City Council
Meeting Agenda
August 27, 2024
6:00 PM
Bentonville City Hall

Note – The public, members of the City Council, and City staff, may have the option to attend this meeting by remote means. For public health reasons, those who attend in person should keep in mind hygiene, the use of facial coverings, and social distancing.

Bentonville residents can make public comments in the following ways:

- Public comments can be made in person at the meeting which is held at 305 SW A Street in Council Chambers.
- Public comments can be submitted by email to cc.comments@bentonvillear.com by at least 4:00 p.m. on the day of the meeting. This email includes the Mayor and City Council email addresses.
- Public comments can be made virtually by registering for the Council meeting at the Zoom link listed below. This requires you to register with your name, address, phone number and email address. The pre-existing limitations (3 minutes) and procedures concerning oral public comments will still apply.

*If you would like to attend virtually, please register at the following link by 4:00 p.m. on August 27, 2024:
https://us02web.zoom.us/webinar/register/WN_3m2Obh-PQHGm-W7ztOzqlA

Council Questions/Discussion Concerning the Business Meeting

Call to Order

Pledge of Allegiance

Moment of Silence

Roll Call

Approval of Minutes - August 13, 2024

I. Carnegie Medal Presentation

II. New Business - Public Comment to be Heard with Agenda Item

1. **Resolution to Declare (37) Tasers as Surplus and Authorize Trade-In for Credit** — **Resolution**

   Resolution to declare (37) tasers as surplus property and available for a law enforcement trade-in program. Upon approval, the tasers can be traded for a credit to Arms Unlimited, Inc. towards law enforcement less lethal equipment. No budget adjustment needed.

2. **Update on Bentonville Business Registry** — **Informational**

A presentation updating City Council on the status of the Bentonville Business Registry.

3. **An Appeal of a Planning Commission Denial of a Rezoning at 515 NW D Street** — **Ordinance***

An ordinance changing real estate in the City of Bentonville, Arkansas, from its present zoning classification of RE, Residential Estate to PRD, Planned Residential Development; and for other purposes. No budget adjustment is needed.

4. **An Appeal of a Planning Commission Denial of a Rezoning at 103 SE 13th Street** — **Ordinance***

An ordinance changing real estate in the City of Bentonville, Arkansas, from its present zoning classification of R-1, Low-Density Single-Family Residential to DN-2, Downtown Medium-Density Residential; and for other purposes. No budget adjustment is needed.

5. **Appointment of Danny Bennett to the Board of Adjustment** — **Appointment**

Appointment of Danny Bennett to the Board of Adjustment to serve as the Planning Commission member on the Board. The term is effective August 27, 2024 and expires December 31, 2029. Commissioner Bennett was recommended by the Planning Commission at their August 6 meeting. This will be Commissioner Bennett's first term on the Board of Adjustment.

6. **Tabled at the August 13, 2024, City Council Meeting: Resolution Adopting a Wayfinding Signage Policy** — **Resolution**

A resolution adopting a Wayfinding Signage Policy that sets forth criteria for destinations to be featured on wayfinding signs, outlines the process for evaluating requests for inclusion, and specifies design standards for the fabrication and installation of these signs. No budget adjustment is needed.

7. **Resolution Endorsing a Temporary OZ Art Loan to Bentonville Public Library - Alchemist Table** — **Resolution**

A resolution endorsing the temporary installation of Paul Gillis' artwork, Alchemist Table (Distillation), in the Bentonville Public Library (BPL) on a one-year loan from OZ Art, LLC. No budget adjustment is needed.

8. **Resolution for an OZ Art Loan to Bentonville Public Library - Untitled Prototype #4 (DIRTY GLOVES)** — **Resolution**

A resolution endorsing the temporary installation of Amanda Ross-Ho's artwork, Untitled Prototype #4 (DIRTY GLOVES), in the Bentonville Public Library (BPL) on a one-year loan from OZ Art, LLC. No budget adjustment is needed.

9. **Resolution for a Temporary Installation of an OZ Art Loan to Bentonville Public Library - Double Dutch** — **Resolution**

A resolution to temporarily install Robin Rhode's artwork, Double Dutch, in the Bentonville Public Library (BPL) on a one-year loan from OZ Art, LLC. No budget adjustment is needed.

10. **Resolution for an OZ Art Loan to Bentonville Public Library - Embroidered Quilt with Earthworms...** — **Resolution**

A resolution to install Daniel Dewar's and Grégory Gicquel's artwork, Embroidered Quilt with Earthworms..., in the Bentonville Public Library (BPL) on a one-year loan from OZ Art, LLC. No budget adjustment is needed.

11. **Resolution for an OZ Art Loan to Bentonville Public Library - Tegyu and Terrin (blue)** — **Resolution**

A resolution to install Claire Tabouret's artwork, Tegyu and Terrin (blue), in the Bentonville Public Library (BPL) on a one-year loan from OZ Art, LLC. No budget adjustment is needed.

12. **Resolution for an OZ Art Loan to Bentonville Public Library - Walk Like an Egyptian** — **Resolution**

A resolution to install Matt Kleberg's artwork, Walk Like an Egyptian (Head to Head), in the Bentonville Public Library (BPL) on a one-year loan from OZ Art, LLC. No budget adjustment is needed.

13. **Resolution approving Installation of Art on Public Property - The Physics of Being** — **Resolution**

A resolution to install Justin Tyler Tate's artwork, The Physics of Being, in Creekside Park. No budget adjustment is needed.

14. **Resolution Setting Public Hearing for Utility/Drainage Easement Vacation (VAC24-0007)** — **Resolution**

Approve Resolution to set Public Hearing for Sept 10, 2024 for a Utility/Drainage Easement Vacation located at Lot 4, Block 3 of Edgar Estates Subdivision (VAC24-0007). No budget adjustment is needed.

15. **Ordinance amending City Pay Plan Creating Communications Manager & Airport Manager Positions** — **Ordinance***

Ordinance amending the City Pay Plan to eliminate the Director of Administration position, creating positions of Communications Manager (grade 33) and Airport Manager (grade 33). A budget adjustment is needed and follows on the next page.

16. **Resolution to Award Bid IFB-24-63 Emergency Waterway Debris Removal & Disaster Recovery** — **Resolution**

Resolution to award bid IFB-24-63 Emergency Waterway Debris Removal and Disaster Recovery Services to Horner Services, LLC per the unit prices attached, in an amount not to exceed $905,008.00. A budget adjustment is needed.

III. Utility Board

1. **Resolution to enter a Master Service Agreement with PSE to Assist BEUD with Future Technology** — **Resolution**

The Master Service Agreement with PSE will allow BEUD to begin implementation of new technology to build on top of the recently installed AMI system. PSE will assist with RFQs/RFPs to select and oversee BEUD's future tech purchases. This firm was selected following the City's Purchasing Policy for professional services. Approved by Utility Board 5-0. No budget adjustment is needed.

2. **Resolution to Award Bid IFB-24-50 to Techline & Arkansas Electric Cooperative for Electric Materials** **Resolution**

Resolution to award bid IFB-24-50-Electric Material to Techline, Inc. and Arkansas Electric Cooperative, Inc. per the unit prices and estimated quantities attached, plus applicable taxes. This bid is to replenish electric stock materials. Approved by Utility Board 5-0. No budget adjustment is needed.

IV. Planning

1. **Lot Split - Lots 5, 6, 7, 8, And 9 Of Featherston Valley Subdivision - Featherston Road and Been Road (LS24-0016)** **Ordinance***

The Planning Commission voted 6-0, recommending approval.

An Ordinance Accepting A Lot Split Of Lot 3 Of Featherston Valley Subdivision Creating New Lots 5, 6, 7, 8, And 9 Of Featherston Valley Subdivision To The City Of Bentonville, Arkansas; And For Other Purposes.

2. **Lot Split - Lots 4, 5, and 6 of Pabst Addition - 4229 Southwest Bright Road (LS24-0023)** **Ordinance***

The Planning Commission voted 6-0, recommending approval.

An Ordinance Accepting A Property Line Adjustment Of Existing Lots 1, 2, And 3 Of Pabst Addition Creating New Lots 4, 5, And 6 Of Pabst Addition To The City Of Bentonville, Arkansas; And For Other Purposes.

3. **Property Line Adjustment - Lots 4 and 5 of Hilldale Subdivision - Ginn Road and Southwest Anglin Road (PLA24-0014)** **Ordinance***

The Planning Commission voted 6-0, recommending approval.

An Ordinance Accepting A Property Line Adjustment Of Lots 1 And 2 Of Hilldale Subdivision Creating New Lots 4 And 5 Of Hilldale Subdivision To The City Of Bentonville, Arkansas; And For Other Purposes.

4. **Future Land Use Map Amendment - Roger J Reid Trust - Residential Estate to Medium Density Residential (MDR) - 8117 Southwest Morning Star Road (RZ24-0025)** **Resolution**

The Planning Commission voted 6-0, recommending approval.

A Resolution Amending The City Of Bentonville Future Land Use Map For A Specific Area From RESIDENTIAL ESTATE To MEDIUM-DENSITY RESIDENTIAL; And For Other Purposes.

5. **Rezoning - Roger J Reid Trust - A-1, Agriculture to R-2, Medium Density Two Family and Townhome Residential - 8117 Southwest Morning Star Road (RZ24-0025)** **Ordinance***

The Planning Commission voted 6-0, recommending approval.

An Ordinance Changing Real Estate In The City Of Bentonville, Arkansas, From Its Present Zoning Classification Of A-1, AGRICULTURAL To R-2, MEDIUM DENSITY TWO FAMILY AND TOWNHOME RESIDENTIAL; And For Other Purposes.

V. Informational Discussion of a Draft Ordinance

1. **Discussion of Active Transportation Committee Creation** — **Informational**

   Discuss creating an Active Transportation Committee and review of draft ordinances.

VI. Other Business/Announcements/Comments

Adjournment

Public Comments Concerning Matters of City Related Business

City of Bentonville, Arkansas Agenda Item Form

Item Details

Council Meeting Date:	8/27/2024	**Submitted By:**	Chief Ray Shastid
Phone:	479-271-3170	**For Department(s):**	Police Department
Email:	ray.shastid@bentonville.arkansas.gov		

Item Type (Check all that apply)

☐ Informational ☐ Bid Award ☐ Enter into an Agreement ☐ Change Order
☐ Recognizing Funds ☐ Budget Adjustment ☐ Waiver of Bid ☐ Emergency Clause
☐ Ordinance ☑ Resolution ☐ Informational

Title, Recommendation & Justification

Title:	Resolution to Declare (37) Tasers as Surplus and Authorize Trade-In for Credit
Action Recommendation & Justification:	Resolution to declare (37) tasers as surplus property and available for a law enforcement trade-in program. Upon approval, the tasers can be traded for a credit to Arms Unlimited, Inc. towards law enforcement less lethal equipment. No budget adjustment needed.
Additional Comments for Consideration (Optional):	Axon declared tasers have a 5 year useful life. Based on the manufacture's recommendation, 37 tasers have been taken out of service since 2007. Surplussing these tasers to allow such a trade-in represents a responsible and safe disposition of specialized police equipment that would otherwise just be destroyed, along with proper disposal of law enforcement only equipment that cannot be publicly sold. Credit per taser is $75.00; total $2,775.00 (See attached list of model and serial number
Amount for Approval:	$

Budget Impact

Is this Item Budgeted? ☐ YES ☐ NO ☑ ITEM HAS NO COST ☐ OTHER:_____

Budget Adjustment *(to be completed by Finance when applicable)*

Account Number (ORG-OBJECT)	Account Description	Expense	Revenue
		$	$
		$	$
		$	$
		$	$

Fund(s) Impacted (check all that apply) ☐ General Fund ☐ Utility Fund ☐ Street Fund ☐ Other(s):_____

Budget Impact Notes for Consideration (Optional):

RESOLUTION NO. _____

A RESOLUTION DECLARING CERTAIN PROPERTY BELONGING TO THE CITY OF BENTONVILLE POLICE DEPARTMENT AS SURPLUS PROPERTY; AUTHORIZING ITS DISPOSAL; AND FOR OTHER PURPOSES.

WHEREAS, the City Council of the City of Bentonville has determined that the (37) thirty-seven tasers identified in **Exhibit "A"** have become obsolete and are surplus items no longer used by the City;

WHEREAS, the items identified in **Exhibit "A"** are to be traded for a credit to Arms Unlimited, Inc. towards law enforcement less lethal equipment;

WHEREAS, this represents a responsible disposal of retired tasers which will also assist with equipping our officers with newer reliable equipment at minimal expense; and

WHEREAS, this Resolution is in accordance with Ark. Code Ann. § 14-54-302(e)(1).

NOW, THEREFORE BE IT RESOLVED BY THE CITY COUNCIL OF THE CITY OF BENTONVILLE, ARKANSAS:

Section 1: The Bentonville Police Department may dispose of its items identified in **Exhibit "A"** in an exchange for a credit to Arms Unlimited, Inc. towards law enforcement less lethal equipment;

Section 2: A record of all items that are exchanged or otherwise disposed of shall be maintained;

Section 3 - Severability Provision: If any part of this Resolution is held invalid, the remainder of this Resolution shall continue in effect as if such invalid portion never existed; and

Section 4 - Repeal of Conflicting Provisions: All Ordinances, Resolutions, or Orders of the City Council, or parts of the same, in conflict with this Resolution are repealed to the extent of such conflict.

PASSED this _____ day of _____, 2024.

APPROVED:

_____
STEPHANIE ORMAN, Mayor

ATTEST:

_____
MALORIE MARRS, City Clerk

EXHIBIT "A"

Model	Serial Number	Status	Firmware version	Date taken out of Service
TASER X26P	X13008P56	Decommisioned, Decommisioned (Storage)	04.039	7-Mar-24
TASER X26P	X13008P3N	Decommisioned, Decommisioned (Storage)	04.039	7-Mar-24
TASER X26P	X13008NYP	Decommisioned, Decommisioned (Storage)	04.039	7-Mar-24
TASER X26P	X13008NYC	Decommisioned, Decommisioned (Storage)	04.039	7-Mar-24
TASER X26P	X13008NY9	Decommisioned, Decommisioned (Storage)	04.039	7-Mar-24
TASER X26P	X13008P18	Decommisioned, Decommisioned (Storage)	04.039	7-Mar-24
TASER X26P	X1300792F	Decommisioned, Decommisioned (Storage)	04.038	19-Jun-23
TASER X26P	X1300792D	Decommisioned, Decommisioned (Storage)	04.038	19-Jun-23
TASER X26P	X1300791E	Decommisioned, Decommisioned (Storage)	04.038	19-Jun-23
TASER X26P	X13007921	Decommisioned, Decommisioned (Storage)	04.038	19-Jun-23
TASER X26P	X1300793T	Decommisioned, Decommisioned (Storage)	04.038	19-Jun-23
TASER X26P	X1300792V	Decommisioned, Decommisioned (Storage)	04.038	19-Jun-23
TASER X26P	X13007920	Decommisioned, Decommisioned (Storage)	04.038	19-Jun-23
TASER X26P	X1300791M	Decommisioned, Decommisioned (Storage)	04.038	19-Jun-23
TASER X26P	X13007922	Decommisioned, Decommisioned (Storage)	04.038	19-Jun-23
TASER X26P	X13007925	Decommisioned, Decommisioned (Storage)	04.038	19-Jun-23
TASER X26P	X1300792H	Decommisioned, Decommisioned (Storage)	04.039	19-Jun-23
TASER X26P	X130034AH	Decommisioned, Decommisioned (Storage)	04.038	10-Jan-17
TASER X26P	X130033T1	Decommisioned, Decommisioned (Storage)	04.038	10-Jan-17
TASER X26P	X1300381R	Decommisioned, Decommisioned (Storage)	04.038	31-Jan-17
TASER X26P	X1300382N	Decommisioned, Decommisioned (Storage)	04.038	31-Jan-17
TASER X26P	X130031V4	Decommisioned, Decommisioned (Storage)	04.038	10-Jan-17
TASER X26P	X1300096K	Decommisioned, Decommisioned (Storage)	04.037	9-Dec-18
TASER X26P	X13001CC9	Decommisioned, Decommisioned (Storage)	04.037	4-Nov-19
TASER X26P	X13001CFE	Decommisioned, Decommisioned (Storage)	04.037	4-Nov-19
TASER X26P	X13001C7M	Decommisioned, Decommisioned (Storage)	04.037	4-Nov-19
TASER X26	X00-232830	Decommisioned, Decommisioned (Storage)	24	Unable to load
TASER X26P	X13000981	Decommisioned, Decommisioned (Storage)	03.041	9-Dec-18
TASER X26P	X13000986	Decommisioned, Decommisioned (Storage)	03.041	9-Dec-18
TASER X26P	X130034C6	Decommisioned, Decommisioned (Storage)	04.037	10-Jan-17
TASER X26P	X13000910	Decommisioned, Decommisioned (Storage)	03.041	9-Dec-18
TASER X26	X00-199115	Decommisioned, Decommisioned (Storage)	22	5-Jul-07
TASER X26	X00-174415	Decommisioned, Decommisioned (Storage)	24	11-Feb-07
TASER X26	X00-228855	Decommisioned, Decommisioned (Storage)	24	15-Dec-07
TASER X26	X00-198199	Decommisioned, Decommisioned (Storage)	22	30-Jun-07
TASER X26	X00-230113	Decommisioned, Decommisioned (Storage)	24	15-Dec-07
TASER X26	X00-198037	Decommisioned, Decommisioned (Storage)	24	30-Jun-07

City of Bentonville, Arkansas Agenda Item Form

Item Details

Council Meeting Date:	8/27/2024	**Submitted By:**	Shelli Kerr
Phone:	479-271-6822	**For Department(s):**	Planning
Email:	skerr@bentonvillear.com		

Item Type (Check all that apply)

☑ **Informational** ☐ **Bid Award** ☐ **Enter into an Agreement** ☐ **Change Order**
☐ **Recognizing Funds** ☐ **Budget Adjustment** ☐ **Waiver of Bid** ☐ **Emergency Clause**

☐ **Ordinance** ☐ **Resolution** ☑ **Informational**

Title, Recommendation & Justification

Title:	Update on Bentonville Business Registry
Action Recommendation & Justification:	A presentation updating City Council on the status of the Bentonville Business Registry.
Additional Comments for Consideration (Optional):	
Amount for Approval:	$

Budget Impact

Is this Item Budgeted? ☐ **YES** ☐ **NO** ☑ **ITEM HAS NO COST** ☐ **OTHER:**_____

Budget Adjustment *(to be completed by Finance when applicable)*

		$	$
Account Number (ORG-OBJECT)	Account Description	Expense	Revenue
		$	$
Account Number (ORG-OBJECT)	Account Description	Expense	Revenue
		$	$
Account Number (ORG-OBJECT)	Account Description	Expense	Revenue
		$	$
Account Number (ORG-OBJECT)	Account Description	Expense	Revenue

Fund(s) Impacted (check all that apply) ☐ **General Fund** ☐ **Utility Fund** ☐ **Street Fund** ☐ **Other(s):**_____

Budget Impact Notes for Consideration (Optional):

City of Bentonville, Arkansas Agenda Item Form

Item Details

Council Meeting Date:	8/27/2024	**Submitted By:**	Tyler Overstreet
Phone:	4792713144	**For Department(s):**	Planning
Email:	toverstreet@bentonvillear.com		

Item Type (Check all that apply)

- [✓] Informational
- [ ] Bid Award
- [ ] Enter into an Agreement
- [ ] Change Order
- [ ] Recognizing Funds
- [ ] Budget Adjustment
- [ ] Waiver of Bid
- [ ] Emergency Clause
- [✓] Ordinance
- [ ] Resolution
- [ ] Informational

Title, Recommendation & Justification

Title:	An Appeal of a Planning Commission Denial of a Rezoning at 515 NW D Street
Action Recommendation & Justification:	An ordinance changing real estate in the City of Bentonville, Arkansas, from its present zoning classification of RE, Residential Estate to PRD, Planned Residential Development; and for other purposes. No budget adjustment is needed.
Additional Comments for Consideration (Optional):	Planning Commission denied this item by a vote of 4-3. The appeal letter and original Planning Commission packet are included as attachments.
Amount for Approval:	$

Budget Impact

Is this Item Budgeted? [ ] YES [ ] NO [✓] ITEM HAS NO COST [ ] OTHER:_____

Budget Adjustment *(to be completed by Finance when applicable)*

Account Number (ORG-OBJECT)	Account Description	Expense	Revenue
		$	$
		$	$
		$	$
		$	$

Fund(s) Impacted (check all that apply) [ ] General Fund [ ] Utility Fund [ ] Street Fund [ ] Other(s):_____

Budget Impact Notes for Consideration (Optional):

ORDINANCE NO. _____

AN ORDINANCE CHANGING REAL ESTATE IN THE CITY OF BENTONVILLE, ARKANSAS, FROM ITS PRESENT ZONING CLASSIFICATION OF R-E, RESIDENTIAL ESTATE TO PRD, PLANNED RESIDENTIAL DEVELOPMENT; AND FOR OTHER PURPOSES.
(PROJECT NUMBER: PRD24-0003)

WHEREAS, Terry and Catherine Suen duly filed a petition with the Planning Commission requesting that the hereinafter described property situated in Benton County, Arkansas, be changed from its present zoning classification of R-E, RESIDENTIAL ESTATE to PRD, PLANNED RESIDENTIAL DEVELOPMENT to be used in accordance with city zoning laws and state laws, which property is described as follows:

LOT 2 OF THE PROPERTY LINE ADJUSTMENT OF PHILLIPS VALLEY ADDITION, BENTONVILLE, BENTON COUNTY, ARKANSAS, AS SHOWN IN PLAT RECORD P3 AT PAGE 957;

WHEREAS, the Planning Commission duly met and considered the application and duly set the petition for public hearing to be held July 16, 2024 in the Council Chambers of the City of Bentonville;

WHEREAS, public notice of said hearing having been published in the Northwest Arkansas Democrat-Gazette for the time and in the manner required by law; and

WHEREAS, the Planning Commission voted to recommend to the City Council that the petition be denied and that said property not be rezoned from its present classification of R-E, RESIDENTIAL ESTATE to PRD, PLANNED RESIDENTIAL DEVELOPMENT.

NOW, THEREFORE, BE IT ORDAINED BY THE CITY COUNCIL FOR THE CITY OF BENTONVILLE, ARKANSAS:

Section 1: That the above described real property is hereby changed from its present zoning classification of R-E, RESIDENTIAL ESTATE to PRD, PLANNED RESIDENTIAL DEVELOPMENT to be used in accordance with the city zoning laws and state laws;

Section 2 - Severability Provision: If any part of this Ordinance is held invalid, the remainder of this Ordinance shall continue in effect as if such invalid portion never existed; and

Section 3 - Repeal of Conflicting Provisions: All Ordinances, Resolutions, or Orders of the City Council, or parts of the same, in conflict with this Ordinance are repealed to the extent of such conflict.

PASSED AND APPROVED this_____ day of _____, 2024.

APPROVED:

_____
Stephanie Orman, Mayor

ATTEST:

_____
Malorie Marrs, City Clerk

MARK RUSSELL
HOMES

848 NW C Street
Bentonville, AR 72712

August 9, 2024

Dear City Council Members,

At the July 16 Planning Commission meeting, PRD24-0003 was denied with a 4-3 vote. The PRD proposed construction of 36 homes across the four-acre site at 515 NW D St, and the design was crafted with sensitivity to our town's increasing housing needs, neighborhood development concerns, and a desire to preserve and enhance the natural valley as a public amenity. The proposal was within the description of the current land use map indicating medium density is appropriate for the area. Respectfully, I would like to appeal the decision made by the Planning Commission.

During much thoughtful discussion from staff, commissioners and neighbors at the meeting, it appeared that the commission liked the project but was empathetic to neighborhood concerns primarily around school traffic at drop off and pick up times from car riders backing up onto NW 9th and NW D St. This is an existing condition that is common at many of our schools, and while it is an understandable frustration, it should not be the reason to discourage good new developments. There are multiple ways in and out of the neighborhood. Additional housing nearby schools may also alleviate school traffic considering that more school children living in proximity may be able to walk or bike to school instead of drive. Regardless of this specific project, housing near schools is nearly always desirable both from a city planning perspective and from a market/homeowner perspective. It is one of many reasons I chose to build my own home nearby on NW C St where my kids could potentially walk or bike to an elementary, middle, and junior high school all within 5-10min.

There were a handful of other concerns and questions brought up by neighbors—mentions of natural conservation, infrastructure, timing of notices for rezoning, safety, distaste for construction in general, city right-of-way expansions and imminent domain, parking, and changing neighborhood appearance, but the school pick-up pattern was the most recurring concern. The commissioners had brief discussion and addressed many of these items in a positive way—indicating that the Large Scale Development process would require any developer to address infrastructure, drainage, and safety, and allowing all city departments to weigh in on both citywide and neighborhood specific design concerns and requirements.

MARK RUSSELL
HOMES

848 NW C Street
Bentonville, AR 72712

Ultimately, I did not hear specific feedback from the commissioners that would have guided me in updating or revising the proposed design and zoning, and the request as it stands is in line with the PRD requirements, land use map, and in general harmony with the area and intent of the code. This is the reason for my appeal, and my hope is that, with your approval, I will be able to move forward in designing the project in more detail, in collaboration with staff and commissioners through the large scale review process.

I heard many positive comments from commissioners, and the staff report was also recommending approval of the project. I am also empathetic to concerns from my neighbors and will do my best to mitigate the pain of having construction near existing homes. My PRD application packet includes the reasons I feel the project is a positive for the health, safety, and welfare of our community. As a builder and developer, I would not bring a project forward that I did not wholeheartedly believe would be a positive for our city and for my own neighborhood. Thank you for considering this appeal.

Respectfully,
Mark Haney

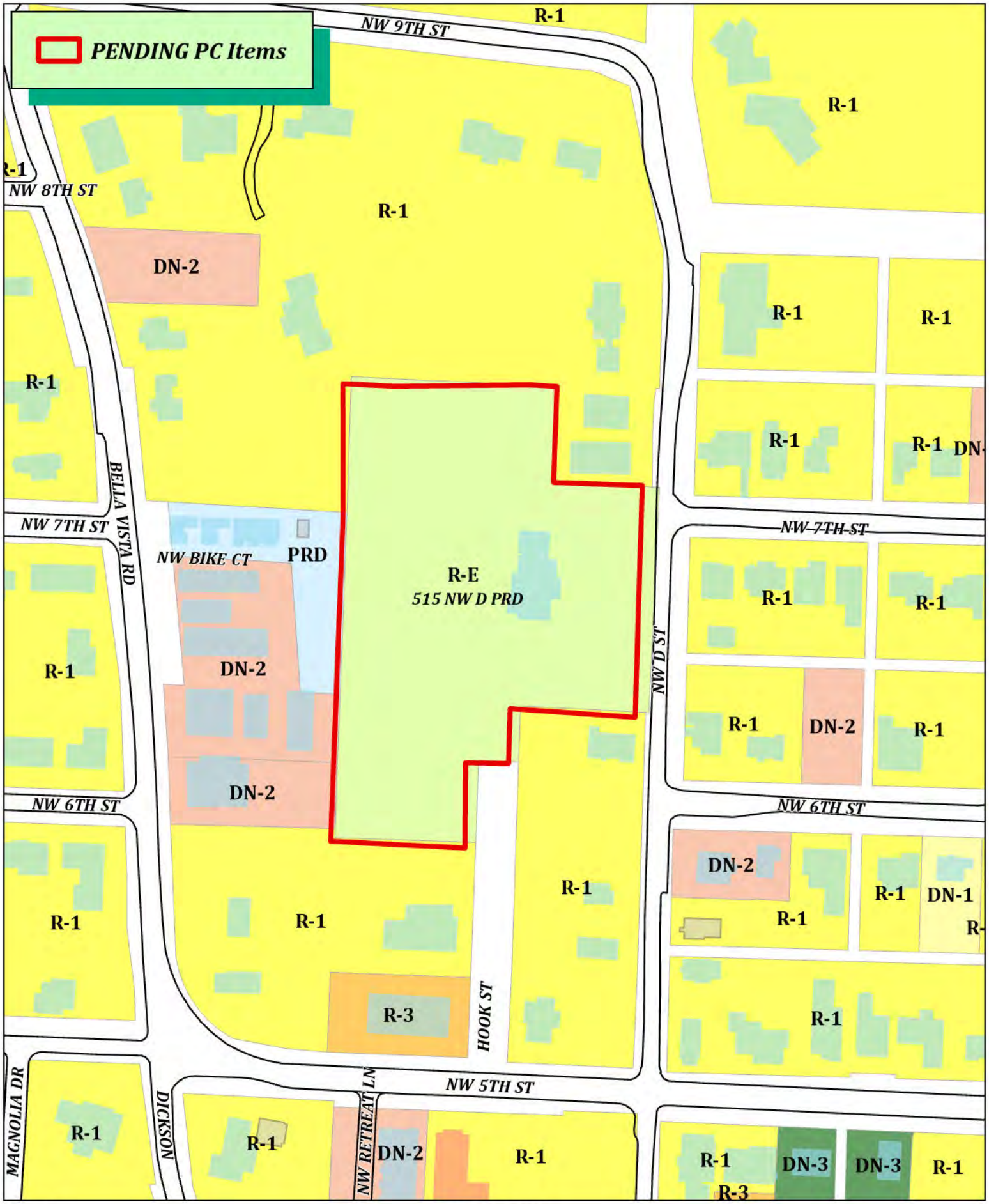

PRD24-0003
515 NW D PRD
PLANNED RESIDENTIAL DEVELOPMENT

MARK RUSSELL
HOMES

515 NW D St Bentonville PRD Application
Mark Haney
Jun 12, 2024

"Catalpa Cottages"

515 NW D St Planned Residential Development Application

The Catalpa Cottages will provide a variety of housing types within one of Bentonville's most treasured residential areas, while preserving the unique natural features of this site, including Black Apple Creek's headwaters and existing tree canopy within the valley. The proposed development features of mix of townhomes ranging from 1-3 bedroom options with one and two car garages. The homes are designed to maximize views and access to the valley as a shared neighborhood amenity to foster community and promote a strong sense of place. There are no waivers, variances and/or conditional uses at the time of preparing this plat or plan. The current zoning is Residential Estate and current land use map indicates medium density residential.

Phasing Plan

The Southwest corner, including townhomes "G" and "H" along with the associated street and utilities including Hook St may be developed as a second phase, pending feasibility of the project as a whole. See attached Master Site Plan and architectural elevations for all proposed structures, streets, and lot lines.

Development Criteria for Catalpa Cottages PRD

1. Common open space
    a. The "Shared Community Commons" of ~1.3 acre (33%) will be permanently devoted to common usable open space, maintained by the POA
    b. Equitable distribution – the open space is primarily the valley in the center of the parcel, with additional walking trails, terraced landscaping, and side yards distributed between the proposed structures
    c. Preservation – the Property Owner Association will maintain the common open space, and the POA agreements may be reviewed by Bentonville Planning staff prior to certificate of occupancy
    d. Accessibility – Common open space shall be open to residents within the PRD and the general public
    e. Common open space allocations (rough estimates)
        i. Wetlands and water bodies – 5% (wet weather natural low area)
        ii. Lawns – 5%
        iii. Pedestrian paths – 5%
        iv. Central gathering spaces – 65% (existing valley, to be enhanced with additional landscaping, seating, and other features to create a park-like feel)
        v. Landscape areas – 20%
        vi. Recreational areas/facilities – no formal facilities, but the central gathering space may be used for outdoor recreation (picnic, play and relax areas), and a basketball hoop will be added between townhome structures in the Southwest corner on the fire hammerhead turnaround pavement area
2. Parking and off-street loading
    a. Two (2) off street parking spaces are provided for 21 of the proposed 36 homes with two car attached garages. One (1) off street parking spaces are provided for 15 of the proposed 36 homes with one car attached garages. The 15 homes with one car garages include only one bedroom homes. The parking ratio is 1.58.
3. Perimeter requirements

a. Proposed setbacks are described on the site plan and there is no minimum setback requirement. On the NW D frontage, front buildings will be at least 20′ away from overhead power lines in the right of way, per BEUD requirements. All other setback minimums will be 0′, but the homes and lots are designed to allow for side yards, utilities, and buffers between adjacent properties as labeled on the site plan with varying setbacks designed accordingly. Building heights will not exceed 40′, with all eaves under 30′ for fire access.
b. Within this PRD, there are no lot area, width, or ROW frontage requirements or minimums. All proposed lot sizes are indicated on the site plan.

4. Density
    a. The proposed density is 36 homes on 4 acres, or 9 per acre. This is less than the suggested 10-12 homes per acre in medium density land use areas as the land use map designates this parcel.
5. Authorization of housing types
    a. All housing types proposed are single family townhomes for sale or lease individually and the majority will be constructed on their own lots, each with public right-of-way frontage as shown on the site plan. Buildings "E" and "F" are proposed as a Horizontal Property Regime condos to allow for more efficient utility design, thus Condos, two family, and multifamily structures are a permissible housing type within this PRD along with townhomes and single family homes. The housing type in the vast majority of the surrounding neighborhood is single family detached homes, with a handful of small multifamily and townhome lots. By providing townhomes and condos in this highly residential area, we will diversify the housing product available in the neighborhood while retaining the residential character. By providing 1 bed, 2 bed, and 3 bed options, a variety of sizes and price points will be available. Residential accessory structures and dwelling units including sheds, garages, carports, and guest houses are permissible as long as they conform to POA guidelines. Home occupations including Type A and Type B are permissible. Any homeowner wishing to have a Type B home occupation must secure a conditional use permit per the requirements of Land Development Code Sec 601.12.
6. Structural design standards
    a. The homes are entirely designed around the natural site conditions, including the frontage on NW D, secondary access via Hook St, and a valley that holds the headwaters of Black Apple Creek. The homes are connected via a series of public alleys for mirrored garage access, with frontages proposed to face the valley/common green, NW D, or in the case of the "F" block of townhomes, a small shared front yard area. All structures will be designed in the style of the elevations and watercolor included in this application, featuring full brick veneer and hardi-board trim accents with thoughtfully designed gables, dormers, and front entry. There will be minor variations in the building heights and roofline articulation as indicated on the elevations, and according to the size of each home ranging from 1-3 bedroom. All homes include rear-loading garages access from a shared public alley in order to maximize views over the valley, efficiency in utility design, and constraints of the site's unique shape and topography.

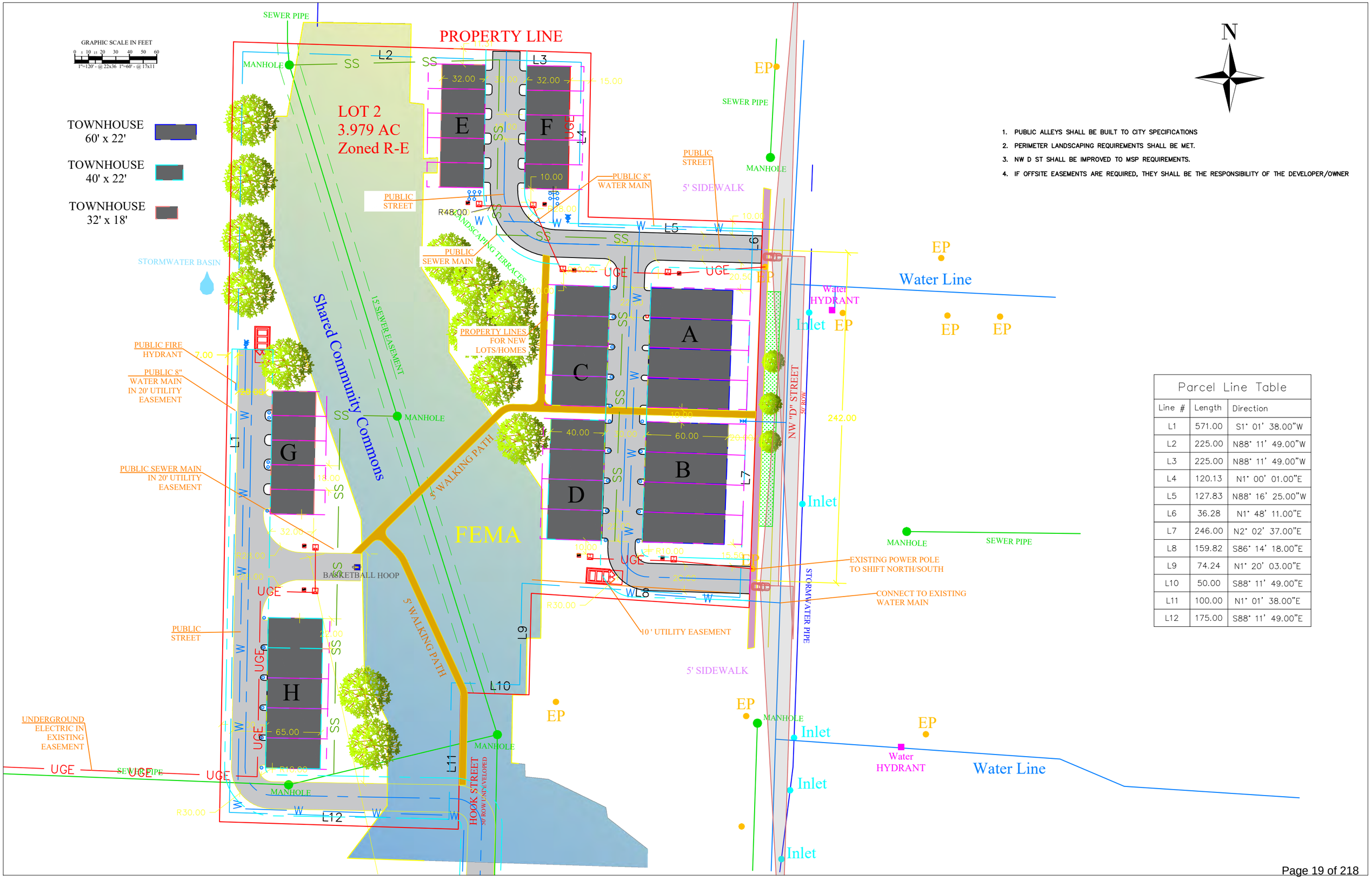

1. PUBLIC ALLEYS SHALL BE BUILT TO CITY SPECIFICATIONS
2. PERIMETER LANDSCAPING REQUIREMENTS SHALL BE MET.
3. NW D ST SHALL BE IMPROVED TO MSP REQUIREMENTS.
4. IF OFFSITE EASEMENTS ARE REQUIRED, THEY SHALL BE THE RESPONSIBILITY OF THE DEVELOPER/OWNER

Parcel Line Table

Line #	Length	Direction
L1	571.00	S1° 01' 38.00"W
L2	225.00	N88° 11' 49.00"W
L3	225.00	N88° 11' 49.00"W
L4	120.13	N1° 00' 01.00"E
L5	127.83	N88° 16' 25.00"W
L6	36.28	N1° 48' 11.00"E
L7	246.00	N2° 02' 37.00"E
L8	159.82	S86° 14' 18.00"E
L9	74.24	N1° 20' 03.00"E
L10	50.00	S88° 11' 49.00"E
L11	100.00	N1° 01' 38.00"E
L12	175.00	S88° 11' 49.00"E

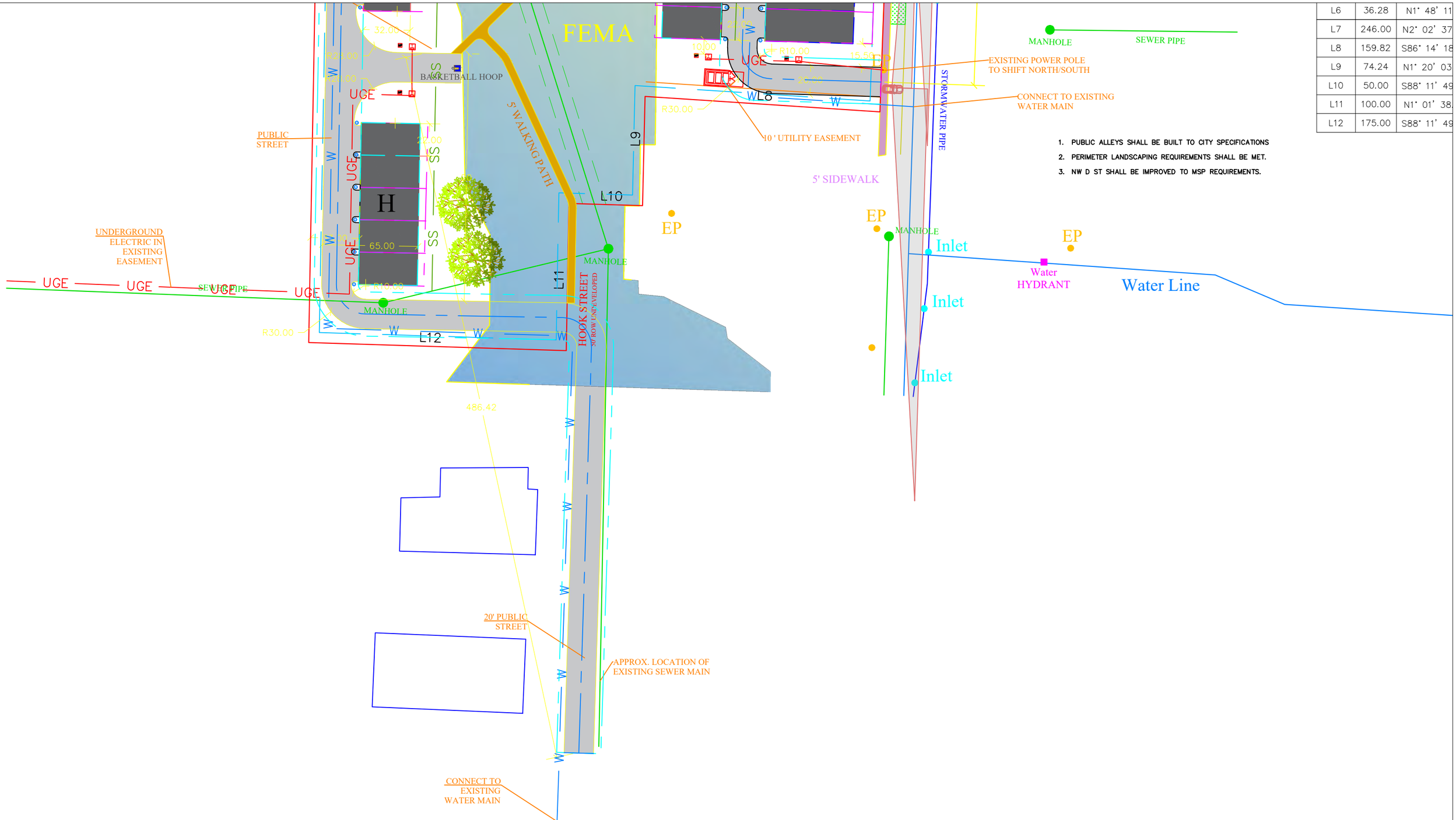

L6	36.28	N1° 48' 11
L7	246.00	N2° 02' 37
L8	159.82	S86° 14' 18
L9	74.24	N1° 20' 03
L10	50.00	S88° 11' 49
L11	100.00	N1° 01' 38.
L12	175.00	S88° 11' 49

1. PUBLIC ALLEYS SHALL BE BUILT TO CITY SPECIFICATIONS
2. PERIMETER LANDSCAPING REQUIREMENTS SHALL BE MET.
3. NW D ST SHALL BE IMPROVED TO MSP REQUIREMENTS.

BOUNDARY, TOPOGRAPHIC & TREE LOCATION SURVEY

TREE INVENTORY

#	DBH	SPECIES	CANOPY
1.	30"	ELM	80'
2.	36"	ELM	80'
3.	24"	HORNBEAM	40'
4.	16"	PECAN	40'
5.	20"	DBL ELM	75'
6.	16"	DBL BLACK CHERRY	45'
7.	14"	MAPLE	45'
8.	28"	ELM	60'
9.	16"	PECAN	45'
10.	12"	ELM	35'
11.	12"	HICKORY/PECAN	20'
12.	06"	DOGWOOD	15'
13.	12"	DOGWOOD	20'
14.	03"	DBL DOGWOOD	15'
15.	32"	POST OAK	70'
16.	08"	HICKORY	20'
17.	30"	POST OAK	50'
18.	26"	CATALPA	45'
19.	18"	MAPLE	55'
20.	30"	CATALPA	40'
21.	40"	CATALPA	45'
22.	26"	PIN OAK	60'
23.	16"	CATALPA	40'
24.	14"	BLACK WALNUT	30'
25.	16"	BLACK WALNUT	30'
26.	12"	BLACK WALNUT	30'
27.	20"	CATALPA	25'
28.	10"	MULBERRY	35'
29.	12"	ELM	45'
30.	12"	BOX ELDER MAPLE	25'
31.	20"	CATALPA	40'
32.	16"	CATALPA	30'
33.	08"	DOGWOOD	15'
34.	08"	DBL REDBUD	20'
35.	10"	REDBUD	20'
36.	10"	EUROPEAN ASPEN	20'
37.	12"	BRADFORD PEAR	20'
38.	16"	PINE	35'
39.	24"	BLACK WALNUT	45'
40.	30"	ELM	55'
41.	26"	ELM	60'
42.	16"	ELM	45'

SANITARY SEWER INVERT INFORMATION:

SSMH #1:
RIM ELEV. 1267.48'
8" VCP IN (W) 1263.80'
8" VCP OUT (E) 1263.56'

SSMH #2:
RIM ELEV. 1259.46'
8" PVC IN (SW) 1253.57'
8" PVC IN (SW) 1255.10'
4" PVC IN (NE) 1253.56'
12" PVC IN (S) 1252.87'
10" PVC OUT (NW) 1252.76'

SSMH #3:
RIM ELEV. 1251.74'
10" VCP IN (SE) 1247.82'
10" VCP OUT (NW) 1247.79'

SSMH #4:
RIM ELEV. 1248.77'
10" VCP IN (SE) 1242.49'
10" VCP OUT (N) 1242.40'

FIELD WORK:
MARCH 28,
APRIL 9,10 & 11, 2024

BASIS OF BEARING:
GPS OBSERVATION - AR NORTH ZONE
NAD83(2011) HORIZONTAL DATUM

BASIS OF ELEVATION:
ON-SITE NETWORK GPS OBSERVATION
NAVD88 VERTICAL DATUM

CONTOUR INTERVAL:
1 FOOT

PROPERTY ZONED:
R-E, RESIDENTIAL ESTATE

BUILDING SETBACKS:
FRONT 30ft
SIDE INTERIOR 30ft
SIDE EXTERIOR 30ft
REAR 30ft

GARAGE SETBACK STANDARDS:
(APPLICABLE TO ATTACHED AND DETACHED GARAGES)

GARAGE, STREET FACING:
30ft FROM THE PROPERTY LINE THE GARAGE FACES

GARAGE, SIDE OR REAR LOADING:
20ft FROM THE FACING PROPERTY LINE

GARAGE, ALLEY FACING:
20ft FROM PROPERTY LINE AT ALLEY

ACCESSORY STRUCTURES (I.E. GARAGES, STORAGE SHEDS, SEPARATE DWELLING UNITS):

DETACHED NON-RESIDENTIAL & DETACHED ACCESSORY DWELLING:
FRONT AS REQUIRED BY DISTRICT
SIDE 07ft
REAR 07ft

ATTACHED ACCESSORY DWELLING:
FRONT AS REQUIRED BY DISTRICT
SIDE AS REQUIRED BY DISTRICT
REAR AS REQUIRED BY DISTRICT

*ON CORNER LOTS: STRUCTURE SHALL NOT PROJECT BEYOND THE BUILDING LINE OF THE PRIMARY STRUCTURE ON THE ADJACENT LOT

REFERENCE DOCUMENTS:
1) REPLAT OF SURVEY FILED IN BOOK P3 AT PAGE 957
2) PLAT OF SURVEY FILED IN BOOK 18 AT PAGE 121
3) PLAT OF SURVEY FILED IN BOOK 2017 AT PAGE 582
4) PLAT OF SURVEY FILED IN BOOK 18 AT PAGE 6481
5) PLAT OF SURVEY FILED IN BOOK 2022 AT PAGE 10256456
6) PLAT OF SURVEY FILED IN BOOK L2020 AT PAGE 67702
7) PLAT OF SURVEY FILED IN BOOK L2021 AT PAGE 58717
8) PLAT OF SURVEY FILED IN BOOK L2023 AT PAGE 02877
9) PLAT OF SURVEY FILED IN BOOK 2017 AT PAGE 280
10) PLAT OF SURVEY FILED IN BOOK 20 AT PAGE 210
11) PLAT OF SURVEY FILED IN BOOK 2023 AT PAGE 09011408
12) PLAT OF SURVEY FILED IN BOOK L2020 AT PAGE 39972
13) WARRANTY DEED FILED IN BOOK 2013 AT PAGE 33662
14) COMMITMENT FOR TITLE INSURANCE FILE NO. 23-1901 AND ALL OF THE DOCUMENTS CONTAINED THEREIN

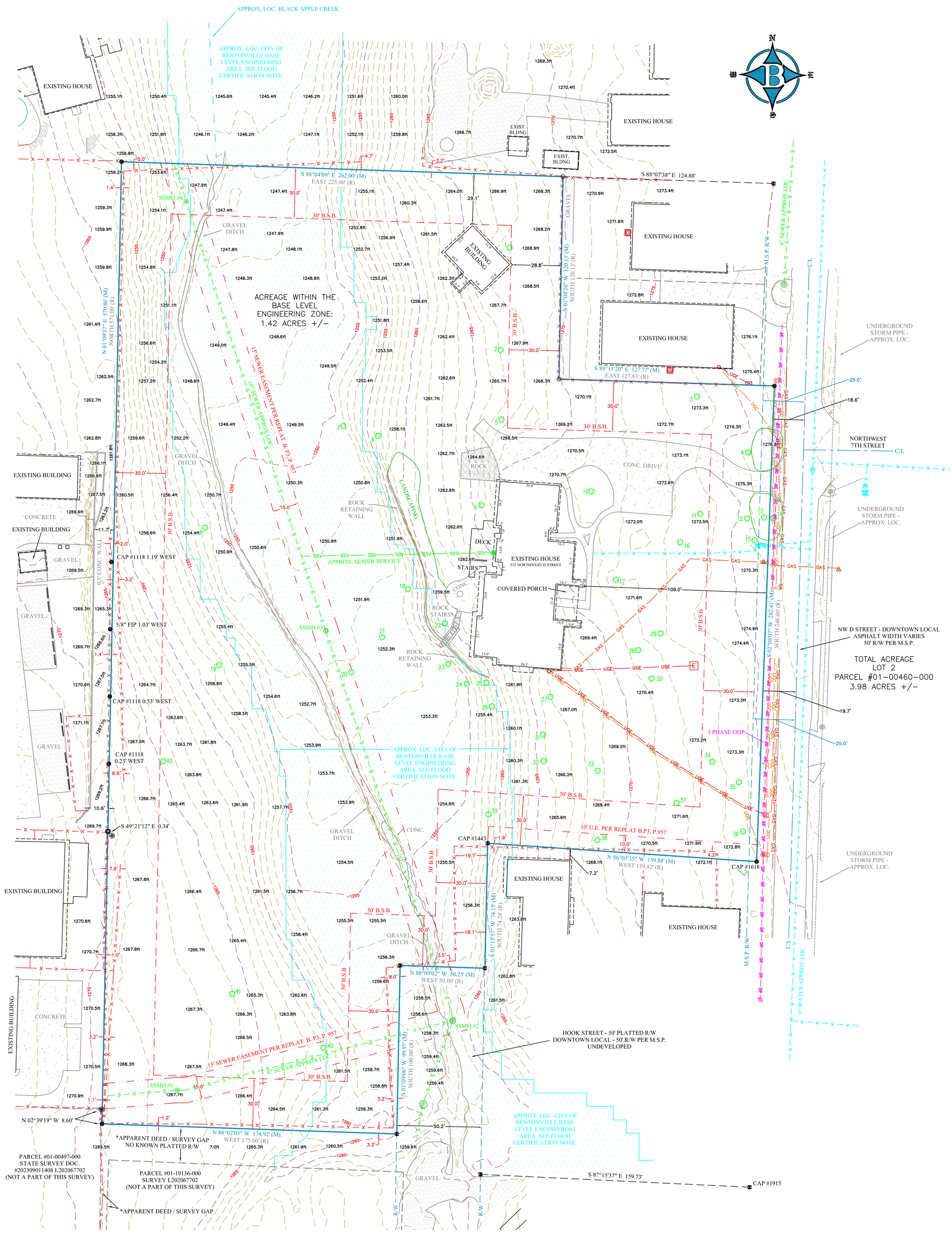

VICINITY MAP

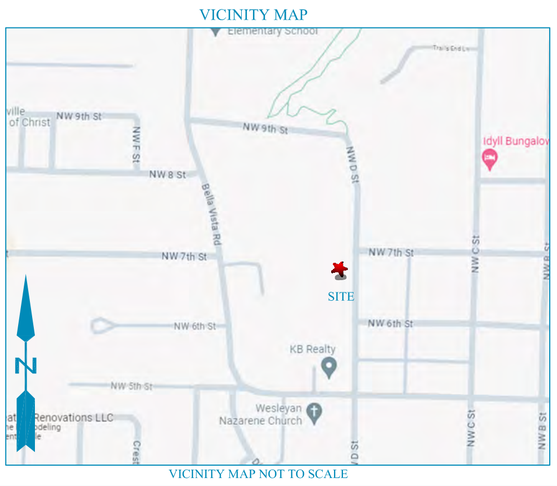

VICINITY MAP NOT TO SCALE

EXISTING WARRANTY DEED DESCRIPTION (B. 2013, P. 33662):
LOT 2 OF THE PROPERTY LINE ADJUSTMENT OF PHILLIPS VALLEY ADDITION, BENTONVILLE, BENTON COUNTY, ARKANSAS, AS SHOWN IN PLAT RECORD P3 AT PAGE 957. SUBJECT TO ALL EASEMENTS AND RIGHT-OF-WAY OF RECORD.

PLAT NOTES:
1) RECORD (R) BEARINGS AND DISTANCES ARE SHOWN PER REPLAT FILED IN BOOK P3 AT PAGE 957.

2) SOME FEATURES AND/OR SYMBOLS ON THIS PLAT MAY BE SHOWN OUT OF SCALE FOR VISUAL CLARITY.

3) THE LOCATION OF UTILITIES SHOWN HEREON ARE FROM OBSERVED EVIDENCE OF ABOVE GROUND APPURTENANCES, GPRS UTILITY LOCATION, GIS, AND/OR UTILITY MAPS PROVIDED BY LOCAL UTILITY COMPANIES. NOT ALL UTILITY COMPANIES MAY HAVE RESPONDED TO OUR REQUEST FOR MAPS AND/OR INFORMATION. ALL UTILITY LINES APPEARING ON THIS PLAT, AS WELL AS THOSE THAT MAY EXIST UNDERGROUND NEED TO BE VERIFIED PRIOR TO DOING ANY TYPE OF EXCAVATION OR DESIGN. SOME UTILITY LINES MAY ALSO EXIST THAT WERE NOT SHOWN ON THIS PLAT.

4) THE TREE SPECIES LISTED ON THIS PLAT WERE DETERMINED TO THE BEST OF OUR KNOWLEDGE AND ABILITY. SOME TREES ON THIS PLAT MAY NOT BE THE EXACT SPECIES LISTED. PLEASE CONSULT A LICENSED ARBORIST IF EXACT TREE SPECIES ARE NEEDED.

FLOOD CERTIFICATION:
NO PORTION OF THIS PROPERTY IS LOCATED WITHIN FLOOD ZONE "A" OR "AE" AS DETERMINED BY THE NATIONAL FLOOD INSURANCE PROGRAM FLOOD INSURANCE RATE MAP FOR BENTON COUNTY, ARKANSAS. (FIRM PANEL #05007C0090J. DATED 09/28/2007)

A PORTION OF THIS PROPERTY IS WITHIN THE CITY OF BENTONVILLE'S BASE LEVEL ENGINEERING (BLE) AREA, WHICH IDENTIFIES ADDITIONAL AREAS OUTSIDE OF THE SPECIAL FLOOD HAZARD AREAS THAT ARE SUBJECT TO PERIODIC FLOODING EVENTS THAT RESULT IN LOSS OF LIFE OR PROPERTY, POSE HEALTH AND SAFETY HAZARDS, DISRUPT COMMERCE AND GOVERNMENTAL SERVICES, AND CAUSE EXTRAORDINARY PUBLIC EXPENDITURES FOR FLOOD PROTECTION AND RELIEF, ALL OF WHICH ADVERSELY AFFECT THE PUBLIC HEALTH, SAFETY, AND GENERAL WELFARE.

FOR MORE INFORMATION ON THE BENTONVILLE BASE LEVEL ENGINEERING AREAS, PLEASE VISIT:

https://www.bentonvillear.com/DocumentCenter/View/10027/Ord-No-2022-099_BLE-Flood-data

AND

https://webapps.usgs.gov/infrm/estBFE/.

0' 30' 60' 90'

GRAPHIC SCALE (IN FEET)
1 Inch = 30ft.

I HEREBY CERTIFY THIS TO BE TRUE AND CORRECT TO THE BEST OF MY KNOWLEDGE AND BELIEF ON THIS THE 11TH DAY OF APRIL, 2024.

CERTIFICATE OF AUTHORIZATION
BATES & ASSOCIATES, INC.
#1335
ARKANSAS ENGINEER

REGISTERED PROFESSIONAL LAND SURVEYOR
STATE OF ARKANSAS
NO. 1642
SIGNATURE
DERRICK L. THOMAS

IF THE SIGNATURE ON THIS SEAL IS NOT AN ORIGINAL AND NOT BLUE IN COLOR THEN IT SHOULD BE ASSUMED THAT THIS PLAT MAY HAVE BEEN ALTERED. THE ABOVE CERTIFICATION SHALL NOT APPLY TO ANY COPY THAT DOES NOT BEAR AN ORIGINAL SEAL AND SIGNATURE.

DRAWING #24-053

FOR USE AND BENEFIT OF:
MARK HANEY

ADDRESS:
515 NORTHWEST D SREET
BENTONVILLE, ARKNASAS

DATE: 05/23/24	SCALE:	1"=30'
LOCATION: LOT 2 PHILLIPS VALLEY ADDITION	SURVEYED:	RW
	DRAFTED:	HH
	REVIEWED:	DT
	COA #1335	

BATES Engineers · Surveyors
7230 S. Pleasant Ridge Dr. · Fayetteville, Arkansas 72704 · 479.442.9350

BATES & ASSOCIATES, INC. Copyright 2024
This survey was conducted for the person or persons whose name(s) appear on this plat. This plat is protected by copyright. No one including the person(s) named may reproduce this plat without the express written consent of Bates & Associates, Inc. Surveyor has made no independent investigation for easements of record, encumbrances, restrictive covenants, ownership title evidence, or any other fact which a complete and accurate title search may disclose. Any flood statement provided on this plat is for information only and Bates & Associates, Inc. assumes no liability for the correctness of the hereon cited maps, furthermore the above statement does not represent the opinion of Bates & Associates, Inc. of the probability of flooding.

LEGEND:
THESE STANDARD SYMBOLS WILL BE FOUND IN THE DRAWING.

(R) RECORD BEARING & DISTANCE
(M) MEASURED BEARING & DISTANCE
FOUND 5/8" REBAR
SET 5/8" REBAR/CAP
FOUND PIPE
FOUND AXLE
FOUND 1/2" REBAR
FOUND 3/8" REBAR
CABLE PEDESTAL
ELECTRICAL METER
ELECTRICAL BOX
ELECTRICAL OUTLET/FLAGPOLE
POWER POLE
GUY ANCHOR
GAS METER
CLEANOUT
SANITARY SEWER MH
GRATED INLET
WATER METER
FIRE HYDRANT
WATER VALVE
TREE
BOUNDARY LINE (MEASURED)
CENTERLINE OF ROAD
RIGHT-OF-WAY
CABLE/COMMUNICATION LINE
UNDERGROUND ELECTRIC
GAS LINE
WATER LINE
WATER SERVICE LINE
SEWER LINE
SEWER SERVICE LINE
OVERHEAD POWER LINE
GUY WIRE
FLOW LINE
FENCE
UTILITY EASEMENT
BUILDING SETBACK

3 bedroom home elevation, typ

3 bedroom home elevation, typ
full brick veneer

2 bedroom home elevation, typ
full brick veneer

1 bedroom home elevation, typ
full brick veneer

NOTICE OF INTENT TO REZONE

Mark Russell LLC has requested the Bentonville Planning Commission to set a public hearing date to consider rezoning the following property from

R-E, Residential Estate to PRD, Planned Residential Development

The legal description of the property is as follows:

Lot 2 of the Property Line Adjustment of Phillips Valley Addition, Bentonville, Benton County, Arkansas, as shown in Plat Record P3 at Page 957

The common description of the property is: 515 NW D St

The public hearing will be held July 16, 20 24 at 5:00 p.m. It will be held at 305 S.W. "A" Street.

This notification is in response to the requirement that all property owners within 200 feet of said property must be notified. If you wish to express any comments about the requested rezoning, you may respond by the following methods:

1. Attend the public hearing and express your views.
2. Express your opinion in writing to the Planning Commission. You may mail this or deliver it to the City of Bentonville Planning Department, 305 SW A Street, Bentonville, AR 72712.
3. Use the bottom of this form to express your opinion by checking the appropriate box. (This may also be delivered or mailed to the above address.)

For more information, you may call the Planning Department at (479)271-3122.

- -

I/We have received notice of the public hearing for the rezoning of the above described property and:

☐ I / we have no objections to the rezoning.
☒ I / we object to the rezoning because:

1) Currently Zone Residential RE. 2) overlooking All local ut. lites 3) Currently The Area Has 35 Residences - 26 are R-1 (75%) The Proposed 36 units will More Than Double The Density in The proposed Area Alone. 4) No Valid Reason to increase density other than making The Numbers work, leaving The Current Residents with a Result that is not a good Solution. Please Reject!!

[redacted]

Signature and Physical Address

[redacted]

5) Traffic by Thomas Jefferson + Sugar Creek elementary schools is already a huge issue - Doubling the density is only going to make this worse!

NOTICE OF INTENT TO REZONE

Mark Russell LLC has requested the Bentonville Planning Commission to set a public hearing date to consider rezoning the following property from

R-E, Residential Estate to PRD, Planned Residential Development

The legal description of the property is as follows:

Lot 2 of the Property Line Adjustment of Phillips Valley Addition, Bentonville, Benton County, Arkansas, as shown in Plat Record P3 at Page 957

The common description of the property is: 515 NW D St

The public hearing will be held July 16, 2024 at 5:00 p.m. It will be held at 305 S.W. "A" Street.

This notification is in response to the requirement that all property owners within 200 feet of said property must be notified. If you wish to express any comments about the requested rezoning, you may respond by the following methods:

1. Attend the public hearing and express your views.
2. Express your opinion in writing to the Planning Commission. You may mail this or deliver it to the City of Bentonville Planning Department, 305 SW A Street, Bentonville, AR 72712.
3. Use the bottom of this form to express your opinion by checking the appropriate box. (This may also be delivered or mailed to the above address.)

For more information, you may call the Planning Department at (479)271-3122.

I/We have received notice of the public hearing for the rezoning of the above described property and:

☐ I / we have no objections to the rezoning.
☒ I / we object to the rezoning because:

traffic, roads aren't built to accomodate this additional housing

[redacted]

Signature and Physical Address

[redacted]

Signature and Physical Address

72712

NOTICE OF INTENT TO REZONE

Mark Russell LLC has requested the Bentonville Planning Commission to set a public hearing date to consider rezoning the following property from

R-E, Residential Estate to PRD, Planned Residential Development

The legal description of the property is as follows:

Lot 2 of the Property Line Adjustment of Phillips Valley Addition, Bentonville, Benton County, Arkansas, as shown in Plat Record P3 at Page 957

The common description of the property is: 515 NW D St

The public hearing will be held July 16, 20 24 at 5:00 p.m. It will be held at 305 S.W. "A" Street.

This notification is in response to the requirement that all property owners within 200 feet of said property must be notified. If you wish to express any comments about the requested rezoning, you may respond by the following methods:

1. Attend the public hearing and express your views.
2. Express your opinion in writing to the Planning Commission. You may mail this or deliver it to the City of Bentonville Planning Department, 305 SW A Street, Bentonville, AR 72712.
3. Use the bottom of this form to express your opinion by checking the appropriate box. (This may also be delivered or mailed to the above address.)

For more information, you may call the Planning Department at (479)271-3122.

I/We have received notice of the public hearing for the rezoning of the above described property and:

☐ I / we have no objections to the rezoning.
☒ I / we object to the rezoning because:

See attached letter

[redacted]

Signature and Physical Address

[redacted]

Signature and Physical Address

July 8, 2024

Dear Bentonville Planning Commision,

We are writing you today to express our opposition to the proposed residential development at 515 D Street. Our neighborhood was one of the hardest hit during the May 26th storms. Today, if you walk down D street where the property borders, you'll find piles and piles of dead tree limbs on the sidewalk. Our once extensive tree canopy around the entrance to the Black Apple Creek trail is nearly obliterated. Widow makers still tower over 9th street and Hook St. There are mountains of debris piled up on 7th and Walton, and the neighborhood looks exposed and broken. Roofs remain tarped. Park Springs Park - a jewel in the neighborhood - has been roped off this summer, deemed too unsafe to enter. Somehow the spectacular old growth trees in the field of the 515 property have survived. Today the shade of the trees and the creek are a refuge for hawks, deer, foxes, and countless fireflies. Will they survive two new roads and 36 new homes? That remains to be seen. While the developer claims to have the interests of the open space in mind, he also plans to build on a wetland/grassland habitat that's never been developed. The creek, field, and trees are home to abundant wildlife which will be displaced by digging foundations, building erosion control structures, paving roads, adding urban heat, and pollution regardless of whatever small "common area" might be allowed between large multi level townhouse units and their access roads. Replacing the natural habitat with juvenile trees and decorative landscaping simply will not bring this wildlife back. Buildings will cover the grassland that is currently home to many animals and stores a significant amount of carbon. For environmental reasons alone, this unique space should be valued and conserved.

Yet, there are other practical reasons the PRD should not be approved. Traffic congestion needs to be addressed. The main outlets for the proposed development are D st and Hook st. D street is a key avenue for school pickup traffic, cars line up and down the street blocking driveways each day to access Thomas Jefferson Elementary. Drivers have a blind curve going up the hill of 9th street and the sidewalk network is incomplete. Pedestrian and vehicle safety are already compromised during peak traffic times. We can expect this issue to continue to worsen as more development occurs in the area, most notably the approved Remote Hub at 7th and Walton which is expected to have 292 residential units. This development is blocks away from the proposed PRD. It is not realistic to expect less car use in the nearterm. ORT does not service at a reliable schedule, and while downtown is walking distance, access to doctors' offices, work, nature trails, and community events may be outside safe walking/biking range. Weather also inhibits safe bike and pedestrian travel often in Arkansas summers and winters. The average American household owns 2.28 vehicles. The parking ratio in the proposed PRD is 1.58. Where will the additional cars park? Likely on D st where access and congestion are already daily battles.

Wastewater also must be addressed more comprehensively. Currently, some of the proposed units are below the grade for the sewer line. Will the developer build a pumphouse to direct the sewage? Will each unit below grade have its own electric pump? When the power goes out and

36 homes potentially are pumping their own wastewater - what happens? Does the sewage overflow into the creek?

Stormwater also needs to be addressed. Adding new structures and roads to a natural drainage spot will change the way stormwater will drain in the area. Does this fit with the infrastructure developed on 5th st, or will the city have to invest more money into stormwater so this developer can make the biggest return on his investment. The map on the plan has FEMA shaded around the common area - is this a FEMA flood zone? Please address this before planning to build houses next to it and roadways over it.

Land use - the developer and the planning department have suggested that this fits with medium density outlined in the community plan. However, this address is listed for one single family unit. This PRD will increase the density in the area dramatically in an already inconvenient spot where traffic flows into two small streets that are and will continue to be avenues for school traffic. Please note, the community plan also says "growth ought to be more sustainable, including natural preservation, solar farms on vacant land, and awareness of open space and environmental issues." The developer has not provided proof that construction will not destroy the natural wetland habitat and root systems of the trees on this property and neighboring properties. The plan also says "there is a significant amount of vacant land within Bentonville's established developed areas. Almost all of this land is already served by existing infrastructure and roadways." Why is it necessary to build on this sensitive terrain, construct new roadways and lay down new utilities when there are more sustainable and appropriate areas for this land use elsewhere?

Lastly, the developer shows little regard for neighborhood input in the planning process. His plans have been very difficult to obtain, and he has not reached out to affected landowners prior to the hearing. In fact, the certified letters notifying us of the upcoming public hearing were delivered two days before the Fourth of July holiday, impeding our ability to contact the city government for more information and making it more likely that residents would be out of town when delivery of the letters was attempted. This exact scenario happened the last time the same developer presented plans before a public hearing- he notified the public two days before Thanksgiving. This shows a lack of regard for the public comment process and the existing neighborhood's perspective.

We implore you the planning commission to object to this proposal and save the natural landscape. Is it worth sacrificing a natural ecosystem so a landowner and developer can profit the most?

Shannon and William Reyenga

[redacted]

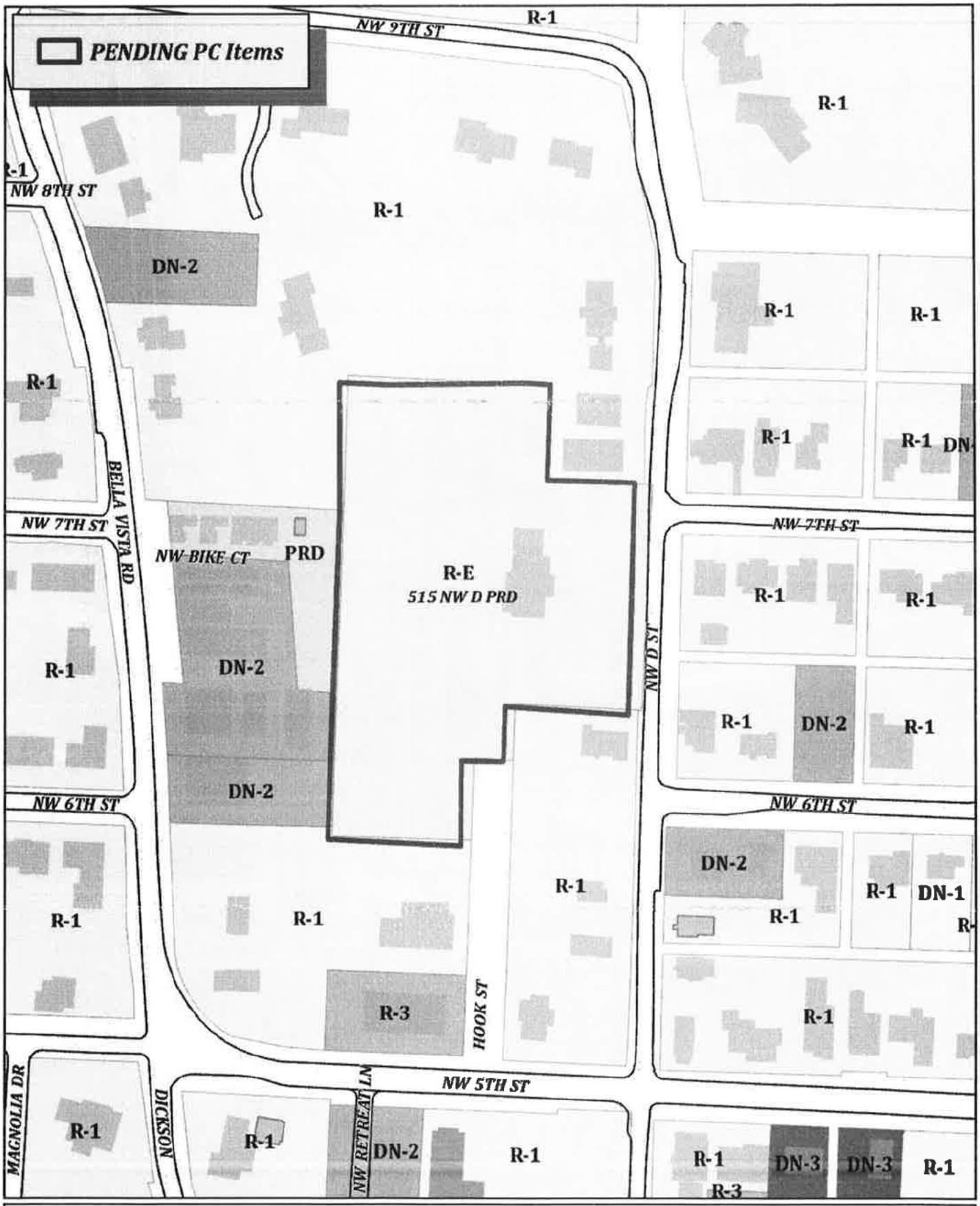

N
W E
S

PRD24-0003
515 NW D PRD
PLANNED RESIDENTIAL DEVELOPMENT

NOTICE OF INTENT TO REZONE

Mark Russell LLC has requested the Bentonville Planning Commission to set a public hearing date to consider rezoning the following property from

R-E, Residential Estate to PRD, Planned Residential Development

The legal description of the property is as follows:

Lot 2 of the Property Line Adjustment of Phillips Valley Addition, Bentonville, Benton County, Arkansas, as shown in Plat Record P3 at Page 957

The common description of the property is: 515 NW D St

The public hearing will be held July 16, 2024 at 5:00 p.m. It will be held at 305 S.W. "A" Street.

This notification is in response to the requirement that all property owners within 200 feet of said property must be notified. If you wish to express any comments about the requested rezoning, you may respond by the following methods:

1. Attend the public hearing and express your views.
2. Express your opinion in writing to the Planning Commission. You may mail this or deliver it to the City of Bentonville Planning Department, 305 SW A Street, Bentonville, AR 72712.
3. Use the bottom of this form to express your opinion by checking the appropriate box. (This may also be delivered or mailed to the above address.)

For more information, you may call the Planning Department at (479)271-3122.

- -

I/We have received notice of the public hearing for the rezoning of the above described property and:

☐ I / we have no objections to the rezoning.
☒ I / we object to the rezoning because:

Traffic backs up on D St already because of Thomas Jefferson. We need a 4-way stop on 5th & D. There aren't good sidewalks. Lots of cyclists & pedestrians on this road. Adding 60-80 more cars on this street will add to the traffic & danger. Also - this valley floods. Worried about trash/sewage w/ this many additional people.

[redacted]
Signature and Physical Address
[redacted]
Bentonville

[redacted]
Signature and Physical Address
[redacted]
Bentonville, Ar

515 N.W. 'D' ST

I/We have received notice of the public hearing for the rezoning of the above described property and:

☐ I / we have no objections to the rezoning.

☑ I / we object to the rezoning because: Photos (1) and (2)

1. SAFETY. Existing high vehicle, traffic, especially during children drop-off and pick-up school times (twice a day for approx. 180 days per year) would increase to unsafe level.
   a. N.W. 'D' not wide enough for townhome street parking.
   b. Even should townhome street parking be allowed, townhome vehicles would be blocked during drop off and pick-up times.
2. Run-off (drain) water (moderate/heavy rain) already an issue in valley to west of NW 9th, partly due to holding pond built years ago at corner of NW 'D' and NW 5th. Water volume would increase due to proposed infastructure of townhoms and parking areas. Photos (3) and (4)

Signature and Physical Address

Signature and Physical Address

Thank you,

[redacted]

[redacted]

1

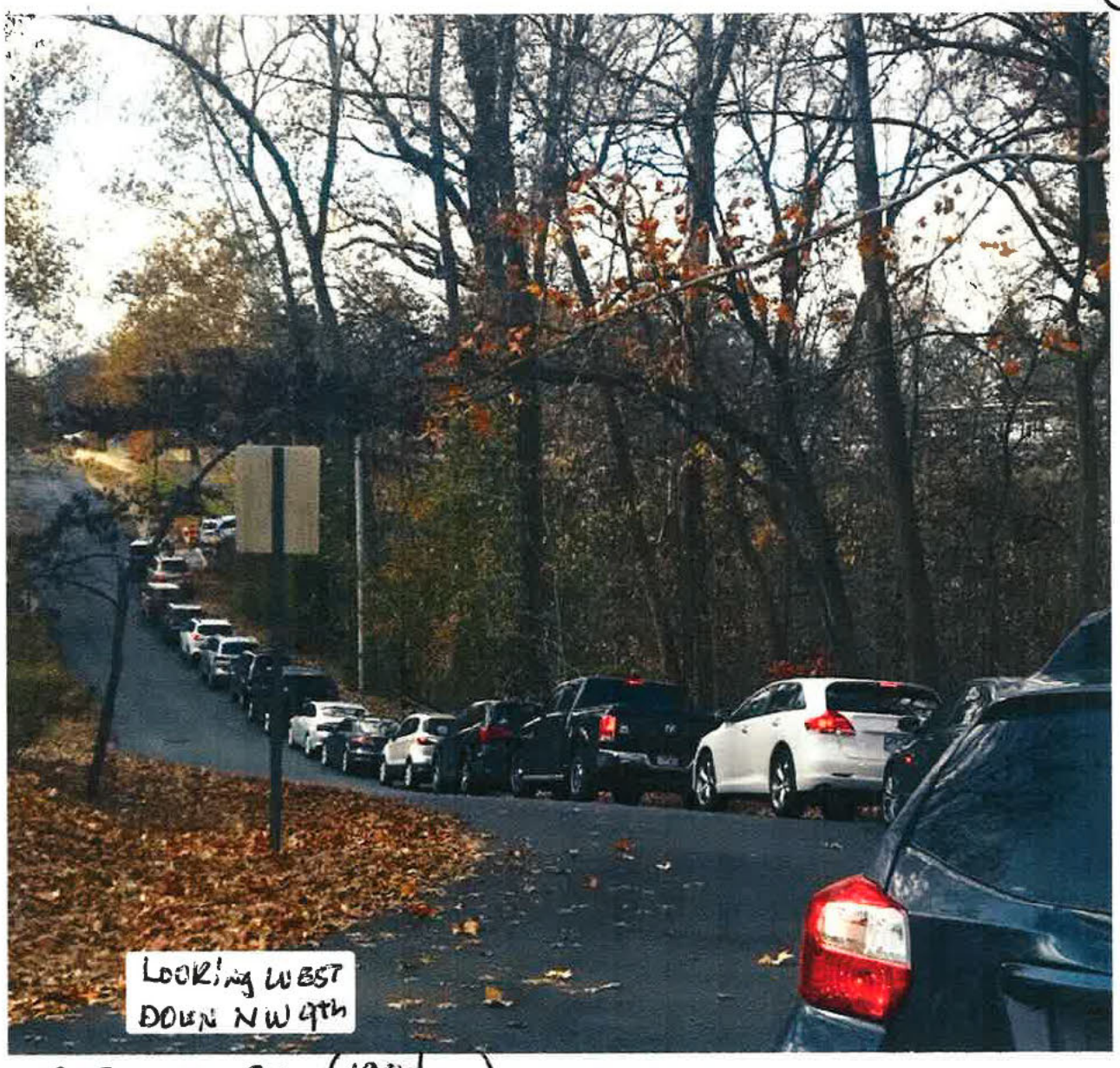

• 2 Times A DAY (180 days) PER YEAR
• Children Drop off + Pick up

Page 1 of 1

2

• 2 Times A DAY (180 days) PER YEAR
• Children Drop off + Pick up

Page 1 of 1

③

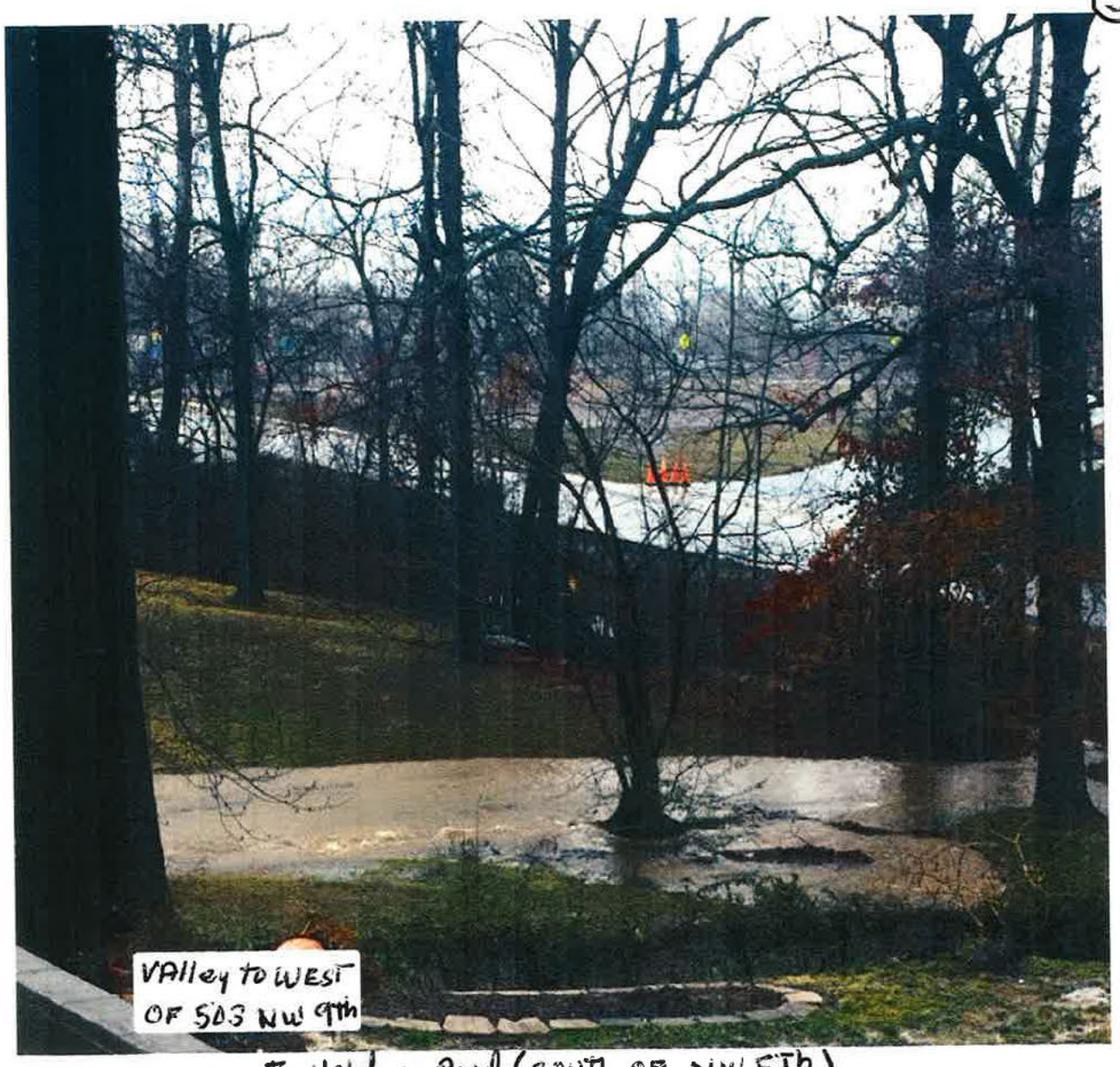

• Result of City Holding Pond (South of NW 5th)
• Average of 6-10 times a year

Page 1 of 1

④

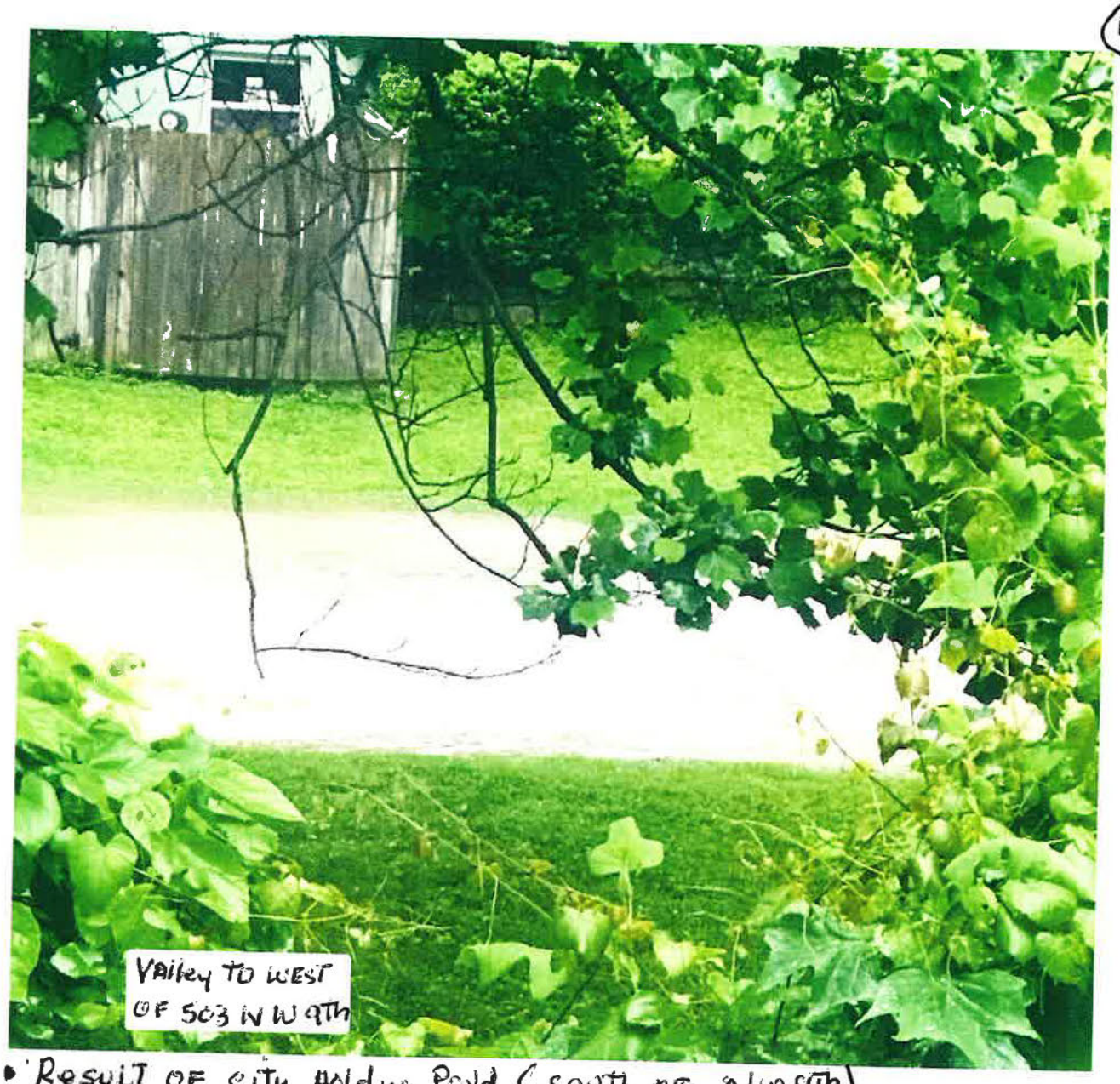

• Result of City Holding Pond (South of NW 9th)
• Average of 6-10 times a year

Page 1 of 1

NOTICE OF INTENT TO REZONE

Mark Russell LLC has requested the Bentonville Planning Commission to set a public hearing date to consider rezoning the following property from

R-E, Residential Estate to PRD, Planned Residential Development

The legal description of the property is as follows:

Lot 2 of the Property Line Adjustment of Phillips Valley Addition, Bentonville, Benton County, Arkansas, as shown in Plat Record P3 at Page 957

The common description of the property is: 515 NW D St

The public hearing will be held July 16, 2024 at 5:00 p.m. It will be held at 305 S.W. "A" Street.

This notification is in response to the requirement that all property owners within 200 feet of said property must be notified. If you wish to express any comments about the requested rezoning, you may respond by the following methods:

1. Attend the public hearing and express your views.
2. Express your opinion in writing to the Planning Commission. You may mail this or deliver it to the City of Bentonville Planning Department, 305 SW A Street, Bentonville, AR 72712.
3. Use the bottom of this form to express your opinion by checking the appropriate box. (This may also be delivered or mailed to the above address.)

For more information, you may call the Planning Department at (479)271-3122.

- -

I/We have received notice of the public hearing for the rezoning of the above described property and:

☐ I / we have no objections to the rezoning.

☒ I / we object to the rezoning because:

I object to the rezoning due to the negative impact it will have on the neighborhood and the environment. Construction traffic and parking notwithstanding, adding multi-family units without a minimum of 2 carparks per unit will NOT work in this location. There can be

[redacted] [redacted]

Signature and Physical Address Signature and Physical Address

absolutely zero parking on the road. It is already narrow and lacks shoulders, curbs, gutters, and sidewalks. That road is the only access to J.G. Elementary's drop off. It is extremely busy morning and afternoon with traffic often backed up to a stand-still to 5th St. The environmental impact will also be substantial. The valley on the west half of the property is a dry creek bed, draining into Black Apple Creek. The additional loss of trees and ground cover will increase the velocity and severity of the flash flooding that already occurs, both there and downstream.

NOTICE OF INTENT TO REZONE

Mark Russell LLC has requested the Bentonville Planning Commission to set a public hearing date to consider rezoning the following property from

R-E, Residential Estate to PRD, Planned Residential Development

The legal description of the property is as follows:

Lot 2 of the Property Line Adjustment of Phillips Valley Addition, Bentonville, Benton County, Arkansas, as shown in Plat Record P3 at Page 957

The common description of the property is: 515 NW D St

The public hearing will be held July 16, 2024 at 5:00 p.m. It will be held at 305 S.W. "A" Street.

This notification is in response to the requirement that all property owners within 200 feet of said property must be notified. If you wish to express any comments about the requested rezoning, you may respond by the following methods:

1. Attend the public hearing and express your views.
2. Express your opinion in writing to the Planning Commission. You may mail this or deliver it to the City of Bentonville Planning Department, 305 SW A Street, Bentonville, AR 72712.
3. Use the bottom of this form to express your opinion by checking the appropriate box. (This may also be delivered or mailed to the above address.)

For more information, you may call the Planning Department at (479)271-3122.

I/We have received notice of the public hearing for the rezoning of the above described property and:

☐ I / we have no objections to the rezoning.
☒ I / we object to the rezoning because:

1. Traffic is already a major problem on D Street.
2. No sidewalks, bike path for those who are currently walking children to school or riding bikes to school.

[redacted]

Signature and Physical Address

Signature and Physical Address

[redacted] (residence)

Owner of 419 NW 7th

NOTICE OF INTENT TO REZONE

Mark Russell LLC has requested the Bentonville Planning Commission to set a public hearing date to consider rezoning the following property from

R-E, Residential Estate to PRD, Planned Residential Development

The legal description of the property is as follows:

Lot 2 of the Property Line Adjustment of Phillips Valley Addition, Bentonville, Benton County, Arkansas, as shown in Plat Record P3 at Page 957

The common description of the property is: 515 NW D St

The public hearing will be held July 16, 2024 at 5:00 p.m. It will be held at 305 S.W. "A" Street.

This notification is in response to the requirement that all property owners within 200 feet of said property must be notified. If you wish to express any comments about the requested rezoning, you may respond by the following methods:

1. Attend the public hearing and express your views.
2. Express your opinion in writing to the Planning Commission. You may mail this or deliver it to the City of Bentonville Planning Department, 305 SW A Street, Bentonville, AR 72712.
3. Use the bottom of this form to express your opinion by checking the appropriate box. (This may also be delivered or mailed to the above address.)

For more information, you may call the Planning Department at (479)271-3122.

- -

I/We have received notice of the public hearing for the rezoning of the above described property and:

- [x] I / we have no objections to the rezoning.
- [ ] I / we object to the rezoning because:

[redacted]

Signature and Physical Address

[redacted]

Signature and Physical Address Bentonville

NOTICE OF INTENT TO REZONE

Mark Russell LLC has requested the Bentonville Planning Commission to set a public hearing date to consider rezoning the following property from

R-E, Residential Estate to PRD, Planned Residential Development

The legal description of the property is as follows:

Lot 2 of the Property Line Adjustment of Phillips Valley Addition, Bentonville, Benton County, Arkansas, as shown in Plat Record P3 at Page 957

The common description of the property is: 515 NW D St

The public hearing will be held July 16, 20 24 at 5:00 p.m. It will be held at 305 S.W. "A" Street.

This notification is in response to the requirement that all property owners within 200 feet of said property must be notified. If you wish to express any comments about the requested rezoning, you may respond by the following methods:

1. Attend the public hearing and express your views.
2. Express your opinion in writing to the Planning Commission. You may mail this or deliver it to the City of Bentonville Planning Department, 305 SW A Street, Bentonville, AR 72712.
3. Use the bottom of this form to express your opinion by checking the appropriate box. (This may also be delivered or mailed to the above address.)

For more information, you may call the Planning Department at (479)271-3122.

- -

I/We have received notice of the public hearing for the rezoning of the above described property and:

- [x] I / we have no objections to the rezoning.
- [ ] I / we object to the rezoning because:

[redacted]

Signature and Physical Address

[redacted]

Signature and Physical Address Bentonville AR 72712

Planning Commission
Meeting Minutes
July 16, 2024
Bentonville City Hall
Tech Review: 4:30 PM
Public Hearing: 5:00 PM

Meeting Recording:
https://us06web.zoom.us/rec/share/NnZa0mYeYbIJ4Kvwa53ceBCwFduvCDpQQnTN0oCNl0r9oqw25hmKrPuOb5HQhJwU.qcwHq1GJTTPdiwhq?startTime=1721165336000

Commissioners Present: Reginald Wright (Chair), Rod Sanders, Elaine Kerr, Danny Bennett, Dana Davis, Joe Haynie, Eric Hipp
Commissioners Absent: N/A
Staff Present: Tyler Overstreet, Tom Adler, Bradley Gavrielides, Brittany Chue, Dan Weese, Bonnie Bridges via Zoom, Jon Stanley via Zoom, Keegan Stanton via Zoom

I. Call to Order

- Commissioner Wright calls the meeting to order at 5:00 pm.

II. Approval of Minutes

1. **July 2nd, 2024, Meeting Minutes** **Approval of Meeting Minutes**
   - Motion to approve by Haynie, second by Kerr.
   - Minutes are approved 7-0.

III. Consent Agenda

IV. New Business

Advertised Public Hearings

1. **Benton County Temporary Parking Lot** **Conditional Use Permit***
   207, 209, and 215 Northeast 2nd Street (CU22-0027)
   Extension from 2022 approved CUP for long-term temporary use (24 months).
   - Mr. Adler provides an overview of the staff report.
   - Commissioner Wright opens the public hearing.
   - Commissioner Wright closes the public hearing.
   - Discussion among commissioners on temporary parking lots and how the hotel cannot open until the parking garage opens.
   - The Commissioners add the following condition: "The CUP will expire 90 days after the parking garage to the south obtains a Certificate of Occupancy."
   - Conditional Use Permit with the amended condition is approved 7-0.

2. **Lopez** **Rezoning***

501 Northwest C Street (RZ24-0024)

Rezoning: R-1, Low-Density Single-Family Residential to DN-2, Downtown Medium Density Residential

- Mr. Adler provides an overview of the staff report.
- Commissioner Wright opens the public hearing.
- Grant Nevill, representing the applicant, is here for any questions.
- Charlotte Stacey of 402 NW 6th Street asks about future development plans outside of a single-story lot, as well as water and sewer availability.
- Commissioner Wright closes the public hearing.
- Discussion on narrative, allowed uses by right for DN-2 zoning, and Municipal Code requirements on water and sewer access for subdivisions.
- Rezone is approved 7-0.

3. **Kirchhofer** **Rezoning***

515 Jefferson Street (RZ24-0026)

Rezoning: R-1, Low-Density Single-Family Residential to DN-1, Downtown Low Density Residential

- Mr. Adler provides an overview of the staff report.
- Commissioner Wright opens the public hearing.
- Marcella Williams, representing the applicant, is here for any questions.
- Commissioner Wright closes the public hearing.
- Rezone is approved 7-0.

4. **Walmart Campus PUD Revision 10** **Planned Unit Development Amendment***

Southeast 8th Street (PUD20-0002)

- Mr. Adler provides an overview of the staff report.
- Commissioner Wright opens the public hearing.
- Bill Watkins, representing the applicant, is here for any questions.
- Commissioner Wright closes the public hearing.
- Discussion on previous revisions and initiating parking deck construction.
- Planned Unit Development Amendment is approved 7-0.

5. **Catalpa Cottages** **Planned Residential Development***

515 Northwest D Street (PRD24-0003)

Rezoning: R-E, Residential Estate to Planned Residential Development (PRD).

- Mr. Adler provides an overview of the staff report.
- Chairman Wright opens the public hearing.
- Mark Haney, the applicant, discusses project revisions based on neighbor's concerns: removing commercial uses, decreasing density, and matching elevations to D Street.
- Melanie Kerr of 509 NW 9th Street, abutting the subject property, is concerned about traffic during school hours, the safety of children, and the long construction process.
- Kevin Green of 419 NW 7th Street wants to see a traffic study done while school is in session and does not want D Street to be widened from his property.
- Jonathan McArthur of 505 NW D Street is concerned about backing out onto D Street traffic and drainage issues causing the elevations on his lot to shift by two feet.
- Shannon Bedore of 502 Bella Vista Road opposes the project because of traffic from multi-unit housing, the potential for imminent domain, and lack of sidewalks.
- Grant Nevill of 705 NW D Street is concerned about PRD parking spot requirements.

- Deborah Elsenhout of 201 NW 7th Street would like to see a 3rd project revision preserving the history and traditions of the neighborhood that create community.
- Sue Ann Overstreet of 707 NW C Street is concerned over land sloping towards the creek and does not think parallel parking spaces are reasonable with the traffic.
- Shannon Reyenga of 612 Bella Vista Road is concerned about tree preservation and fast driving cars on Walton not watching out for pedestrians.
- Janis Sommer of 338 NW 5th Street is worried about rapid development in R-1 neighborhoods at the expense of the charm that brings people to Bentonville.
- Chairman Wright closes the public hearing.
- Discussion between Commissioners and Staff on the ability for Planning Commission to require a traffic study for large scale development stating how many extra cars will be on the road and analyzing car, bike, and pedestrian routes. Commissioners and Staff discuss PRD parking spaces requirements, water and sewer availability and underground detention covered during large scale, issues with the safety of on-street parking, imminent domain only being available for city projects, and appreciating the revisions Mr. Haney made from the first project but wanting to see a plan to address traffic.
- Planned Residential Development is denied 4-3, with Hipp, Bennett, Kerr, and Davis voting against.

V. Other New Business

1. NWA Townhomes — Large Scale Development

Been Road (LSD24-0018)

Waiver 1: *A waiver from Sec. 1400.06 Street Frontage Buffer Landscaping Required to allow for alternative tree planting locations.*
Waiver 2: *A waiver from Sec. 3.4.1 Item 3 of the Stormwater Management and Drainage Manual to match the crown rather than flow line of pipes.*

- Mr. Adler provides an overview of the staff report.
- Discussion during Tech Review of the front elevation on the front door not being proportional to the upper window and variation in color to reflect a residential property.
- Motion to approve Waiver 1 by Sanders, second by Hipp.
- Waiver #1 is approved 7-0.
- Motion to approve Waiver 2 by Sanders, second by Davis.
- Waiver #2 is approved 7-0.
- Commissioner Davis requests to add a condition as follows: "Amend the Been Road facing units to add front of house character elements that address Been Road as approved by the Planning Director."
- Large Scale Development with waivers and the modified condition are approved 7-0.

VI. Old Business

VII. Other Business

1. Plan Bentonville Update — Informational*

Plan Bentonville's feedback portal will launch this week on July 18th, offering a variety of engagement opportunities through office hours, pop-ups, open houses, and an online dashboard that is mobile and desktop friendly. Residents will be able to explore various place types on the story map, see how place types are arranged, and select any parcel on the map to fill out a public survey, which can be accessed on Thursday at PlanBentonville.com.

VIII. Adjournment

- Motion to adjourn by Haynie, second by Hipp.
- Meeting is adjourned.

City of Bentonville, Arkansas Agenda Item Form

Item Details

Council Meeting Date:	8/27/2024	**Submitted By:**	Tyler Overstreet
Phone:	4792713144	**For Department(s):**	Planning
Email:	toverstreet@bentonvillear.com		

Item Type (Check all that apply)

- [✓] Informational
- [ ] Bid Award
- [ ] Enter into an Agreement
- [ ] Change Order
- [ ] Recognizing Funds
- [ ] Budget Adjustment
- [ ] Waiver of Bid
- [ ] Emergency Clause
- [✓] Ordinance
- [ ] Resolution
- [ ] Informational

Title, Recommendation & Justification

Title:	An Appeal of a Planning Commission Denial of a Rezoning at 103 SE 13th Street
Action Recommendation & Justification:	An ordinance changing real estate in the City of Bentonville, Arkansas, from its present zoning classification of R-1, Low-Density Single-Family Residential to DN-2, Downtown Medium-Density Residential; and for other purposes. No budget adjustment is needed.
Additional Comments for Consideration (Optional):	Planning Commission denied this item by a vote of 5-2. The appeal letter and original Planning Commission packet are included as attachments.
Amount for Approval:	$

Budget Impact

Is this Item Budgeted? [ ] YES [ ] NO [✓] ITEM HAS NO COST [ ] OTHER:_____

Budget Adjustment *(to be completed by Finance when applicable)*

Account Number (ORG-OBJECT)	Account Description	Expense	Revenue
		$	$
		$	$
		$	$
		$	$

Fund(s) Impacted (check all that apply) [ ] General Fund [ ] Utility Fund [ ] Street Fund [ ] Other(s):_____

Budget Impact Notes for Consideration (Optional):

ORDINANCE NO. _____

AN ORDINANCE CHANGING REAL ESTATE IN THE CITY OF BENTONVILLE, ARKANSAS, FROM ITS PRESENT ZONING CLASSIFICATION OF R-1, LOW DENSITY SINGLE FAMILY RESIDENTIAL TO DN-2, DOWNTOWN MEDIUM-DENSITY RESIDENTIAL; AND FOR OTHER PURPOSES.
(PROJECT NUMBER: RZ24-0029)

WHEREAS, Lela A. Ruiz duly filed a petition with the Planning Commission requesting that the hereinafter described property situated in Benton County, Arkansas, be changed from its present zoning classification of R-1, LOW DENSITY SINGLE FAMILY RESIDENTIAL to DN-2, DOWNTOWN MEDIUM-DENSITY RESIDENTIAL to be used in accordance with city zoning laws and state laws, which property is described as follows:

LOT 7, BLOCK 4, BANKS ADDITION AS SHOWN ON PLAT RECORD 'F' PAGE 85, AND FILED FOR RECORD AT THE BENTON COUNTY CLERK'S OFFICE, BENTON COUNTY, ARKANSAS;

WHEREAS, the Planning Commission duly met and considered the application and duly set the petition for public hearing to be held August 6, 2024 in the Council Chambers of the City of Bentonville;

WHEREAS, public notice of said hearing having been published in the Northwest Arkansas Democrat-Gazette for the time and in the manner required by law; and

WHEREAS, the Planning Commission voted to recommend to the City Council that the petition not be approved and that said property not be rezoned from its present classification of R-1, LOW DENSITY SINGLE FAMILY RESIDENTIAL to DN-2, DOWNTOWN MEDIUM-DENSITY RESIDENTIAL.

NOW, THEREFORE, BE IT ORDAINED BY THE CITY COUNCIL FOR THE CITY OF BENTONVILLE, ARKANSAS:

Section 1: That the above described real property is hereby changed from its present zoning classification of R-1, LOW DENSITY SINGLE FAMILY RESIDENTIAL to DN-2, DOWNTOWN MEDIUM-DENSITY RESIDENTIAL to be used in accordance with the city zoning laws and state laws;

Section 2 - Severability Provision: If any part of this Ordinance is held invalid, the remainder of this Ordinance shall continue in effect as if such invalid portion never existed; and

Section 3 - Repeal of Conflicting Provisions: All Ordinances, Resolutions, or Orders of the City Council, or parts of the same, in conflict with this Ordinance are repealed to the extent of such conflict.

PASSED AND APPROVED this_____ day of _____, 2024.

APPROVED:

_____
Stephanie Orman, Mayor

ATTEST:

_____
Malorie Marrs, City Clerk

August 15, 2024

Bentonville City Council
RE: Notice of Appeal RZ24-0029
103 SE 13th Street

Dear City Council Members,

We formally request an appeal of the planning commission's recent decision for the rezoning of the lot at 103 SE 13th Street based on the following information:

1. **Summary of reasons provided by the planning commission concerning the decision made in the case:**

- At the time of the vote, the only reason given was "it just doesn't fit".
- During a conversation after the meeting, several planning commission members expressed concerns that the suggested development type would not fit on the lot.

2. **Reasons why the applicant of the appeal contends that the planning commission erred in its decision:**

- The issue presented to the commission was whether the requested DN2 zone was appropriate for the lot and its surrounding neighborhood, not the feasibility of a specific project.
- The vote seemed to address opposition to the development type rather than the appropriateness of the rezoning itself.
- No site design, building size, or configuration was presented or proposed by the applicant. Since this information was not included, the commission could not determine feasibility.
- During the closed discussion, commissioners and a staff member engaged in hypothetical conceptualizing about the potential development. Some commissioners speculated on possible building sizes, configurations, and feasibility. These topics were not relevant to the rezone vote.

3. **Reasons the public health, safety, welfare, and morals would be better served if the planning commission's action were reversed:**

- The lot is located just one block north of 14th Street at Main Street and is an ideal spot for a transition neighborhood.
- The neighboring lot directly to the south is currently commercial. A new mixed-use development is planned one lot west on Main Street.
- The new future land use plan for Bentonville designates this lot as part of a Walkable Neighborhood, which includes a high degree of housing diversity, such as single-family homes, townhomes, and apartments.
- To align with the vision of the new land use plan, the equivalent zoning under our current code is medium density DN2. This medium-density zoning supports the construction of housing for multiple families, addressing the urgent need for more housing.

Our goal is to create responsible and appropriate residential development in Bentonville. We request an appeal to ensure a fair review of this rezoning request, aligning the lot with the updated future land use map and accurately reflecting the ongoing changes in the neighborhood.

Sincerely,
Wendy Staten
Monarq Design, LLC
Representing: Bryce Masterson, developer and Lela Ruiz, owner

	Ruiz
	103 Southeast 13th Street
	PC Date: 8/6/2024

Staff Report Details

Project Number	[RZ24-0029]
Applicant / Current Owner	Lela A. Ruiz
Site Area	+/- **[0.26]** Acres
Current Zoning	R-1, Low Density Residential
Requested Zoning	DN-2, Downtown Medium Density Residential
Current Future Land Use Map Designation	Low Density Residential
Requested Future Land Use Map Designation	Medium Density Residential
Development Type / Use	Cottage Court
Related projects	

Property Description

The subject property is located at 103 Southeast 13th Street. The property is presently zoned R-1, Low Density Single-Family Residential, with a land use designation of Low Density Residential. The property is situated on a mid-block lot and has direct access to Southeast 13th Street. Surrounding zoning districts include R-1, Low-Density Single-Family Residential to the east, west, and north, and DE, Downtown Edge, to the south.

Project Details

The applicant has requested a rezoning of the property from R-1, Low Density Residential, to DN-2, Downtown Medium Density Residential. The applicant states in their narrative that the rezoning will assist with developing a small cottage court community with a maximum of seven units on the site. While cottage courts are allowed as a conditional use in R-1, the lot has only 80' of frontage and, to meet the cottage court minimum frontage requirement, a DN-2 zone is a necessary.

Relationship to the General Plan / Projected Traffic Impact

Relationship to the General Plan / Projected Traffic Impact

The property is presently designated in the Land Use Plan as Low Density Residential (LDR). The blocks on the north are designated as Low Density Residential, with the blocks to the south designated as a mix of Mixed-Use Commercial and Low Density Residential. The blocks to the west are designated as Mixed-Use Commercial, and the blocks to the east are designated as Low-density Residential.

Medium Density Residential areas include townhouse or duplex residential properties with a typical density of 8-12 units per acre. These areas are found both near Downtown and in some recent growth areas. These areas may also include local amenities for residents, including neighborhood parks, places of worship, etc.

The zoning request requires amendment of the Future Land Use Plan from Low-Density Residential to Medium Density Residential. This location is within Priority Area 1 of the Community Plan which calls for Downtown Intensification, which highlights reinvestment in urban neighborhoods in and around Downtown Bentonville.

The current city infrastructure is adequate to accommodate the use. No significant impact is expected to traffic.

Public Comment

Has Staff received Public Comment at the time of this report? : **No**

Analysis / Waivers

The current surrounding properties are zoned R-1, Low Density Single Family Residential, DE, Downtown Edge, and DC, Downtown Core.

From a built environment lens, this street consists of single-family homes, commercial, and mixed-use development. All public utilities exist and currently service this site.

The request for a future land use change is not consistent with the Future Land Use Map. If there were more frontage on the site and an alley available for parking, a cottage court could be a nice fit for the community. As it stands, it is difficult to see how 7 cottages (assuming 500 sf footprint per cottage, 500 sf open space and 200sf parking per DU) could be arranged around a common courtyard facing the street (*Muni Code Sec. 601.35(i)(2)) Unit Orientation,* with so little frontage.

Conclusion

Given that this proposal is not consistent with the future land use map, staff does not recommend approval.

Additional Details

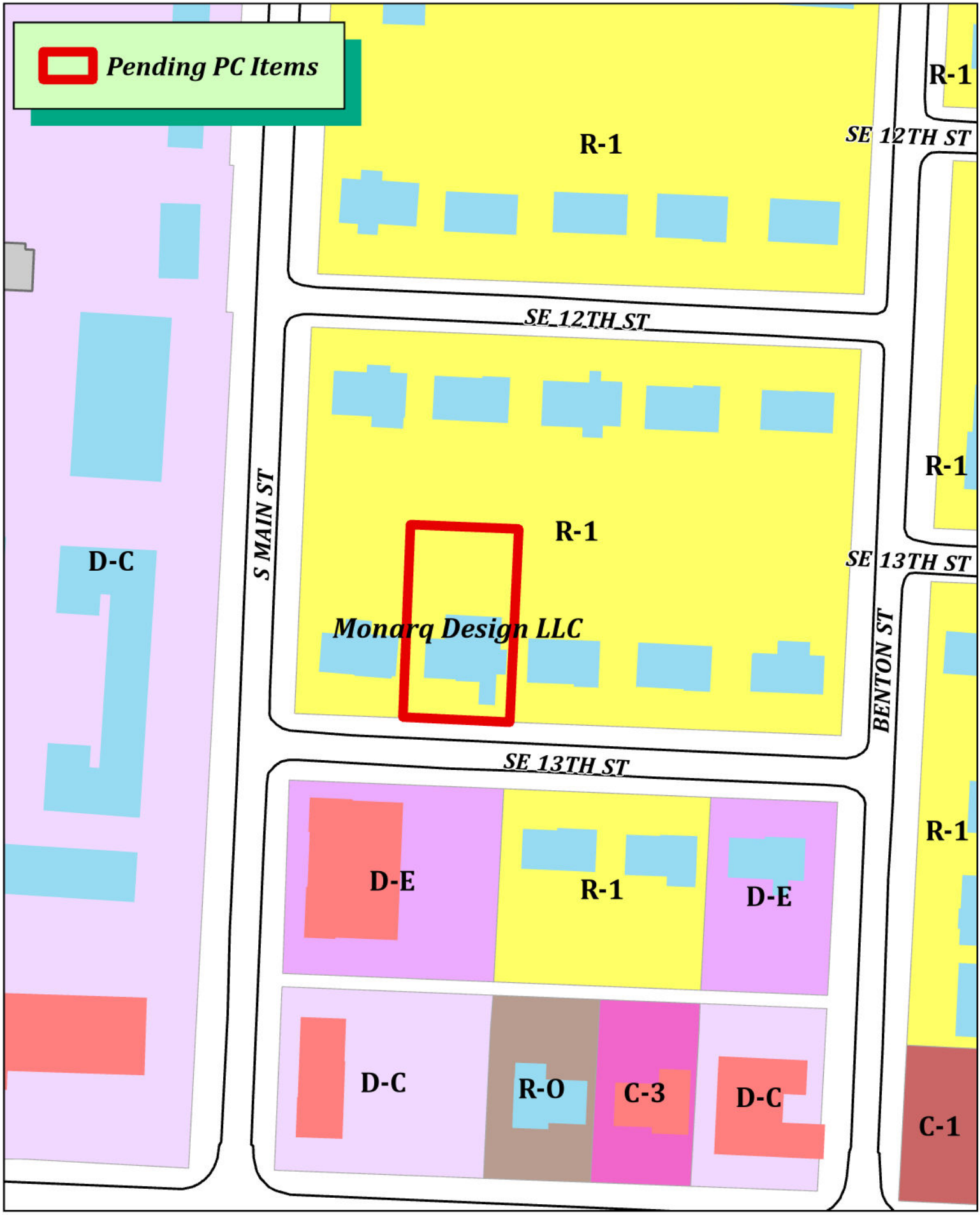

RZ24-0029
Monarq Design LLC
R-1 to DN-2

Narrative

The lot at 103 SE 13th Street in Bentonville, Arkansas, is currently zoned R1. We respectfully propose a change to DN2. The property is currently under contract to be sold, followed by plans to create a small cottage court on the site. Due to the width of the lot being 80', a DN2 zone designation is required to allow a cottage court development.

Located just one block north of 14th Street and one lot east of South Main Street, this lot is a logical fit for a DN2 zone. The site is across the street from C1 zoning, and in the near future will see a new mixed-use development built across the street to the west. This neighborhood needs to make the natural move to higher density residential zoning to provide more housing opportunities in Bentonville.

The intended use for the lot will be cottage court residential units. The maximum number of units the size of the lot will allow is seven, so traffic will increase slightly but not measurably. No signage is planned at this time. The aesthetic style and quality of the cottages will match or exceed the surrounding residences.

An 8" sewer line runs east/west along the north (rear) property line of the lot and a 6" water main runs east/west on 13th Street. These lines supply the existing structure.

In addition to a request to rezone, we also request an amendment to the Future Land Use Map which currently shows this lot in a low-density residential area. The Map would be amended to reflect medium density residential. This density provides a good transition zone between the low-density lots to the north and east and the mixed-use/commercial zoning to the immediate west and south.

City of Bentonville, Arkansas Agenda Item Form

Item Details

Council Meeting Date:	8/27/2024	**Submitted By:**	Tyler Overstreet
Phone:	(479) 271-3144	**For Department(s):**	Planning
Email:	toverstreet@bentonvillear.com		

Item Type (Check all that apply)

☑ **Informational** ☐ **Bid Award** ☐ **Enter into an Agreement** ☐ **Change Order**
☐ **Recognizing Funds** ☐ **Budget Adjustment** ☐ **Waiver of Bid** ☐ **Emergency Clause**

☐ **Ordinance** ☐ **Resolution** ☑ **Informational**

Title, Recommendation & Justification

Title:	Appointment of Danny Bennett to the Board of Adjustment
Action Recommendation & Justification:	Appointment of Danny Bennett to the Board of Adjustment to serve as the Planning Commission member on the Board. The term is effective August 27, 2024 and expires December 31, 2029. Commissioner Bennett was recommended by the Planning Commission at their August 6 meeting. This will be Commissioner Bennett's first term on the Board of Adjustment.
Additional Comments for Consideration (Optional):	
Amount for Approval:	$

Budget Impact

Is this Item Budgeted? ☐ **YES** ☐ **NO** ☑ **ITEM HAS NO COST** ☐ **OTHER:**_____

Budget Adjustment *(to be completed by Finance when applicable)*

Account Number (ORG-OBJECT)	Account Description	Expense	Revenue
		$	$
		$	$
		$	$
		$	$

Fund(s) Impacted (check all that apply) ☐ **General Fund** ☐ **Utility Fund** ☐ **Street Fund** ☐ **Other(s):**_____

Budget Impact Notes for Consideration (Optional):

MEMO

To: City Council Members and City Clerk
From: Stephanie Orman, Mayor
CC date: August 27, 2024
RE: Appointment of Danny Bennett to the Board of Adjustment

SO

I recommend the appointment of Danny Bennett to the Board of Adjustment.

Mr. Bennett will be the Planning Commission representative for the Board of Adjustment. His term begins August 27, 2024, and will expire on December 31, 2029.

Stephanie Orman

City of Bentonville, Arkansas Agenda Item Form

Item Details

Council Meeting Date:	8/13/2024	**Submitted By:**	Shelli Kerr
Phone:	479-271-6822	**For Department(s):**	Planning
Email:	skerr@bentonvillear.com		

Item Type (Check all that apply)

☐ Informational ☐ Bid Award ☐ Enter into an Agreement ☐ Change Order
☐ Recognizing Funds ☐ Budget Adjustment ☐ Waiver of Bid ☐ Emergency Clause
☐ Ordinance ☑ Resolution ☐ Informational

Title, Recommendation & Justification

Title:	Resolution Adopting a Wayfinding Signage Policy
Action Recommendation & Justification:	A resolution adopting a Wayfinding Signage Policy that sets forth criteria for destinations to be featured on wayfinding signs, outlines the process for evaluating requests for inclusion, and specifies design standards for the fabrication and installation of these signs. No budget adjustment is needed.
Additional Comments for Consideration (Optional):	This item does not impact the city budget.
Amount for Approval:	$ 0

Budget Impact

Is this Item Budgeted? ☐ YES ☐ NO ☑ ITEM HAS NO COST ☐ OTHER:_____

Budget Adjustment *(to be completed by Finance when applicable)*

Account Number (ORG-OBJECT)	Account Description	Expense	Revenue
		$	$
		$	$
		$	$
		$	$

Fund(s) Impacted (check all that apply) ☐ General Fund ☐ Utility Fund ☐ Street Fund ☐ Other(s):_____

Budget Impact Notes for Consideration (Optional):

RESOLUTION NO. _____

A RESOLUTION ESTABLISHING WAYFINDING SIGNAGE ELIGIBILITY CRITERIA AND A REVIEW PROCESS; ADOPTING WAYFINDING SIGNAGE DESIGN SPECIFICATIONS; AND FOR OTHER PURPOSES.

WHEREAS, wayfinding signs are intended to provide directional information to help lead the general public to unique, local tourist destinations;

WHEREAS, the Bentonville Advertising and Promotion Commission hired a consultant in 2008 to design and define wayfinding signage within Bentonville;

WHEREAS, the Bentonville Advertising and Promotion Commission partnered with the City of Bentonville to install wayfinding signage around the city based on specific criteria; and

WHEREAS, that same criteria should be used to determine if a destination should be included on future wayfinding signs.

NOW, THEREFORE, BE IT RESOLVED BY THE CITY COUNCIL OF THE CITY OF BENTONVILLE, ARKANSAS:

Section 1: That the City of Bentonville in partnership with the Bentonville Advertising and Promotion Commission shall make determinations regarding an establishment's placement on city wayfinding signage in accordance with *Attachment A: Wayfinding Signage Criteria and Review Process,* an electronic copy and hard copy of which is on file with the City Clerk and is hereby adopted by references as though it were copied herein fully;

Section 2: That the City of Bentonville adopts the wayfinding signage design specifications set forth with *Attachment B: Wayfinding Signage Specifications,* an electronic copy and hard copy of which is on file with the City Clerk and is hereby adopted by references as though it were copied herein fully;

Section 3: That the City of Bentonville and the Bentonville Advertising and Promotion Commission retains proprietary ownership of the design of the wayfinding signs currently in place which shall not be recreated, imitated, or used without the specific written authorization of the City of Bentonville and the Bentonville Advertising and Promotion Commission;

Section 4 - Severability Provision: If any part of this Resolution is held invalid, the remainder of this Resolution shall continue in effect as if such invalid portion never existed; and

Section 5 - Repeal of Conflicting Provisions: All Ordinances, Resolutions, or Orders of the City Council, or parts of the same, in conflict with this Resolution are repealed to the extent of such conflict.

PASSED and APPROVED this _____ day of _____, 2024.

APPROVED:

ATTEST:

_____
Stephanie Orman, Mayor

_____
Malorie Marrs, City Clerk

City of Bentonville
Wayfinding Signage Criteria and Review Process

A. Eligibility Criteria

For an individual destination to be included on the wayfinding signs of the City of Bentonville, there are three steps to determining eligibility.

1. **Location.** The destination must be located in Bentonville city limits. The address must be in the City's GIS system and located inside Bentonville city limits to be eligible.
2. **Destination Type.** The City and Bentonville Advertising and Promotion Commission must determine that the destination meets at least one of the destination types described in *Table 1: Destination Types Suitable for Wayfinding Signage* and is not listed on *Table 2 Establishments Not Suitable for Wayfinding Signage.*
3. **Criteria Score.** The destination must have a minimum score of 55 using *Table 3: Criteria Score Form* completed by Planning and Bentonville Advertising and Promotion Commission.

B. Review and Approval Process

1. **Request.** Request can be made via email to the Planning department at planning@bentonvillear.com.
2. **City limits verification.** Planning will confirm if the destination location is in the Bentonville city limits via the city's GIS.
3. **Destination type determination.** Planning will coordinate with Bentonville Advertising and Promotion Commission to determine which destination type best fits the location requested.
4. **Criteria scoring.** Planning will coordinate with Bentonville Advertising and Promotion Commission to complete the criteria score sheet and make a final decision.
5. **Decision and notification.** Planning will notify the applicant of the decision.
6. **Installation.** If the decision is approved, Planning will coordinate the sign installation with the Street Department.
7. **Appeal.** If the decision is denied, the applicant may appeal to City Council within 60 days of the notice of denial.

C. Destination Types Suitable for Wayfinding Signage

Table 1: Destination Types Suitable for Wayfinding Signage describes the individual destinations that are suitable for inclusion in the wayfinding signage program.

TABLE 1: DESTINATION TYPES SUITABLE FOR WAYFINDING SIGNAGE	
COMMERCIAL	
Amusement Parks	A permanent facility that may include structures and building, where there are multiple devices for entertainment, including rides, booths for the conduct of games, or sale of items, buildings for shows and entertainment, and restaurants and souvenir sales. The facility must be open a minimum of 5 months out of the year.
Brewery	A licensed site which shall be open to the general public for guided tours, tasting and sales, a minimum of 1,500 hours per year, and provide an educational format for informing visitors about beer and beer processing.
Commerce Park	A group of commercial manufacturing facilities, at least 25 acres in size, recognized and signed as a commerce park by the local authorities.
Racetracks and Speedways	A permanent facility used for the primary purpose of presenting organized horse or automobile racing events.
Specialty Shopping Center	A group of 15 or more specialty shops (antique, craft, outlet, farmers' market, etc.) or retail stores with ample parking facilities. Specialty shops must offer goods or services of unique interest to tourists, and which derives the major portion of its income during the normal business season from motorists that do not reside in the immediate area. Goods and services are readily available to tourists, without the need for scheduling appointments or return trips.
Winery	A licensed site open to the general public for tours tasting and sales a minimum of 1,500 hours per year and provides an educational format for informing visitors about wine and wine processing.
Zoos, Zoological Gardens, Animal Parks and Aquariums	A facility open to the public where animals, reptiles or fish are kept, often-in combination of indoors and outdoors spaces.
CULTURAL/INSTITUTIONAL	
Arenas	Includes stadiums, auditoriums and civic or convention centers.
Business District	An area within the city that is officially designated as a business district by the city council.
College or University	An educational institution that is nationally accredited and grants degrees.
Courthouses/	A public building, structure, or complex used by a Federal, County, State or

TABLE 1: DESTINATION TYPES SUITABLE FOR WAYFINDING SIGNAGE	
Government Buildings	municipal government for the purpose of convening official governmental and activities open to the public.
Fairgrounds	Includes county and state fairgrounds.
Hospitals	An institution providing primary health services and medical or surgical care to persons, primary inpatients, suffering from illness, disease, injury, deformity and other abnormal physical or mental conditions with 24-hour emergency care with a doctor on duty at all times.
Institution	A health care center operated by a County, State, or Federal government.
Library	A repository for literary and artistic materials, such as books, periodicals, newspapers, recordings, films, and electronic media, kept and systemically arranged for use and reference and open to the public.
Military Base	A facility operated by the State or Federal government for training or support of military troops.
Museums	A facility open to the public in which works of artistic, historical, scientific or educational value are cared for and exhibited.
Observatory	A facility designed and equipped to observe astronomical, meteorological or other natural phenomena.
HISTORICAL/ARCHITECTURAL	
Historic Site	A structure or place of historical, archaeological or architectural significance listed on or eligible for listing on the National Register of Historic Places maintained by the U.S. Department of Interior or otherwise designated by the State Historical and Museum Commission (HMC), or a County Historical Commission or Agency. The site must be accessible to the general public and provide a place where visitors can obtain information about the historic site.
RECREATIONAL	
Boat Launch	A public facility for the docking or launching of boats.
Campground	An overnight camping facility with continuous operation for at least 6 months per year, a minimum of 20 overnight camping sites, an attendant available during the hours of operations, and rest rooms with showers, running water and flush toilets. Accommodations sold on annual or time-sharing basis or otherwise not available for general public use will not be counted toward the minimum requirements.
Canoeing and Rafting	Public areas with established canoeing and rafting facilities. Individual private facilities are not eligible.
Golf Courses	A facility open to the public and offering at least eighteen (18) holes of golf. This does not include miniature golf courses, driving ranges, putt-putt courses or indoor

TABLE 1: DESTINATION TYPES SUITABLE FOR WAYFINDING SIGNAGE	
	golf.
Hiking and Biking Trails/Routes	Publicly accessible areas designated for recreational hiking, biking, walking owned and maintained by a governmental entity or a non-profit organization. Signs will only direct the motorist to an established trailhead with parking facilities.
Horseback Riding Areas	Areas designated for horseback/pony back riding for the general public.
Hunting and Fishing Areas	Areas so designated and under the jurisdiction of the State Game Commission or the State Fish and Boat Commission.
Parks	Outdoor areas open to the public for recreation and leisure.
Sports Facilities	Regional (multi-jurisdictional) facilities such as minor league and little league baseball fields, and school recreational fields.
NATURAL ASSETS	
Caverns and Other Unique Natural Areas	A naturally occurring area or site of interest to the general public. May include caverns, waterfalls, caves, or special rock formations.
National, State and Regional Parks and Forests	An area so designated and under the jurisdiction of a State agency, National Park Service, and U.S. Department of the Interior, County Government, or non-profit organization with facilities open to the public.
Scenic Overlook	An area, usually at the side of the road, for observation of a scenic area such as significant geology, unique botanical resources, or across expanses of land such as farmlands, woodlands, or across mountaintops or ridges.
TOURIST SERVICES	
Visitor Information Centers	A facility where the primary purpose of its operation is to provide, information and tourist supportive services. Must be approved by the State Department of Community and Economic Development.
TRANSPORTATION	
Airports	A public use facility licensed by the State Department of Transportation for landing and takeoff of aircraft, and for receiving and discharging passengers and cargo.
Heritage Roads, Historic Routes and Trails	A road, trail, or route designated by the State Department of Conservation and National Resources (DCNR), United States Department of the Interior, or other Federal agency as being part of a national or state recognized historic or heritage park/trail system.
Railroad/Bus/Ferry Stations	A passenger terminal utilized for discharging and picking up passengers and ticketing.

D. Establishments Not Suitable for Wayfinding Signage

Table 2: Establishments Not Suitable for Wayfinding Signage describes the establishments that are not suitable for inclusion in the wayfinding signage program.

TABLE 2: ESTABLISHMENTS NOT SUITABLE FOR WAYFINDING SIGNAGE	
COMMERCIAL	
Agricultural Farms / Berry Patches / You-Pick Farms / Tree Nurseries / Greenhouses / Produce Stands Animal Clinics / Animal Shelters Industrial Parks and Plants	Motels / Hotels / Inns Private Businesses Theaters Trailer Parks TV/Radio Stations
CULTURAL/INSTITUTIONAL	
Civil Defense Facilities Country Clubs Coroner's Office Driver's License Centers Grade and High School Highway Buildings Infirmaries or Treatment Centers Jails / Prisons	Maintenance Facilities Power Plants Private Institutions Research Facilities Sanitariums Seminaries Vocational Trade School
HISTORICAL/ARCHITECTURAL	
Privately owned home or facilities	
RECREATIONAL	
Camps: Scout / Church / Youth	
OTHER	
Apartment complexes Churches Halfway house	Private residence Retirement Facilities / Nursing Homes Subdivisions

E. Criteria Score

Table 3: Criteria Score Form below is used to determine if the destination meets the minimum score for inclusion in the Wayfinding Signage Program. To qualify, an establishment must have a minimum score of 55.

TABLE 3: CRITERIA SCORE FORM
The minimum score to qualify is 55

CRITERIA			SCORE
1. Employment Size [1]	101+:	25 points	
	51-100:	20 points	
	11-50:	15 points	
	<10:	10 points	
2. Road System			
	Paved access road and entrance with clearly visible entrance signing:	10 points	
	Unpaved road access or entrance with clearly visible entrance signing:	5 points	
	Unclear entrance with sign not clearly visible with 200 feet of entrance:	0 points	
3. Parking Facilities			
	Parking provided is paved and complies with the number of parking spaces required by the Bentonville Off-Street Parking Requirements:	15 points	
	Parking provided is un-paved and complies with the number of parking spaces required by the Bentonville Off-street Parking Requirements:	10 points	
	Legal on-street parking or parking in public lots or garages are located within ¼ mile of destination:	10 points	
	Parking provided does not meet the number of parking spaces required by the Bentonville Off-street Parking Requirements:	5 points	
	No parking	0 points	
4. Seasonal Operations	Open 12 months per year:	20 points	
	Open at least 6 months per year:	15 points	
	Open less than 6 months per year:	5 points	
5. Hours of Operation	Open 56 or more hours per week:	20 points	
	Open between 40 and 56 hours per week:	10 points	
	Open less than 40 hours per week:	5 points	
6. Destination of Regional Significance as Identified by Stakeholders [2]	National Recognition:	20 points	
	Regional Recognition:	10 points	
	Local Recognition:	5 points	
		TOTAL POINTS	

Notes for Criteria Scores

[1]Employment Size

An attraction should report the total number of full-time employees or full-time equivalent for part-time employees, during the destination's peak season. For example, an employee that works 50 percent of a normal full-time employee should be counted as .5. Non-profit destinations can count volunteer staff, using the same method of the full-time equivalent calculation.

[2]Attraction of Regional Significance as Identified by Stakeholders

National Recognition:

Destination has a very high level of recognition among the general public across the United States, where little explanation is needed prior to arriving to the region or city. Examples may include the Statue of Liberty, Disney World, St. Louis Arch, or the White House.

Regional Recognition:

Regional Recognition: Destination is well known to the general public within a specific geographical region, such as the southeast or the east coast, or within a specific region of an individual state. Destination is generally associated to a region, may be used for regional business or is a learned tourism attraction upon arrival to a region. Examples may include The Newark Museum, the Philadelphia Zoo, Atlanta's Olympic Park, a County Courthouse, a Visitor Center.

Local Recognition:

Local Recognition: Destination is primarily used by the local community for business or recreation. This may also include small historic sites. Examples include a community park, post office, Local Historical Society/ History Museum, or "boyhood home" of a President.

ATTACHMENT B: WAYFINDING SIGNAGE SPECIFICATIONS

CITY OF BENTONVILLE
Bentonville, Arkansas

Wayfinding and Signage System

DESIGN INTENT DRAWINGS

September 29, 2014

merje
ENVIRONMENTS & EXPERIENCES

120 North Church Street
Suite 208
West Chester, PA 19380
T 484.266.0648
www.merjedesign.com

Table of Contents

Section 1 – SIGN SYSTEM STANDARDS

A. Graphic Standards
Typography Specifications A.1
Project Artwork A.5
Color Chart A.6

Section 2 – SIGNAGE DRAWINGS

B. Menu of Sign Types
Vehicular Signage System B.1
Pedestrian Signage System B.2
Gateway Sign Design Options B.3

C. Placement Guidelines
Vehicular Signage C.1-5

D. Design Intent Drawings
VDIR.1 Vehicular Directional D.1
VDIR.2 Vehicular Directional D.2
VDIR.3 Vehicular Directional D.3
VDIR.3ALT Vehicular Directional D.4
VDIR.4 Vehicular Directional D.5
VDIR.5 Vehicular Directional D.6
VDIR.6 Vehicular Directional D.7
TRAIL.1 Downtown Trailblazer D.8
BANNER.1 City Banners D.9
PARK.1 Parking Identification D.10
PARK.2 Parking Trailblazer D.11
PDIR.1 Pedestrian Directional D.12
PDIR.2 Pedestrian Directional D.13
KIOSK.1 Pedestrian Kiosk D.14
KIOSK.2 Pedestrian Kiosk D.15
GTWY.1 Major City Gateway D.16
GTWY.1a Major City Gateway D.17
GTWY.2 Secondary Gateway D.19
GTWY.4 Downtown Gateway D.20
GTWY.5 Downtown Gateway D.21

E. Graphic Layouts
VDIR.1-3 ..... E.1
VDIR.3ALT E.2
VDIR.4-6 ..... E.3
TRAIL.1 ..... E.4
PARK.1-2 ..... E.5
PDIR.1-2 ..... E.6

F. Construction Details
SiteLink TracLoc System F.1
SiteLink TracLoc System Details F.2
VDIR.4-6 Pole Section F.3
SignFix Channel Extrusion F.4
Kiosk Sections F.5
Transpo® PoleSafe Details F.6
Footer Details F.7
Transpo® Footer Placement Details F.8
J-Bolt Footer Details F.9
Footer Placement Details F.10

G. Performance Specifications
General G.1
Product G.3
Execution G.7

SECTION 1 | Sign System Standards

Clearview Highway

ABCDEFGHIJKLMNOPQRSTUVWXYZ

abcdefghijklmnopqrstuvwxyz

1234567890 ‘’!@#$%^

Amongst the several mechanical Arts that have engaged my attention, there is no one which I have pursued with so much steadiness and pleasure, as that of Letter Founding.

Downtown acceptable	Downtown NOT acceptable	Downtown NOT acceptable
123A acceptable	123A NOT acceptable	123A NOT acceptable

SPECIFICATIONS

All type shall be set exactly as specified. Substitutions will only be accepted, at the DESIGNER'S discretion, where they match the specified typeface in every detail. The FABRICATOR should be aware that different versions of typesetting equipment may not satisfactorily match specified typefaces and in such instances will not be acceptable.

Sometimes the Foot mark is mistaken for an apostrophe and an inch mark is mistaken for quotations. Below are examples of correct and incorrect apostrophe's for each typeface.

Clearview Highway

This apostrophe is CORRECT.

PARK'S

This apostrophe is INCORRECT.

PARK'S

NOTES

This typeface is the primary typeface for most of the vehicular signage.

ENVIRONMENTS & EXPERIENCES

merje

120 North Church Street
Suite 208
West Chester, PA 19380
T 484.266.0648
www.merjedesign.com

CLIENT / PROJECT

CITY OF BENTONVILLE
Bentonville, Arkansas
Wayfinding and Signage System

PROJECT NO. Y41.08062.000

SUBCONSULTANT

DATE 09/29/2014

DRAWN BY: PR

REVISIONS

SHEET TITLE

Typography Specifications

SHEET NO. **A.1**

These drawings are meant for DESIGN INTENT ONLY and are not for construction. Contractor shall verify and be responsible for all dimensions and conditions of the job. Contractor shall be familiar with the site and conditions it presents. This office must be notified of any variations from the dimensions and conditions shown on this drawing. Shop drawings and details must be submitted to this office for approval prior to proceeding with fabrication. All copy shall be proofread by client and legal requirements checked by legal department.

Futura Light

ABCDEFGHIJKLMNOPQRSTUVWXYZ
abcdefghijklmnopqrstuvwxyz
1234567890 ''!@#$%^

Amongst the several mechanical Arts that have engaged my attention, there is no one which I have pursued with so much steadiness and pleasure, as that of Letter Founding.

Downtown acceptable	Downtown NOT acceptable	Downtown NOT acceptable
123A acceptable	123A NOT acceptable	123A NOT acceptable

Futura Book

ABCDEFGHIJKLMNOPQRSTUVWXYZ
abcdefghijklmnopqrstuvwxyz
1234567890 ''!@#$%^

Amongst the several mechanical Arts that have engaged my attention, there is no one which I have pursued with so much steadiness and pleasure, as that of Letter Founding.

Downtown acceptable	Downtown NOT acceptable	Downtown NOT acceptable
123A acceptable	123A NOT acceptable	123A NOT acceptable

SPECIFICATIONS

All type shall be set exactly as specified. Substitutions will only be accepted, at the DESIGNER'S discretion, where they match the specified typeface in every detail. The FABRICATOR should be aware that different versions of typesetting equipment may not satisfactorily match specified typefaces and in such instances will not be acceptable.

Sometimes the Foot mark is mistaken for an apostrophe and an inch mark is mistaken for quotations. Below are examples of correct and incorrect apostrophe's for each typeface.

FUTURA LIGHT

This apostrophe is CORRECT.
PARK'S

This apostrophe is INCORRECT.
PARK'S

FUTURA BOOK

This apostrophe is CORRECT.
PARK'S

This apostrophe is INCORRECT.
PARK'S

NOTES

This typeface is a primary typeface and is used within the identity system.

ENVIRONMENTS & EXPERIENCES
merje
120 North Church Street
Suite 208
West Chester, PA 19380
T 484.266.0648
www.merjedesign.com

CLIENT / PROJECT
CITY OF BENTONVILLE
Bentonville, Arkansas
Wayfinding and Signage System

PROJECT NO. Y41.08062.000

SUBCONSULTANT

DATE 09/29/2014

DRAWN BY: PR

REVISIONS

SHEET TITLE
Typography Specifications

SHEET NO. **A.2**

These drawings are meant for DESIGN INTENT ONLY and are not for construction. Contractor shall verify and be responsible for all dimensions and conditions of the job. Contractor shall be familiar with the site and conditions it presents. This office must be notified of any variations from the dimensions and conditions shown on this drawing. Shop drawings and details must be submitted to this office for approval prior to proceeding with fabrication. All copy shall be proofread by client and legal requirements checked by legal department.

Futura Bold

ABCDEFGHIJKLMNOPQRSTUVWXYZ
abcdefghijklmnopqrstuvwxyz
1234567890 ‘’!@#$%^

Amongst the several mechanical Arts that have engaged my attention, there is no one which I have pursued with so much steadiness and pleasure, as that of Letter Founding.

Downtown
acceptable

Downtown
NOT acceptable

Downtown
NOT acceptable

123A
acceptable

123A
NOT acceptable

123A
NOT acceptable

Futura Condensed Medium

ABCDEFGHIJKLMNOPQRSTUVWXYZ
abcdefghijklmnopqrstuvwxyz
1234567890 ‘’!@#$%^

Amongst the several mechanical Arts that have engaged my attention, there is no one which I have pursued with so much steadiness and pleasure, as that of Letter Founding.

Downtown
acceptable

Downtown
NOT acceptable

Downtown
NOT acceptable

123A
acceptable

123A
NOT acceptable

123A
NOT acceptable

SPECIFICATIONS

All type shall be set exactly as specified. Substitutions will only be accepted, at the DESIGNER'S discretion, where they match the specified typeface in every detail. The FABRICATOR should be aware that different versions of typesetting equipment may not satisfactorily match specified typefaces and in such instances will not be acceptable.

Sometimes the Foot mark is mistaken for an apostrophe and an inch mark is mistaken for quotations. Below are examples of correct and incorrect apostrophe's for each typeface.

FUTURA BOLD

This apostrophe is CORRECT.
PARK'S

This apostrophe is INCORRECT.
PARK'S

FUTURA CONDENSED MEDIUM

This apostrophe is CORRECT.
PARK'S

This apostrophe is INCORRECT.
PARK'S

NOTES

This typeface is a secondary typeface and is used within the identity system.

ENVIRONMENTS & EXPERIENCES
merje
120 North Church Street
Suite 208
West Chester, PA 19380
T 484.266.0648
www.merjedesign.com

CLIENT / PROJECT
CITY OF BENTONVILLE
Bentonville, Arkansas
Wayfinding and Signage System

PROJECT NO. Y41.08062.000

SUBCONSULTANT

DATE 09/29/2014

DRAWN BY: PR

REVISIONS

SHEET TITLE
Typography Specifications

SHEET NO. **A.3**

These drawings are meant for DESIGN INTENT ONLY and are not for construction. Contractor shall verify and be responsible for all dimensions and conditions of the job. Contractor shall be familiar with the site and conditions it presents. This office must be notified of any variations from the dimensions and conditions shown on this drawing. Shop drawings and details must be submitted to this office for approval prior to proceeding with fabrication. All copy shall be proofread by client and legal requirements checked by legal department.

LETTER-SPACING

Inconsistencies in Letter Spacing

TYPEFACE 1

TYPEFACE 2

TYPEFACE 3

Corrected Letter Spacing

TYPEFACE 1

TYPEFACE 2

TYPEFACE 3

IMPORTANT: Individual spacing of each letter needs to be evaluated. See Examples Above.
Kern all Copy so that **each character is optically centered** between the center of each of the surrounding characters.

SIGN TEXT STANDARDS

COPY HEIGHT

When measuring copy height, measure only the height of the Capital letters to determine your overall copy height (shown in illustration below as "X") Some of the other letters have an extended height beyond the average height of the letters.

LINE SPACING

When measuring line spacing, always measure from the baseline of the topmost text line to the baseline of the text line below (shown as "X")

SPECIFICATIONS

Individual spacing of each letter needs to be evaluated. All copy shall be kerned so that each character is optically centered between the center of each of the surrounding characters.

NOTES

ENVIRONMENTS & EXPERIENCES

merje

120 North Church Street
Suite 208
West Chester, PA 19380
T 484.266.0648
www.merjedesign.com

CLIENT / PROJECT

CITY OF BENTONVILLE
Bentonville, Arkansas
Wayfinding and Signage System

PROJECT NO. Y41.08062.000

SUBCONSULTANT

DATE 09/29/2014

DRAWN BY: PR

REVISIONS

SHEET TITLE

Typography Specifications

SHEET NO. **A.4**

These drawings are meant for DESIGN INTENT ONLY and are not for construction. Contractor shall verify and be responsible for all dimensions and conditions of the job. Contractor shall be familiar with the site and conditions it presents. This office must be notified of any variations from the dimensions and conditions shown on this drawing. Shop drawings and details must be submitted to this office for approval prior to proceeding with fabrication. All copy shall be proofread by client and legal requirements checked by legal department.

GRAPHIC ELEMENTS

BELLA VISTA

BENTONVILLE

EUREKA SPRINGS

FAYETTEVILLE

LOWELL

ROGERS

SILOAM SPRINGS

SPRINGDALE

SYMBOLS

PARKING ICON

ARROWS

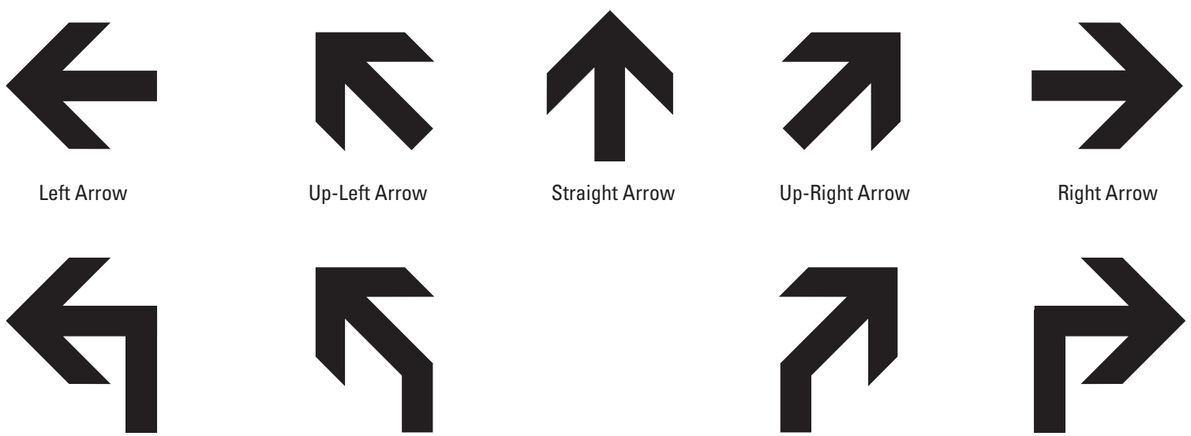

Left Arrow

Up-Left Arrow

Straight Arrow

Up-Right Arrow

Right Arrow

Straight-Left Arrow

Up-Straight-Left Arrow

Up-Straight-Right Arrow

Straight-Right Arrow

SPECIFICATIONS

All artwork pictured on this page will be provided to the sign fabricator by the designer and/or client. This artwork must be used for all sign applications in this provided documentation. Do NOT substitute with any other artwork!

USE of Arrows

When multiple directions are required on a sign, the following directional hierarchy shall take precedent. See Example below. Reference Message Schedule for individual Messages.

Straight Arrow

Left Arrow

Right Arrow

NOTES

ENVIRONMENTS & EXPERIENCES

merje

120 North Church Street
Suite 208
West Chester, PA 19380
T 484.266.0648
www.merjedesign.com

CLIENT / PROJECT

CITY OF BENTONVILLE
Bentonville, Arkansas
Wayfinding and Signage System

PROJECT NO. Y41.08062.000

SUBCONSULTANT

DATE 09/29/2014

DRAWN BY: PR

REVISIONS

SHEET TITLE

Project Artwork

SHEET NO.

A.5

These drawings are meant for DESIGN INTENT ONLY and are not for construction. Contractor shall verify and be responsible for all dimensions and conditions of the job. Contractor shall be familiar with the site and conditions it presents. This office must be notified of any variations from the dimensions and conditions shown on this drawing. Shop drawings and details must be submitted to this office for approval prior to proceeding with fabrication. All copy shall be proofread by client and legal requirements checked by legal department.

R REFLECTIVE VINYL	NAME	SPECIFICATION	APPLICABLE	PROCESS
R1	NWA White	3M High Intensity Prismatic Reflective Sheeting 3930 Color: White	Standard for System (typ.)	Knockout White: Background and Characters 3M custom inks direct to 3930 with 3M approved Clear UV/Graffiti overlaminate. *Applied according to Manufacturers Spec to aluminum sheet.
R2	NWA Blue	3M High Intensity Prismatic Reflective Sheeting 3930 Color Match: Matthews Paint MP 69566	Standard for System (typ.)	Custom Color: Background and Characters 3M custom inks direct to 3930 with 3M approved Clear UV/Graffiti overlaminate. *Applied according to Manufacturers Spec to aluminum sheet.
R3	NWA Red	3M High Intensity Prismatic Reflective Sheeting 3930 Color Match: Matthews Paint MP 38979	Standard for System (typ.)	Custom Color: Background and Characters 3M custom inks direct to 3930 with 3M approved Clear UV/Graffiti overlaminate. *Applied according to Manufacturers Spec to aluminum sheet.
R4	NWA Medium Blue	To Match Pantone® 306c	Standard for System (typ.)	Custom Color: Background and Characters 3M custom inks direct to 3930 with 3M approved Clear UV/Graffiti overlaminate. *Applied according to Manufacturers Spec to aluminum sheet.
R5	BV Water	To Match Pantone® 326c	City of Bella Vista	Custom Color: Background and Characters 3M custom inks direct to 3930 with 3M approved Clear UV/Graffiti overlaminate. *Applied according to Manufacturers Spec to aluminum sheet.
R6	BV Green	To Match Pantone® 349c	City of Bella Vista	Custom Color: Background and Characters 3M custom inks direct to 3930 with 3M approved Clear UV/Graffiti overlaminate. *Applied according to Manufacturers Spec to aluminum sheet.
R7	ES Purple	To Match Pantone® 261c	City of Eureka Springs	Custom Color: Background and Characters 3M custom inks direct to 3930 with 3M approved Clear UV/Graffiti overlaminate. *Applied according to Manufacturers Spec to aluminum sheet.
R8	ES Green	To Match Pantone® 7490c	City of Eureka Springs	Custom Color: Background and Characters 3M custom inks direct to 3930 with 3M approved Clear UV/Graffiti overlaminate. *Applied according to Manufacturers Spec to aluminum sheet.
R9	ES Yellow	To Match Pantone® 726c	City of Eureka Springs	Custom Color: Background and Characters 3M custom inks direct to 3930 with 3M approved Clear UV/Graffiti overlaminate. *Applied according to Manufacturers Spec to aluminum sheet.
R10	ES Blue	To Match Pantone® 7446c	City of Eureka Springs	Custom Color: Background and Characters 3M custom inks direct to 3930 with 3M approved Clear UV/Graffiti overlaminate. *Applied according to Manufacturers Spec to aluminum sheet.
R11	F Dark Green	To Match Pantone® 357c	City of Fayetteville	Custom Color: Background and Characters 3M custom inks direct to 3930 with 3M approved Clear UV/Graffiti overlaminate. *Applied according to Manufacturers Spec to aluminum sheet.
R12	F Dark Red	To Match Pantone® 188c	City of Fayetteville	Custom Color: Background and Characters 3M custom inks direct to 3930 with 3M approved Clear UV/Graffiti overlaminate. *Applied according to Manufacturers Spec to aluminum sheet.
R13	R Bright Green	To Match Pantone® 583c	City of Rogers	Custom Color: Background and Characters 3M custom inks direct to 3930 with 3M approved Clear UV/Graffiti overlaminate. *Applied according to Manufacturers Spec to aluminum sheet.
R14	SS Bright Blue	To Match Pantone® 300c	City of Siloam Springs	Custom Color: Background and Characters 3M custom inks direct to 3930 with 3M approved Clear UV/Graffiti overlaminate. *Applied according to Manufacturers Spec to aluminum sheet.
R15	SS Apple Green	To Match Pantone® 376c	City of Siloam Springs	Custom Color: Background and Characters 3M custom inks direct to 3930 with 3M approved Clear UV/Graffiti overlaminate. *Applied according to Manufacturers Spec to aluminum sheet.

* MUST comply with MUTCD section Table 2A-3 – Minimum maintained retroreflectivity levels. Approved process: Durst RHO 161 TS printer. Sherine Industries: (604) 513-1887.
NOTE: All 3M products are to be processed and applied according to 3M specifications. The seaming of material is NOT preferred. If the height of a sign panel is greater then 48 inches, the 3M 3930 material should be oriented vertically with stripes at 0 degrees, to avoid the seaming of material. If seaming is required, it should occur at the rule line or between messages.

V VINYL	NAME	SPECIFICATION	APPLICABLE	PROCESS
V1	NWA White	3M Scotchcal Opaque Vinyl Color: 180C-10 White	Standard for System (typ.)	Surface applied according to 3M manufacturers specifications.
V2	NWA Blue	3M Scotchcal Opaque Vinyl Color: 180C-197 Light Navy	Standard for System (typ.)	Surface applied according to 3M manufacturers specifications.
V3	NWA Red	3M Scotchcal Opaque Vinyl Color: 180C-68 Dark Burgundy	Standard for System (typ.)	Surface applied according to 3M manufacturers specifications.
V4	NWA Medium Blue	3M Scotchcal Opaque Vinyl Color: 180C-417 Sky Blue	Standard for System (typ.)	Surface applied according to 3M manufacturers specifications.
V5	NWA Black	3M Scotchcal Opaque Vinyl Color: 7725-12 Black	Standard for System (typ.)	Surface applied according to 3M manufacturers specifications.
V6	Silver	3M Scotchcal ElectroCut Graphic Film 3M 3630-121 Pantone® 877	Standard for System (typ.)	Surface applied according to 3M manufacturers specifications.
V7				
V8				

SPECIFICATIONS

The FABRICATOR must submit three (3) identical sets of each color specified for approval prior to any painting. Sample paint swatches must be produced on .080" aluminum sheet, approximately 3" x 6", including primer and free of defects. Sample material swatches should be the same approximate size. Samples MUST have project and color specifications attached to back side.

The colors must look exactly the same every time they are used so that people associate them with the Northwest Arkansas Regional Wayfinding Program. All media, vinyl, paint, and inks must be produced so that the colors match as specified on this page.

NOTE: Not all reflective vinyl and opaque/translucent vinyl colors apply to the City of Bentonville Wayfinding and Signage System. Bentonville is part of the Northwest Arkansas Regional Signage Program, and many of the additional colors identified on these pages are colors for the other cities.

NOTES

ENVIRONMENTS & EXPERIENCES

merje

120 North Church Street
Suite 208
West Chester, PA 19380
T 484.266.0648
www.merjedesign.com

CLIENT / PROJECT

CITY OF BENTONVILLE
Bentonville, Arkansas
Wayfinding and Signage System

PROJECT NO. Y41.08062.000

SUBCONSULTANT

DATE 09/29/2014

DRAWN BY: PR

REVISIONS

SHEET TITLE

Reflective and Opaque Vinyl Color Chart

SHEET NO.

A.6

These drawings are meant for DESIGN INTENT ONLY and are not for construction. Contractor shall verify and be responsible for all dimensions and conditions of the job. Contractor shall be familiar with the site and conditions it presents. This office must be notified of any variations from the dimensions and conditions shown on this drawing. Shop drawings and details must be submitted to this office for approval prior to proceeding with fabrication. All copy shall be proofread by client and legal requirements checked by legal department.

P PAINTS	NAME	SPECIFICATION	APPLICABLE	PROCESS
P1	NWA White	Matthews Paint MP 11477	Standard for System (typ.)	Surface applied, exterior sign paint and protective top coat: MATTHEWS Acrylic Polyurethane with Clear Coat Satin finish.
P2	NWA Blue	Matthews Paint MP 69566	Standard for System (typ.)	Surface applied, exterior sign paint and protective top coat: MATTHEWS Acrylic Polyurethane with Clear Coat Satin finish.
P3	NWA Red	Matthews Paint MP 38979	Standard for System (typ.)	Surface applied, exterior sign paint and protective top coat: MATTHEWS Acrylic Polyurethane with Clear Coat Satin finish.
P4	NWA Light Silver Metallic	Matthews Paint MP 18074	Standard for System (typ.)	Surface applied, exterior sign paint and protective top coat: MATTHEWS Acrylic Polyurethane with Clear Coat Satin finish.
P5	NWA Metallic Black	To Match Akzo Nobel CM626G5	Standard for System (typ.)	Surface applied, exterior sign paint and protective top coat: MATTHEWS Acrylic Polyurethane with Clear Coat Satin finish.
P6	NWA Silver (Poles)	Holophane® Powder Coat Standard Silver D8	Standard for System (typ.)	Sherwin Williams Powdura® Powder Coating, as specified per Holophane® outdoor lighting products.
P7	NWA Green (Poles)	Holophane® Powder Coat Standard Dark Green D4	Standard for System (typ.)	Sherwin Williams Powdura® Powder Coating, as specified per Holophane® outdoor lighting products.
P8	Brown (Poles)	Holophane® Powder Coat Standard Bronze PDS4-00002	City of Rogers	Sherwin Williams Powdura® Powder Coating, as specified per Holophane® outdoor lighting products.
P9	NWA Grey	Matthews Paint MP 11316	Standard for System (typ.)	Surface applied, exterior sign paint and protective top coat: MATTHEWS Acrylic Polyurethane with Clear Coat Satin finish.
P10	NWA Medium Blue	To Match Pantone® 306c	Standard for System (typ.)	Surface applied, exterior sign paint and protective top coat: MATTHEWS Acrylic Polyurethane with Clear Coat Satin finish.
P11	NWA Light Blue	To Match Pantone® 304c	Standard for System (typ.)	Surface applied, exterior sign paint and protective top coat: MATTHEWS Acrylic Polyurethane with Clear Coat Satin finish.
P12	BV Water	To Match Pantone® 326c	City of Bella Vista	Surface applied, exterior sign paint and protective top coat: MATTHEWS Acrylic Polyurethane with Clear Coat Satin finish.
P13	BV Green	To Match Pantone® 349c	City of Bella Vista	Surface applied, exterior sign paint and protective top coat: MATTHEWS Acrylic Polyurethane with Clear Coat Satin finish.
P14	ES Purple	To Match Pantone® 261c	City of Eureka Springs	Surface applied, exterior sign paint and protective top coat: MATTHEWS Acrylic Polyurethane with Clear Coat Satin finish.
P15	ES Light Purple	To Match Pantone® 2415c	City of Eureka Springs	Surface applied, exterior sign paint and protective top coat: MATTHEWS Acrylic Polyurethane with Clear Coat Satin finish.
P16	ES Green	To Match Pantone® 7490c	City of Eureka Springs	Surface applied, exterior sign paint and protective top coat: MATTHEWS Acrylic Polyurethane with Clear Coat Satin finish.
P17	ES Yellow	To Match Pantone® 726c	City of Eureka Springs	Surface applied, exterior sign paint and protective top coat: MATTHEWS Acrylic Polyurethane with Clear Coat Satin finish.
P18	ES Blue	To Match Pantone® 7446c	City of Eureka Springs	Surface applied, exterior sign paint and protective top coat: MATTHEWS Acrylic Polyurethane with Clear Coat Satin finish.
P19	F Dark Green	To Match Pantone® 357c	City of Fayetteville	Surface applied, exterior sign paint and protective top coat: MATTHEWS Acrylic Polyurethane with Clear Coat Satin finish.
P20	F Dark Red	To Match Pantone® 188c	City of Fayetteville	Surface applied, exterior sign paint and protective top coat: MATTHEWS Acrylic Polyurethane with Clear Coat Satin finish.
P21	R Bright Green	To Match Pantone® 583c	City of Rogers	Surface applied, exterior sign paint and protective top coat: MATTHEWS Acrylic Polyurethane with Clear Coat Satin finish.
P22	SS Bright Blue	To Match Pantone® 300c	City of Siloam Springs	Surface applied, exterior sign paint and protective top coat: MATTHEWS Acrylic Polyurethane with Clear Coat Satin finish.
P23	SS Apple Green	To Match Pantone® 376c	City of Siloam Springs	Surface applied, exterior sign paint and protective top coat: MATTHEWS Acrylic Polyurethane with Clear Coat Satin finish.
P24	S Chicken Feet Red	To Match Pantone® 1785c	City of Springdale	Surface applied, exterior sign paint and protective top coat: MATTHEWS Acrylic Polyurethane with Clear Coat Satin finish.

SPECIFICATIONS

The FABRICATOR must submit three (3) identical sets of each color specified for approval prior to any painting. Sample paint swatches must be produced on .080" aluminum sheet, approximately 3" x 6", including primer and free of defects. Sample material swatches should be the same approximate size. Samples MUST have project and color specifications attached to back side.

The colors must look exactly the same every time they are used so that people associate them with the Northwest Arkansas Regional Wayfinding Program. All media, vinyl, paint, and inks must be produced so that the colors match as specified on this page.

NOTE: Not all the paint colors apply to the City of Bentonville Wayfinding and Signage System. Bentonville is part of the Northwest Arkansas Regional Signage Program, and many of the additional colors identified on these pages are colors for the other cities.

NOTES

ENVIRONMENTS & EXPERIENCES

merje

120 North Church Street
Suite 208
West Chester, PA 19380
T 484.266.0648
www.merjedesign.com

CLIENT / PROJECT

CITY OF BENTONVILLE
Bentonville, Arkansas
Wayfinding and Signage System

PROJECT NO. Y41.08062.000

SUBCONSULTANT

DATE 09/29/2014

DRAWN BY: PR

REVISIONS

SHEET TITLE

Paint Color Chart

SHEET NO.

A.7

These drawings are meant for DESIGN INTENT ONLY and are not for construction. Contractor shall verify and be responsible for all dimensions and conditions of the job. Contractor shall be familiar with the site and conditions it presents. This office must be notified of any variations from the dimensions and conditions shown on this drawing. Shop drawings and details must be submitted to this office for approval prior to proceeding with fabrication. All copy shall be proofread by client and legal requirements checked by legal department.

SECTION 2 | Signage Drawings

C | Menu of Sign Types

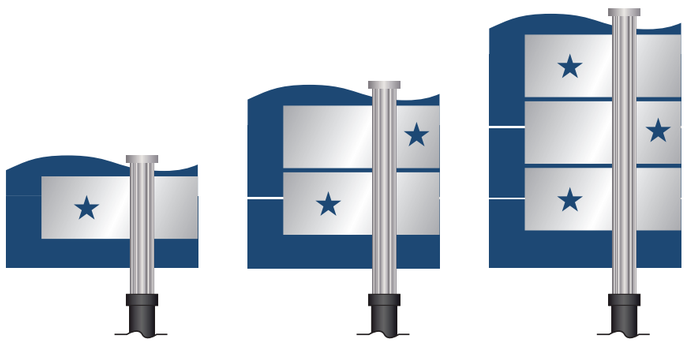

Back Side

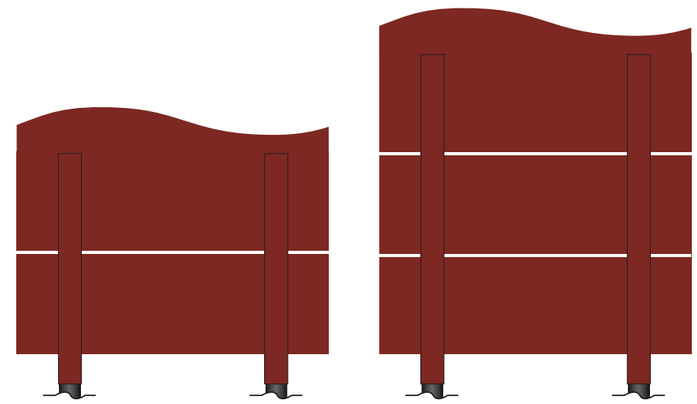

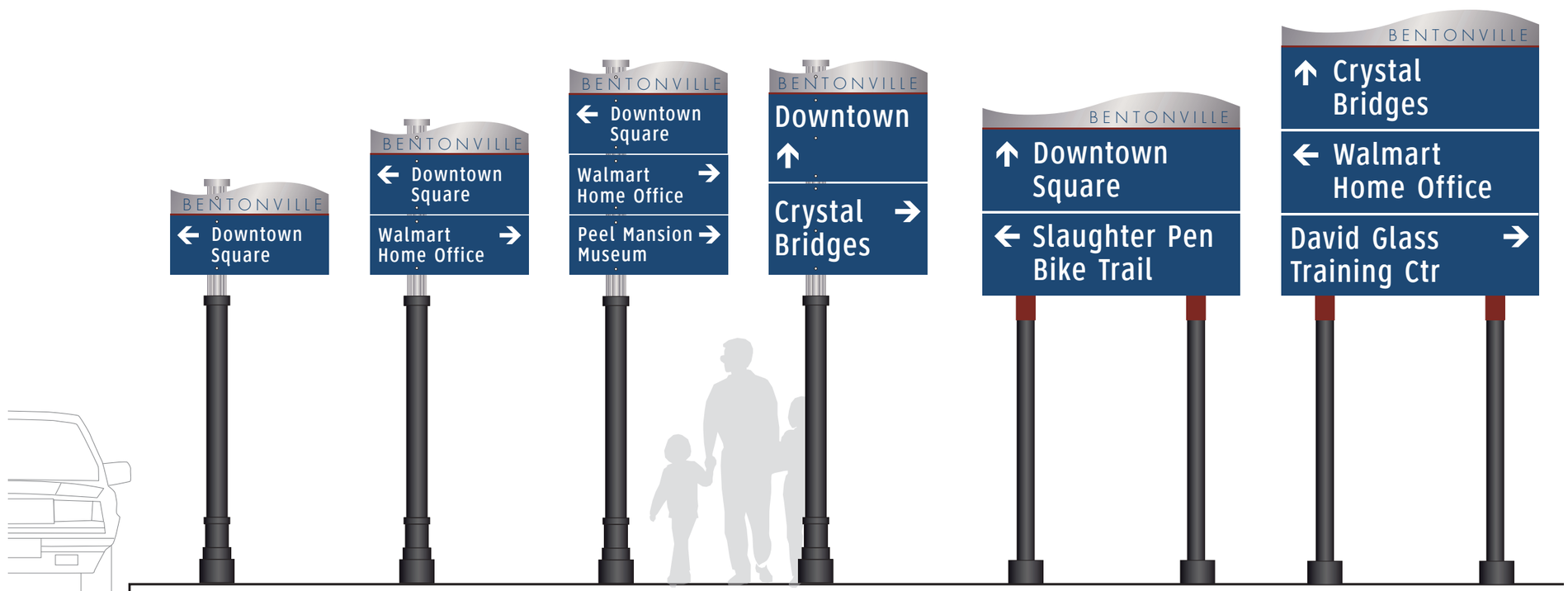

Vehicular Directional
VDIR.1
(4 inch Message; 25mph or less)

Vehicular Directional
VDIR.2
(4 inch Message; 25mph or less)

Vehicular Directional
VDIR.3
(4 inch Message; 25mph or less)

Vehicular Directional
VDIR.3ALT
(6 inch Message; 30mph or more)

Vehicular Directional
VDIR.5
(6 inch Message; 30mph or more)

Vehicular Directional
VDIR.6
(6 inch Message; 30mph or more)

SPECIFICATIONS

City of Bentonville, Arkansas

Vehicular Directional
Signage System Overview

VDIR.1: Vehicular Directional - 1 message
VDIR.2: Vehicular Directional - 2 messages
VDIR.3: Vehicular Directional - 3 messages
VDIR.3ALT: Vehicular Directional - 2 messages
VDIR.5: Vehicular Directional - 2 messages
VDIR.6: Vehicular Directional - 3 messages

Not Shown - See page D.5
VDIR.4: Vehicular Directional - 1 message

NOTES:
1. Fabricator to verify the mounting conditions and provide a detail drawing for each mounting situation, prior to fabrication. Fabricator must obtain approval from the Designer or Client for placement prior to fabrication.
2. Welds: All welds shall be ground smooth, paint all seams.
3. Hardware: All exposed hardware shall be tamper proof fasteners.
4. All exposed edges painted to match adjacent face.

ENVIRONMENTS & EXPERIENCES

merje

120 North Church Street
Suite 208
West Chester, PA 19380
T 484.266.0648
www.merjedesign.com

DATE 09/29/2014

DRAWN BY: PR

These drawings are meant for DESIGN INTENT ONLY and are not for construction. Contractor shall verify and be responsible for all dimensions and conditions of the job. Contractor shall be familiar with the site and conditions it presents. This office must be notified of any variations from the dimensions and conditions shown on this drawing. Shop drawings and details must be submitted to this office for approval prior to proceeding with fabrication. All copy shall be proofread by client and legal requirements checked by legal department.

REVISIONS

CLIENT / PROJECT

CITY OF BENTONVILLE
Bentonville, Arkansas
Wayfinding and Signage System

PROJECT NO. Y41.08062.000

SHEET TITLE

Bentonville
Vehicular Directional
Signage System Overview

SHEET NO.

B.1

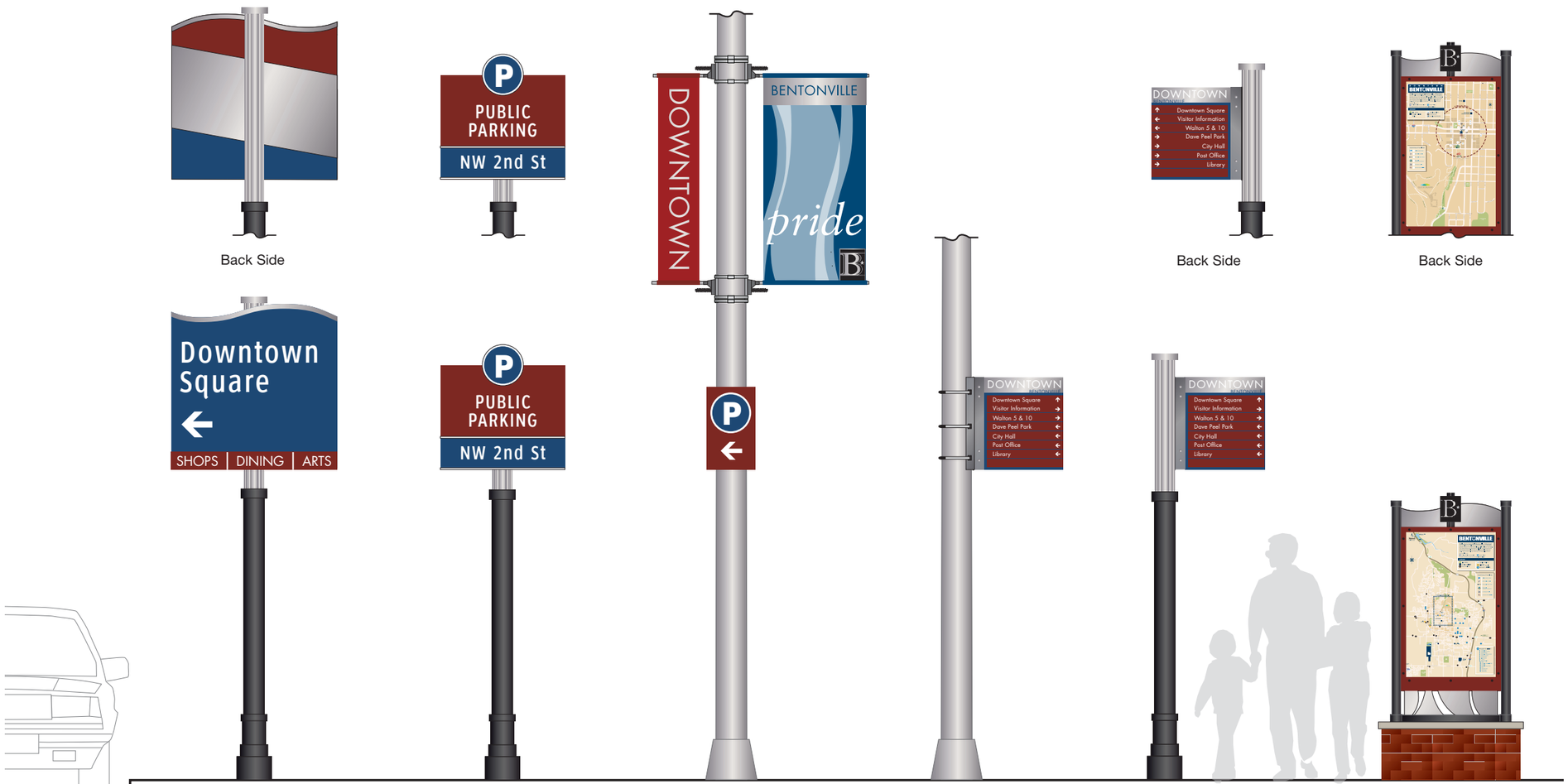

SPECIFICATIONS

City of Bentonville, Arkansas

Downtown Trailblazer,
Parking and Pedestrian
Signage System Overview

TRAIL.1: Downtown Trailblazer
PARK.1: Parking Lot Identification
PARK.2: Parking Trailblazer
BANNER.1: City Banners
PDIR.1: Pedestrian Directional - Up to 8 messages
PDIR.2: Pedestrian Directional - Up to 8 messages
KIOSK.2: Information Kiosk – Brick Base

Not Shown - See page D.13
KIOSK.1: Information Kiosk – 2 Poles

NOTES:
1. Fabricator to verify the mounting conditions and provide a detail drawing for each mounting situation, prior to fabrication. Fabricator must obtain approval from the Designer or Client for placement prior to fabrication.
2. Welds: All welds shall be ground smooth, paint all seams.
3. Hardware: All exposed hardware shall be tamper proof fasteners.
4. All exposed edges painted to match adjacent face.

ENVIRONMENTS & EXPERIENCES

merje

120 North Church Street
Suite 208
West Chester, PA 19380
T 484.266.0648
www.merjedesign.com

DATE 09/29/2014

DRAWN BY: PR

These drawings are meant for DESIGN INTENT ONLY and are not for construction. Contractor shall verify and be responsible for all dimensions and conditions of the job. Contractor shall be familiar with the site and conditions it presents. This office must be notified of any variations from the dimensions and conditions shown on this drawing. Shop drawings and details must be submitted to this office for approval prior to proceeding with fabrication. All copy shall be proofread by client and legal requirements checked by legal department.

REVISIONS

CLIENT / PROJECT

CITY OF BENTONVILLE
Bentonville, Arkansas
Wayfinding and Signage System

PROJECT NO. Y41.08062.000

SHEET TITLE

Bentonville
Downtown Trailblazer,
Parking & Pedestrian
Signage System Overview

SHEET NO.

B.2

City Gateway
GTWY.2
(Secondary Gateway Entrance to City)

Downtown Gateway
GTWY.4

Downtown Gateway
GTWY.5

City Gateway
GTWY.1
(Major Gateway Entrance to City)

City Gateway
GTWY.1a
(Major Gateway Entrance to City)

SPECIFICATIONS

NWA SIGNAGE SYSTEM

Gateway Sign options for each City

GTWY.1: Major City Gateway – 9'-4" wide
GTWY.1a: Major City Gateway – 12'-0" wide
GTWY.2: Secondary City Gateway
GTWY.4: Downtown Gateway
GTWY.5: Downtown Gateway

NOTES:
1. Fabricator to verify the mounting conditions and provide a detail drawing for each mounting situation, prior to fabrication. Fabricator must obtain approval from the Designer or Client for placement prior to fabrication.
2. Welds: All welds shall be ground smooth, paint all seams.
3. Hardware: All exposed hardware shall be tamper proof fasteners.
4. All exposed edges painted to match adjacent face.

ENVIRONMENTS & EXPERIENCES

merje

120 North Church Street
Suite 208
West Chester, PA 19380
T 484.266.0648
www.merjedesign.com

DATE 09/29/2014

DRAWN BY: PR

These drawings are meant for DESIGN INTENT ONLY and are not for construction. Contractor shall verify and be responsible for all dimensions and conditions of the job. Contractor shall be familiar with the site and conditions it presents. This office must be notified of any variations from the dimensions and conditions shown on this drawing. Shop drawings and details must be submitted to this office for approval prior to proceeding with fabrication. All copy shall be proofread by client and legal requirements checked by legal department.

REVISIONS

CLIENT / PROJECT

CITY OF BENTONVILLE
Bentonville, Arkansas
Wayfinding and Signage System

PROJECT NO. Y41.08062.000

SHEET TITLE

Bentonville
Gateway options

SHEET NO.

B.3

C | Placement Guidelines

Figure 1

Sign A: VDIR.1-6

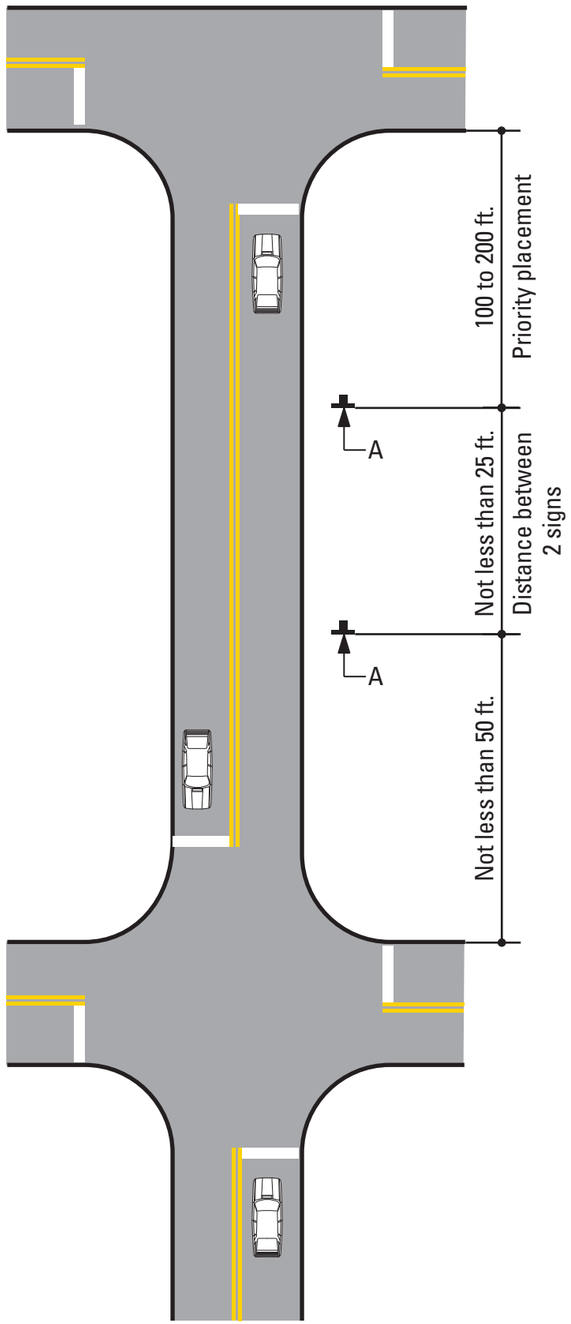

Figure 2

Sign B: DEST.1 or PARK.1

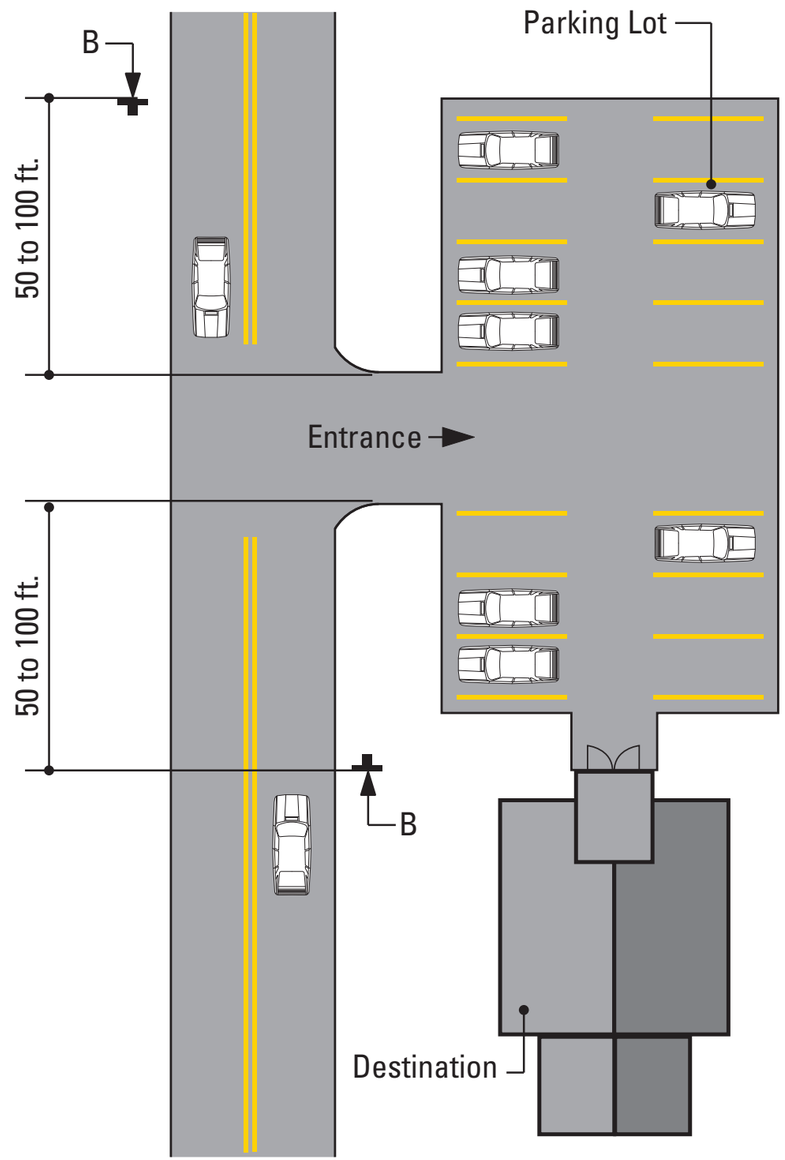

SPECIFICATIONS

FIGURE 1 - Vehicular Directional - Sign Placement Guideline
FIGURE 2 - Destination Arrival or Parking Identification - Sign Placement Guideline

Unless approved by the Client or its designated agent, all signs shall be installed to the right of the direction of traffic and where sufficient space is available.

(a) Signs shall be located to take advantage of natural terrain, to minimize impacts on scenic environment and to avoid visual conflicts with other signs, trees and lampposts within the City right-of-way.

(b) Signs shall be located so as not to interfere with, obstruct or divert driver's attention from any other Official Traffic Control Device. Other Official Traffic Control Devices placed at intersection approaches, subsequent to the placement of a Wayfinding Sign, shall have precedence as to location and may require the relocation of the Wayfinding Sign. In the locations where Official Traffic Control Devices are integrated into the Wayfinding Signage System, the Official Traffic Control Devices shall take precedence with regard to order, space and location, over other information.

(c) Wayfinding Signs shall be positioned in such a manner that does not restrict driver's attention or view when making turns or driving through an intersection.

(d) There shall be a goal of one sign per block, although two are permissible, where necessary.

The following pages illustrate installation guidelines for the location and spacing of the various sign types. Figures 1 through 6 represent the guidelines for the location of the various sign types, while Figure 7 illustrates the lateral clearance guidelines.

NOTES

ENVIRONMENTS & EXPERIENCES

merje

120 North Church Street
Suite 208
West Chester, PA 19380
T 484.266.0648
www.merjedesign.com

CLIENT / PROJECT

CITY OF BENTONVILLE
Bentonville, Arkansas
Wayfinding and Signage System

PROJECT NO. Y41.08062.000

SUBCONSULTANT

DATE 09/29/2014

DRAWN BY: PR

REVISIONS

SHEET TITLE

Sign Placement Guidelines

SHEET NO.

C.1

These drawings are meant for DESIGN INTENT ONLY and are not for construction. Contractor shall verify and be responsible for all dimensions and conditions of the job. Contractor shall be familiar with the site and conditions it presents. This office must be notified of any variations from the dimensions and conditions shown on this drawing. Shop drawings and details must be submitted to this office for approval prior to proceeding with fabrication. All copy shall be proofread by client and legal requirements checked by legal department.

Figure 3

Sign C: VDIR.4-6

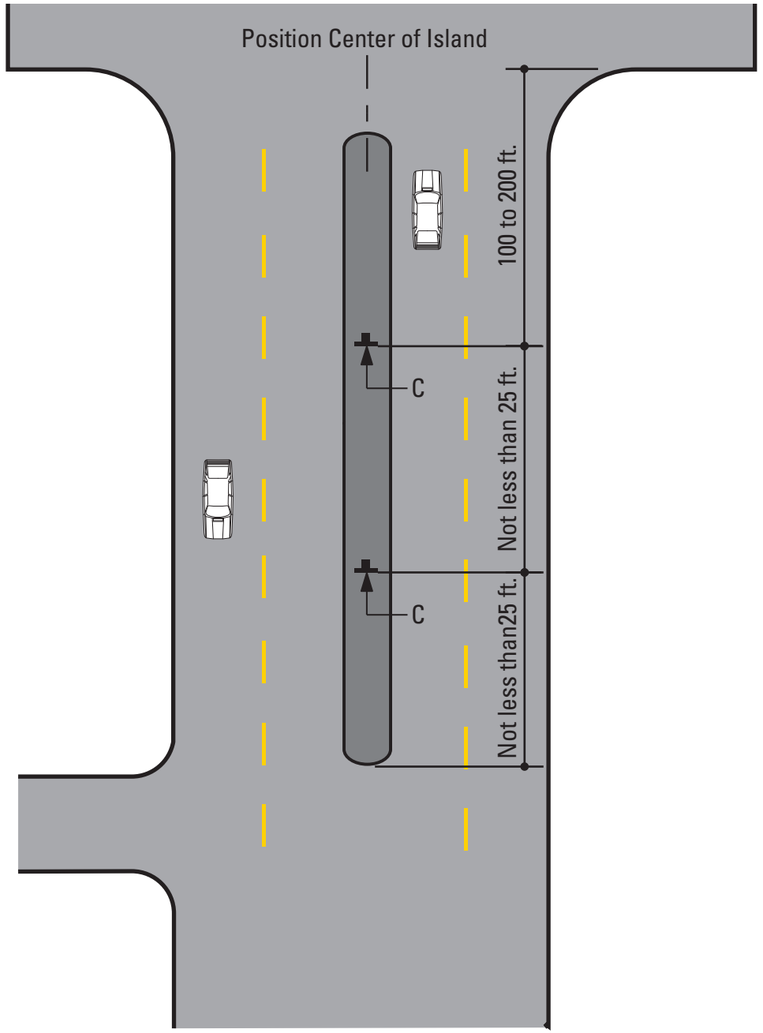

Figure 4

Sign D: VDIR.1-6

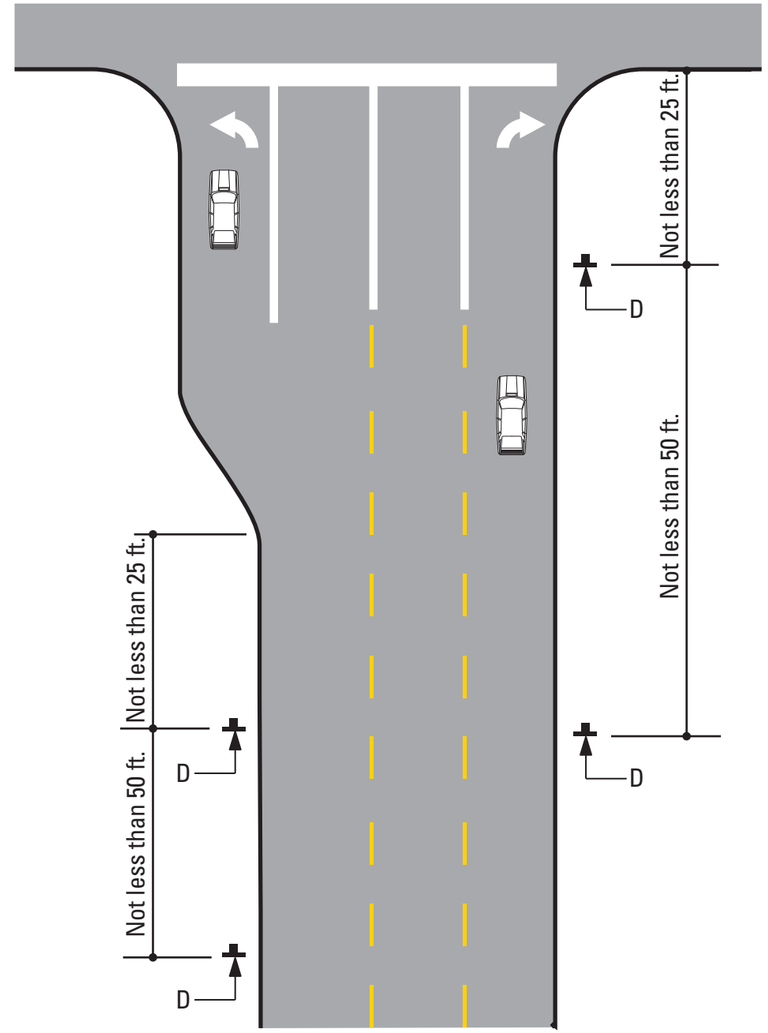

SPECIFICATIONS

FIGURE 3 - Vehicular Directional - Sign Placement Guideline
FIGURE 4 - Vehicular Directional - Sign Placement Guideline

Unless approved by the Client or its designated agent, all signs shall be installed to the right of the direction of traffic and where sufficient space is available.

(a) Signs shall be located to take advantage of natural terrain, to minimize impacts on scenic environment and to avoid visual conflicts with other signs, trees and lampposts within the City right-of-way.

(b) Signs shall be located so as not to interfere with, obstruct or divert driver's attention from any other Official Traffic Control Device. Other Official Traffic Control Devices placed at intersection approaches, subsequent to the placement of a Wayfinding Sign, shall have precedence as to location and may require the relocation of the Wayfinding Sign. In the locations where Official Traffic Control Devices are integrated into the Wayfinding Signage System, the Official Traffic Control Devices shall take precedence with regard to order, space and location, over other information.

(c) Wayfinding Signs shall be positioned in such a manner that does not restrict driver's attention or view when making turns or driving through an intersection.

(d) There shall be a goal of one sign per block, although two are permissible, where necessary.

The following pages illustrate installation guidelines for the location and spacing of the various sign types. Figures 1 through 6 represent the guidelines for the location of the various sign types, while Figure 7 illustrates the lateral clearance guidelines.

NOTES

ENVIRONMENTS & EXPERIENCES

merje

120 North Church Street
Suite 208
West Chester, PA 19380
T 484.266.0648
www.merjedesign.com

CLIENT / PROJECT

CITY OF BENTONVILLE
Bentonville, Arkansas
Wayfinding and Signage System

PROJECT NO. Y41.08062.000

SUBCONSULTANT

DATE 09/29/2014

DRAWN BY: PR

REVISIONS

SHEET TITLE

Sign Placement Guidelines

SHEET NO.

C.2

These drawings are meant for DESIGN INTENT ONLY and are not for construction. Contractor shall verify and be responsible for all dimensions and conditions of the job. Contractor shall be familiar with the site and conditions it presents. This office must be notified of any variations from the dimensions and conditions shown on this drawing. Shop drawings and details must be submitted to this office for approval prior to proceeding with fabrication. All copy shall be proofread by client and legal requirements checked by legal department.

Figure 5

Sign E: GATEWAY or DISTRICT

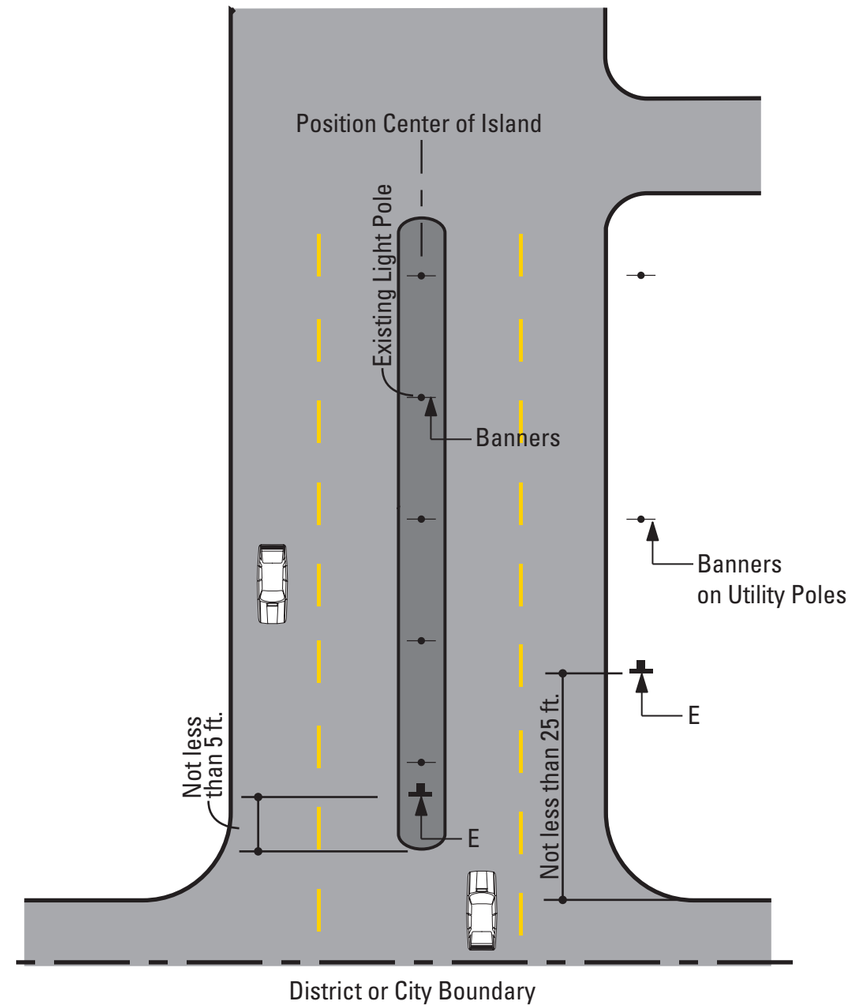

SPECIFICATIONS

FIGURE 5 - Gateway/District Arrival-Vehicular - Sign Placement Guideline

Unless approved by the Client or its designated agent, all signs shall be installed to the right of the direction of traffic and where sufficient space is available.

(a) Signs shall be located to take advantage of natural terrain, to minimize impacts on scenic environment and to avoid visual conflicts with other signs, trees and lampposts within the City right-of-way.

(b) Signs shall be located so as not to interfere with, obstruct or divert driver's attention from any other Official Traffic Control Device. Other Official Traffic Control Devices placed at intersection approaches, subsequent to the placement of a Wayfinding Sign, shall have precedence as to location and may require the relocation of the Wayfinding Sign. In the locations where Official Traffic Control Devices are integrated into the Wayfinding Signage System, the Official Traffic Control Devices shall take precedence with regard to order, space and location, over other information.

(c) Wayfinding Signs shall be positioned in such a manner that does not restrict driver's attention or view when making turns or driving through an intersection.

(d) There shall be a goal of one sign per block, although two are permissible, where necessary.

The following pages illustrate installation guidelines for the location and spacing of the various sign types. Figures 1 through 6 represent the guidelines for the location of the various sign types, while Figure 7 illustrates the lateral clearance guidelines.

NOTES

ENVIRONMENTS & EXPERIENCES

merje

120 North Church Street
Suite 208
West Chester, PA 19380
T 484.266.0648
www.merjedesign.com

CLIENT / PROJECT

CITY OF BENTONVILLE
Bentonville, Arkansas
Wayfinding and Signage System

PROJECT NO. Y41.08062.000

SUBCONSULTANT

DATE 09/29/2014

DRAWN BY: PR

REVISIONS

SHEET TITLE

Sign Placement Guidelines

SHEET NO.

C.3

These drawings are meant for DESIGN INTENT ONLY and are not for construction. Contractor shall verify and be responsible for all dimensions and conditions of the job. Contractor shall be familiar with the site and conditions it presents. This office must be notified of any variations from the dimensions and conditions shown on this drawing. Shop drawings and details must be submitted to this office for approval prior to proceeding with fabrication. All copy shall be proofread by client and legal requirements checked by legal department.

Figure 6

Not to Scale

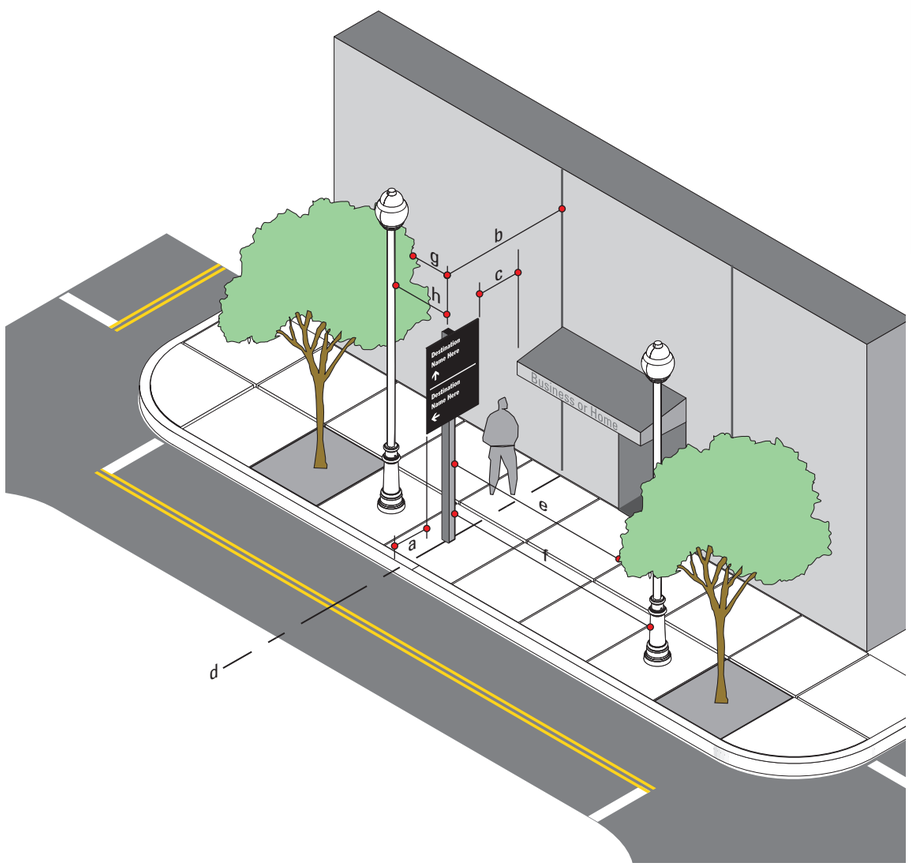

SIGN TYPE	MEASURE	PREFFERED DISTANCE	MINIMUM DISTANCE
a	Distance from Edge of Sign Panel to Edge of Curb	2'-0" or more	1' - 0"
b	Distance from Sign Post to Nearest Obstruction	4' - 0" or more	3' - 0"
c	Distance from Edge of Sign Panel to Nearest Overhead Obstruction	4' - 0" or more	1' - 0"
d	Sign Placement in Relation to Adjacent Building	align to building Edge	Do Not obstruct Entrance
e	Distance from Face of Sign to Nearest Tree Branch	20' - 0" or more	15' - 0"
f	Distance from Face of Sign to Nearest Utlity Pole	15' - 0" or more	10' - 0"
g	Distance from Back of Sign to Nearest Tree Branch	8' - 0" or more	3' - 0"
h	Distance from Back of Sign to Nearest Utility Pole	15' - 0" or more	10' - 0"

Measurements and Distances shown are guidelines only prevailing local and state codes shall supersede information presented.

SPECIFICATIONS

FIGURE 6 - Lateral Clearance Guidelines

Within some of the Downtown areas of Bentonville, urban conditions and narrow sidewalks may cause deviation from the standards articulated in the previous figures. Conditions may include less lateral clearance for the 2'-0" or 5'-0" preferred distance from edge of sign panel to curb, or placement at 2'-0" or 5'-0" would create an obstacle (i.e. post positioned in middle of the side walk) or create situations of non-compliance to ADA clearances.

In these cases guidelines must be consistent with MUTCD Section 2A.19 options for urban areas.

Suggested recommendations for relocation of signs if placement is in conflict with guidelines.

OPTION A: Position the sign at a minimum of 2'-0" or 5'-0" (face of curb to edge of sign panel) as required.

OPTION B: If the sign can be moved, without disrupting routing or sequencing, then it should be repositioned to achieve the 2'-0" or 5'-0" min.

If 2'-0" is not physically possible, then the following options should be allowed:

OPTION C: The sign set back should be position at 1'-6". If that is not possible then...

OPTION D: Utilize a minimum 1'- 0", in accordance with MUTCD, only as a final option.

NOTES

ENVIRONMENTS & EXPERIENCES

merje

120 North Church Street
Suite 208
West Chester, PA 19380
T 484.266.0648
www.merjedesign.com

CLIENT / PROJECT

CITY OF BENTONVILLE
Bentonville, Arkansas
Wayfinding and Signage System

PROJECT NO. Y41.08062.000

SUBCONSULTANT

DATE 09/29/2014

DRAWN BY: PR

REVISIONS

SHEET TITLE

Sign Placement Guidelines

SHEET NO.

C.4

These drawings are meant for DESIGN INTENT ONLY and are not for construction. Contractor shall verify and be responsible for all dimensions and conditions of the job. Contractor shall be familiar with the site and conditions it presents. This office must be notified of any variations from the dimensions and conditions shown on this drawing. Shop drawings and details must be submitted to this office for approval prior to proceeding with fabrication. All copy shall be proofread by client and legal requirements checked by legal department.

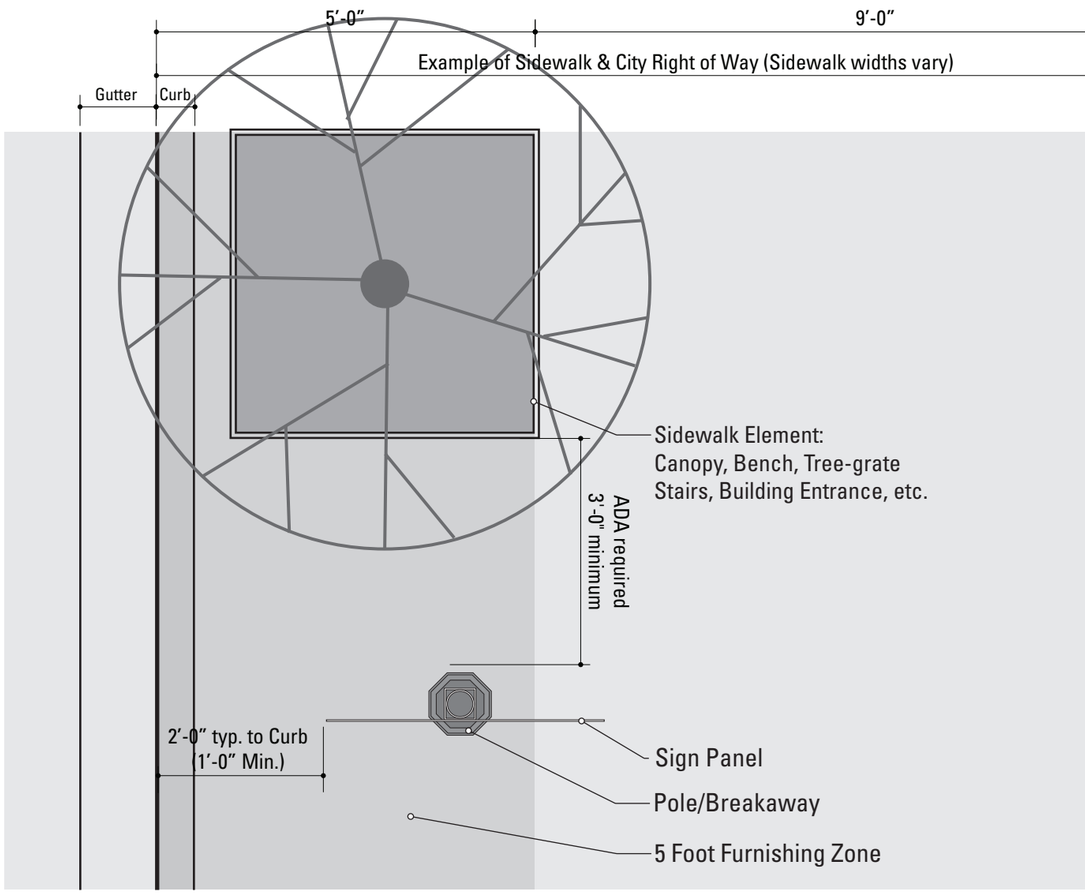

NOTE:
All locations shall be installed within the City ROW. If during the initial survey it is determined any part of the sign (pole or panel) extends outside of the City's Right of Way vertical plane and into private property, the installer must notify the city prior to fabrication/installation.

1 Reference View: Example - 5 foot Furnishing Zone / City Right of Way
SCALE: Not To Scale

Note: Top View of VDIR.1-3 shown as example.

Figure 7

Not to Scale

SIGN TYPE	DISTANCE FROM EDGE OF CURB TO EDGE OF SIGN PANEL	DISTANCE FROM CENTER OF POST TO EDGE OF CURB
VDIR.1-3	1′-0″	2′-1 1/2″
VDIR.1-3	1′-6″	2′-7 1/2″
VDIR.1-3	2′-0″	3′-1 1/2″
VDIR.4-6	1′-0″	2′-1 1/2″
VDIR.4-6	1′-6″	2′-7 1/2″
VDIR.4-6	2′-0″	3′-1 1/2″
PARK.1	1′-0″	2′-6″
PARK.1	1′-6″	3′-0″
PARK.1	2′-0″	3′-6″
PDIR.2	1′-0″	1′-5″
PDIR.2	1′-6″	1′-11″
PDIR.2	2′-0″	2′-5″
KIOSK.1	1′-0″	1′-2 1/4″
KIOSK.1	1′-6″	1′-8 1/4″
KIOSK.1	2′-0″	2′-2 1/4″
KIOSK.2	1′-0″	±1′-8″
KIOSK.2	1′-6″	±2′-2″
KIOSK.2	2′-0″	±2′-8″

SPECIFICATIONS

FIGURE 7 - Lateral Clearance Guidelines

Within some of the Downtown areas of Bentonville, urban conditions and narrow sidewalks may cause deviation from the standards articulated in the previous figures. Conditions may include less lateral clearance for the 2'-0" or 5'-0" preferred distance from edge of sign panel to curb, or placement at 2'-0" or 5'-0" would create an obstacle (i.e. post positioned in middle of the side walk) or create situations of non-compliance to ADA clearances.

In these cases guidelines must be consistent with MUTCD Section 2A.19 options for urban areas.

Suggested recommendations for relocation of signs if placement is in conflict with guidelines.

OPTION A: Position the sign at a minimum of 2'-0" or 5'-0" (face of curb to edge of sign panel) as required.

OPTION B: If the sign can be moved, without disrupting routing or sequencing, then it should be repositioned to achieve the 2'-0" or 5'-0" min.

If 2'-0" is not physically possible, then the following options should be allowed:

OPTION C: The sign set back should be position at 1'-6". If that is not possible then...

OPTION D: Utilize a minimum 1'- 0", in accordance with MUTCD, only as a final option.

NOTES

ENVIRONMENTS & EXPERIENCES
merje
120 North Church Street
Suite 208
West Chester, PA 19380
T 484.266.0648
www.merjedesign.com

CLIENT / PROJECT
CITY OF BENTONVILLE
Bentonville, Arkansas
Wayfinding and Signage System

PROJECT NO. Y41.08062.000

SUBCONSULTANT

SHEET TITLE
Sign Placement Guidelines

DATE 09/29/2014
DRAWN BY: PR
REVISIONS

These drawings are meant for DESIGN INTENT ONLY and are not for construction. Contractor shall verify and be responsible for all dimensions and conditions of the job. Contractor shall be familiar with the site and conditions it presents. This office must be notified of any variations from the dimensions and conditions shown on this drawing. Shop drawings and details must be submitted to this office for approval prior to proceeding with fabrication. All copy shall be proofread by client and legal requirements checked by legal department.

SHEET NO. **C.5**

KEY:

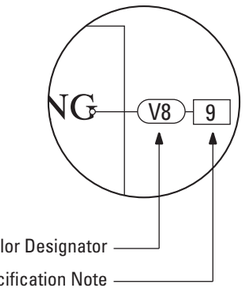

The Color Designator Chart is found in the Graphic Standards section.

The Specification Notation is found on the same page as the drawings.

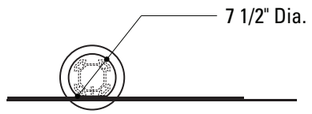

3 Plan View: VDIR.1
SCALE: 1/2" = 1'-0"

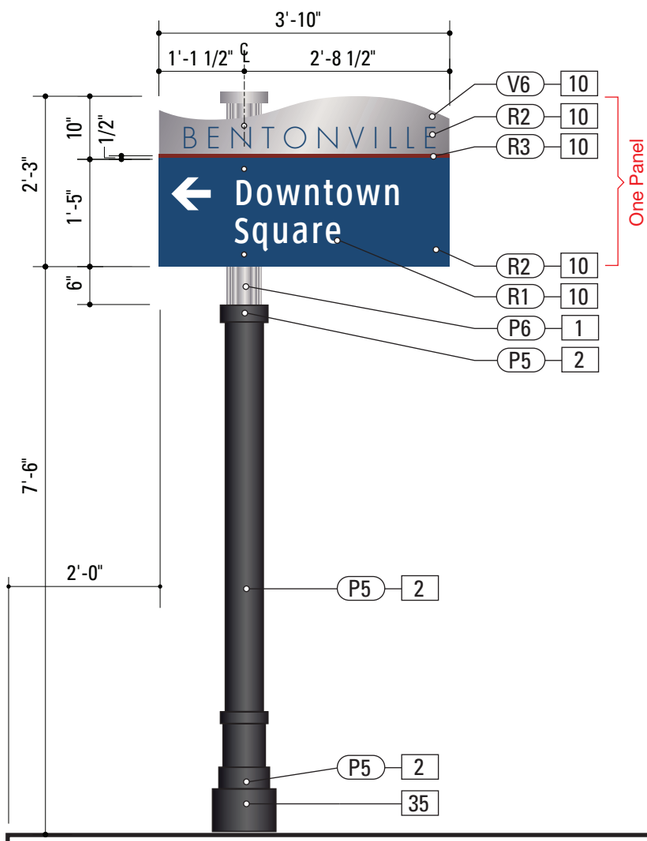

1 Front View: VDIR.1
SCALE: 1/2" = 1'-0"

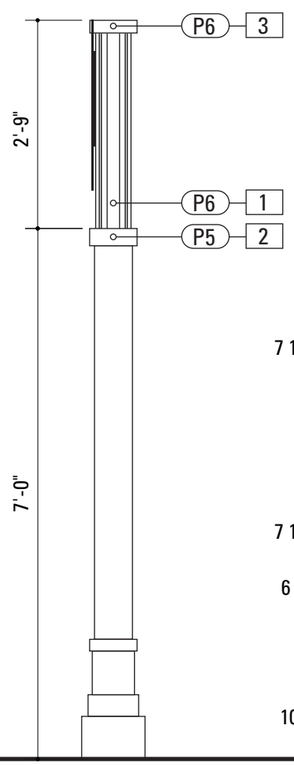

2 Side View: VDIR.1
SCALE: 1/2" = 1'-0"

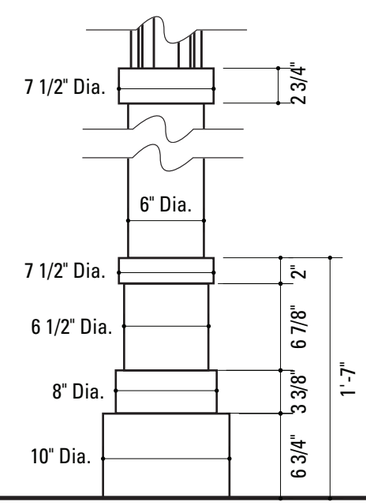

4 Detail View: VDIR.1
SCALE: 1" = 1'-0"

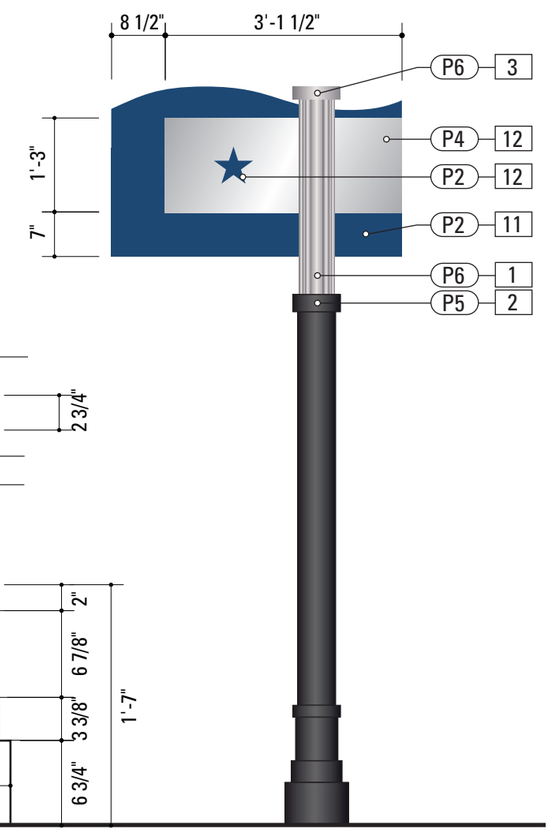

5 Back View: VDIR.1
SCALE: 1/2" = 1'-0"

SPECIFICATIONS **SIGN TYPE:** VDIR.1 **FUNCTION:** Vehicular Directional

1. SITELINK DECORATIVE POST
PRODUCT: Holophane® SiteLink Medium Duty (T2) SL6 Post - 4 track, 5.75" x 5.75", or approved equal.
FABRICATION PROCESS: Extruded
EDGES: Smooth
COLOR: Custom, as noted
SURFACE PROCESS: Powder-coat all exposed surfaces.
FASTENER: Weld as required to structural base plate.

2. CUSTOM POST COVER & BASE
POLE: 6" diameter pole
MATERIAL: 1/8" Fabricated Aluminum
FABRICATION PROCESS: Extruded / Fabricated
EDGES: Smooth
COLOR: Custom, as noted
SURFACE PROCESS: Paint all exposed surfaces with Matthews Acrylic Polyurethane, with clear coat satin finish.
FASTENER: Mechanically fastened to post.

3. SITELINK POST CAP
MATERIAL: 1/8" thk Fabricated Aluminum
FABRICATION PROCESS: Extruded / Fabricated
EDGES: Smooth
COLOR: custom, as noted
SURFACE PROCESS: Powder-coat all exposed surfaces.
FASTENER: Mechanically fastened to post.

10. SIGN PANEL FRONT - REFLECTIVE
MATERIAL: 1/4" thk Aluminum sheet
FABRICATION PROCESS: Router Cut
EDGES: Smooth
COLOR: custom, as noted
GRAPHIC BACKGROUND AND COPY PROCESS: 3M custom inks print direct to 3930 with 3M approved UV/ Graffiti Vinyl Over-laminate. (See Color Sheet for all color and material specifications)
FASTENER: Mechanically fastens to post with SiteLink Cam Lock.

11. SIGN PANEL BACK - PAINT
COLOR: custom, as noted
SURFACE PROCESS: Paint all exposed surfaces with Matthews Acrylic Polyurethane, with clear coat satin finish.

12. BACKER PANEL
MATERIAL: 1/4" thk Aluminum sheet
FABRICATION PROCESS: Router Cut
EDGES: Square, Smooth
COLOR: Custom, as noted
SURFACE PROCESS: Paint all exposed surfaces with Matthews Acrylic Polyurethane, with clear coat satin finish.
GRAPHICS: Screen print all exposed surfaces with Matthews Acrylic Polyurethane, with clear coat satin finish.
FASTENER: Mechanically fastens to post with SiteLink Cam Lock.

35. BREAKAWAY FOOTER
FOOTER: The Transpo® Pole-Safe break-away system, according to specifications per the FHWA and AHTD.

NOTES

1. Fabricator to verify the mounting conditions and provide a detail drawing for each mounting situation, prior to fabrication. Fabricator must obtain approval from the Designer or Client for placement prior to fabrication.
2. Welds: All welds shall be ground smooth, paint all seams.
3. Hardware: All exposed hardware shall be tamper proof fasteners.
4. All exposed edges painted to match adjacent face.

ENVIRONMENTS & EXPERIENCES
merje
120 North Church Street
Suite 208
West Chester, PA 19380
T 484.266.0648
www.merjedesign.com

CLIENT / PROJECT
CITY OF BENTONVILLE
Bentonville, Arkansas
Wayfinding and Signage System

PROJECT NO. Y41.08062.000

SUBCONSULTANT

DATE 09/29/2014

DRAWN BY: PR

REVISIONS

SHEET TITLE
Sign Type VDIR.1
Vehicular Directional

SHEET NO.
D.1

These drawings are meant for DESIGN INTENT ONLY and are not for construction. Contractor shall verify and be responsible for all dimensions and conditions of the job. Contractor shall be familiar with the site and conditions it presents. This office must be notified of any variations from the dimensions and conditions shown on this drawing. Shop drawings and details must be submitted to this office for approval prior to proceeding with fabrication. All copy shall be proofread by client and legal requirements checked by legal department.

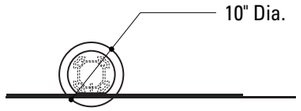

3 Plan View: VDIR.2
SCALE: 1/2" = 1'-0"

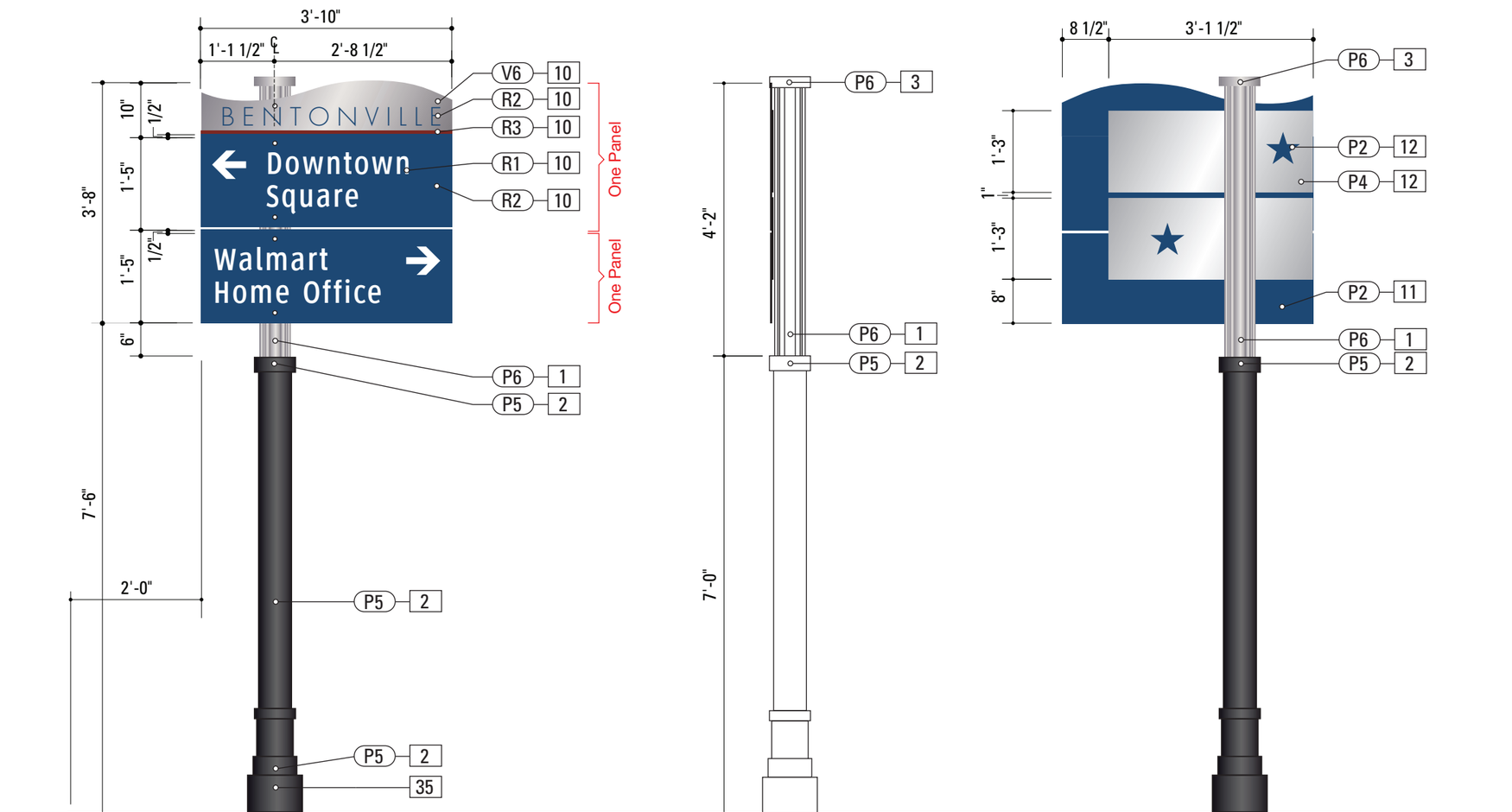

1 Front View: VDIR.2
SCALE: 1/2" = 1'-0"

2 Side View: VDIR.2
SCALE: 1/2" = 1'-0"

4 Back View: VDIR.2
SCALE: 1/2" = 1'-0"

SPECIFICATIONS **SIGN TYPE:** VDIR.2 **FUNCTION:** Vehicular Directional

1. SITELINK DECORATIVE POST
PRODUCT: Holophane® SiteLink Medium Duty (T2) SL6 Post - 4 track, 5.75" x 5.75", or approved equal.
FABRICATION PROCESS: Extruded
EDGES: Smooth
COLOR: Custom, as noted
SURFACE PROCESS: Powder-coat all exposed surfaces.
FASTENER: Weld as required to structural base plate.

2. CUSTOM POST COVER & BASE
POLE: 6" diameter pole
MATERIAL: 1/8" Fabricated Aluminum
FABRICATION PROCESS: Extruded / Fabricated
EDGES: Smooth
COLOR: Custom, as noted
SURFACE PROCESS: Paint all exposed surfaces with Matthews Acrylic Polyurethane, with clear coat satin finish.
FASTENER: Mechanically fastened to post.

3. SITELINK POST CAP
MATERIAL: 1/8" thk Fabricated Aluminum
FABRICATION PROCESS: Extruded / Fabricated
EDGES: Smooth
COLOR: custom, as noted
SURFACE PROCESS: Powder-coat all exposed surfaces.
FASTENER: Mechanically fastened to post.

10. SIGN PANEL FRONT - REFLECTIVE
MATERIAL: 1/4" thk Aluminum sheet
FABRICATION PROCESS: Router Cut
EDGES: Smooth
COLOR: custom, as noted
GRAPHIC BACKGROUND AND COPY PROCESS: 3M custom inks print direct to 3930 with 3M approved UV/ Graffiti Vinyl Over-laminate. (See Color Sheet for all color and material specifications)
FASTENER: Mechanically fastens to post with SiteLink Cam Lock.

11. SIGN PANEL BACK - PAINT
COLOR: custom, as noted
SURFACE PROCESS: Paint all exposed surfaces with Matthews Acrylic Polyurethane, with clear coat satin finish.

12. BACKER PANEL
MATERIAL: 1/4" thk Aluminum sheet
FABRICATION PROCESS: Router Cut
EDGES: Square, Smooth
COLOR: Custom, as noted
SURFACE PROCESS: Paint all exposed surfaces with Matthews Acrylic Polyurethane, with clear coat satin finish.
GRAPHICS: Screen print all exposed surfaces with Matthews Acrylic Polyurethane, with clear coat satin finish.
FASTENER: Mechanically fastens to post with SiteLink Cam Lock.

35. BREAKAWAY FOOTER
FOOTER: The Transpo® Pole-Safe break-away system, according to specifications per the FHWA and AHTD.

NOTES

1. Fabricator to verify the mounting conditions and provide a detail drawing for each mounting situation, prior to fabrication. Fabricator must obtain approval from the Designer or Client for placement prior to fabrication.
2. Welds: All welds shall be ground smooth, paint all seams.
3. Hardware: All exposed hardware shall be tamper proof fasteners.
4. All exposed edges painted to match adjacent face.

ENVIRONMENTS & EXPERIENCES
merje
120 North Church Street
Suite 208
West Chester, PA 19380
T 484.266.0648
www.merjedesign.com

CLIENT / PROJECT
CITY OF BENTONVILLE
Bentonville, Arkansas
Wayfinding and Signage System

PROJECT NO. Y41.08062.000

SUBCONSULTANT

DATE 09/29/2014

DRAWN BY: PR

REVISIONS

SHEET TITLE
Sign Type VDIR.2
Vehicular Directional

SHEET NO. **D.2**

These drawings are meant for DESIGN INTENT ONLY and are not for construction. Contractor shall verify and be responsible for all dimensions and conditions of the job. Contractor shall be familiar with the site and conditions it presents. This office must be notified of any variations from the dimensions and conditions shown on this drawing. Shop drawings and details must be submitted to this office for approval prior to proceeding with fabrication. All copy shall be proofread by client and legal requirements checked by legal department.

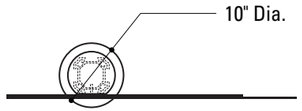

3 Plan View: VDIR.3
SCALE: 1/2" = 1'-0"

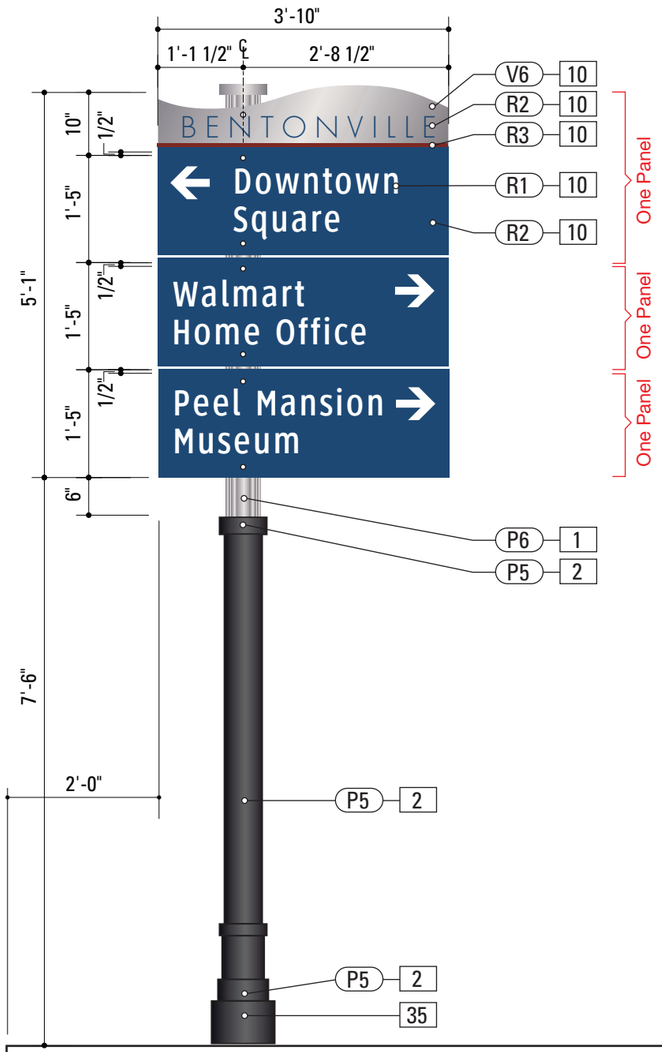

1 Front View: VDIR.3
SCALE: 1/2" = 1'-0"

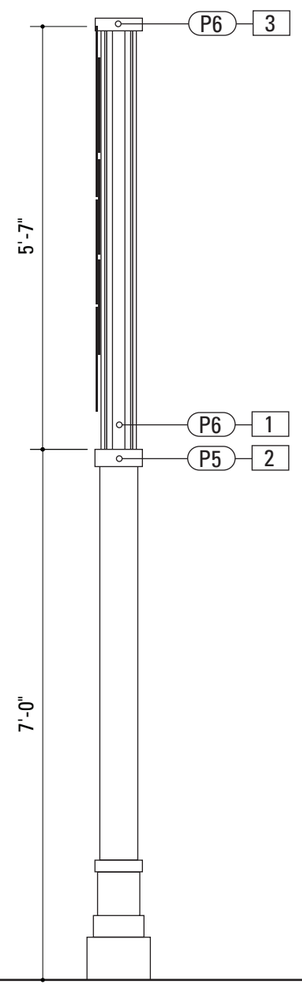

2 Side View: VDIR.3
SCALE: 1/2" = 1'-0"

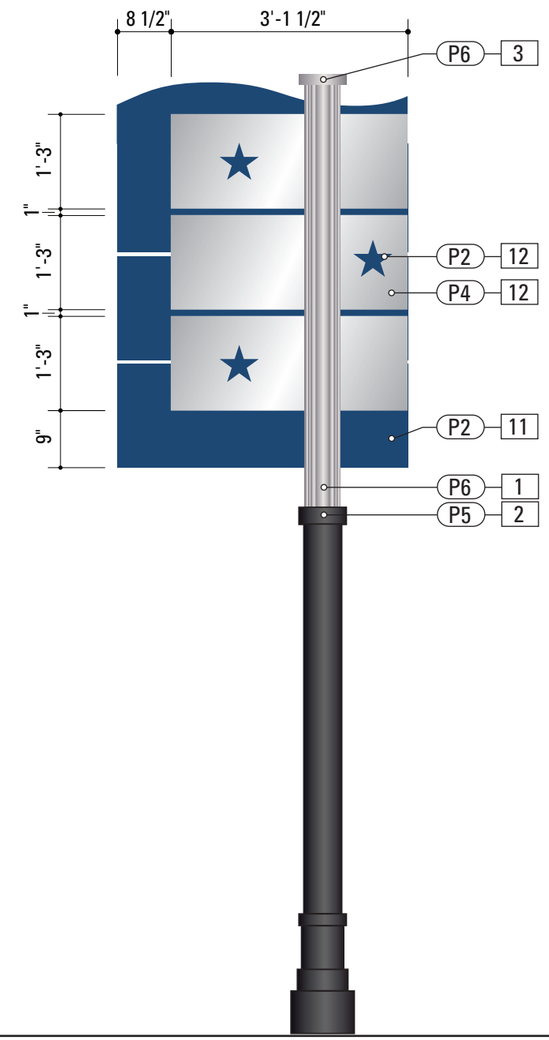

4 Back View: VDIR.3
SCALE: 1/2" = 1'-0"

SPECIFICATIONS **SIGN TYPE:** VDIR.3 **FUNCTION:** Vehicular Directional

1. SITELINK DECORATIVE POST
PRODUCT: Holophane® SiteLink Medium Duty (T2) SL6 Post - 4 track, 5.75" x 5.75", or approved equal.
FABRICATION PROCESS: Extruded
EDGES: Smooth
COLOR: Custom, as noted
SURFACE PROCESS: Powder-coat all exposed surfaces.
FASTENER: Weld as required to structural base plate.

2. CUSTOM POST COVER & BASE
POLE: 6" diameter pole
MATERIAL: 1/8" Fabricated Aluminum
FABRICATION PROCESS: Extruded / Fabricated
EDGES: Smooth
COLOR: Custom, as noted
SURFACE PROCESS: Paint all exposed surfaces with Matthews Acrylic Polyurethane, with clear coat satin finish.
FASTENER: Mechanically fastened to post.

3. SITELINK POST CAP
MATERIAL: 1/8" thk Fabricated Aluminum
FABRICATION PROCESS: Extruded / Fabricated
EDGES: Smooth
COLOR: custom, as noted
SURFACE PROCESS: Powder-coat all exposed surfaces.
FASTENER: Mechanically fastened to post.

10. SIGN PANEL FRONT - REFLECTIVE
MATERIAL: 1/4" thk Aluminum sheet
FABRICATION PROCESS: Router Cut
EDGES: Smooth
COLOR: custom, as noted
GRAPHIC BACKGROUND AND COPY PROCESS: 3M custom inks print direct to 3930 with 3M approved UV/ Graffiti Vinyl Over-laminate. (See Color Sheet for all color and material specifications)
FASTENER: Mechanically fastens to post with SiteLink Cam Lock.

11. SIGN PANEL BACK - PAINT
COLOR: custom, as noted
SURFACE PROCESS: Paint all exposed surfaces with Matthews Acrylic Polyurethane, with clear coat satin finish.

12. BACKER PANEL
MATERIAL: 1/4" thk Aluminum sheet
FABRICATION PROCESS: Router Cut
EDGES: Square, Smooth
COLOR: Custom, as noted
SURFACE PROCESS: Paint all exposed surfaces with Matthews Acrylic Polyurethane, with clear coat satin finish.
GRAPHICS: Screen print all exposed surfaces with Matthews Acrylic Polyurethane, with clear coat satin finish.
FASTENER: Mechanically fastens to post with SiteLink Cam Lock.

35. BREAKAWAY FOOTER
FOOTER: The Transpo® Pole-Safe break-away system, according to specifications per the FHWA and AHTD.

NOTES

1. Fabricator to verify the mounting conditions and provide a detail drawing for each mounting situation, prior to fabrication. Fabricator must obtain approval from the Designer or Client for placement prior to fabrication.
2. Welds: All welds shall be ground smooth, paint all seams.
3. Hardware: All exposed hardware shall be tamper proof fasteners.
4. All exposed edges painted to match adjacent face.

ENVIRONMENTS & EXPERIENCES
merje
120 North Church Street
Suite 208
West Chester, PA 19380
T 484.266.0648
www.merjedesign.com

CLIENT / PROJECT
CITY OF BENTONVILLE
Bentonville, Arkansas
Wayfinding and Signage System

PROJECT NO. Y41.08062.000

SUBCONSULTANT

DATE 09/29/2014

DRAWN BY: PR

REVISIONS

SHEET TITLE
Sign Type VDIR.3
Vehicular Directional

SHEET NO.
D.3

These drawings are meant for DESIGN INTENT ONLY and are not for construction. Contractor shall verify and be responsible for all dimensions and conditions of the job. Contractor shall be familiar with the site and conditions it presents. This office must be notified of any variations from the dimensions and conditions shown on this drawing. Shop drawings and details must be submitted to this office for approval prior to proceeding with fabrication. All copy shall be proofread by client and legal requirements checked by legal department.

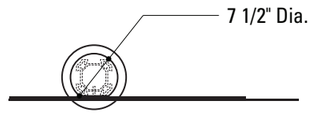

3 Plan View: VDIR.3ALT
SCALE: 1/2" = 1'-0"

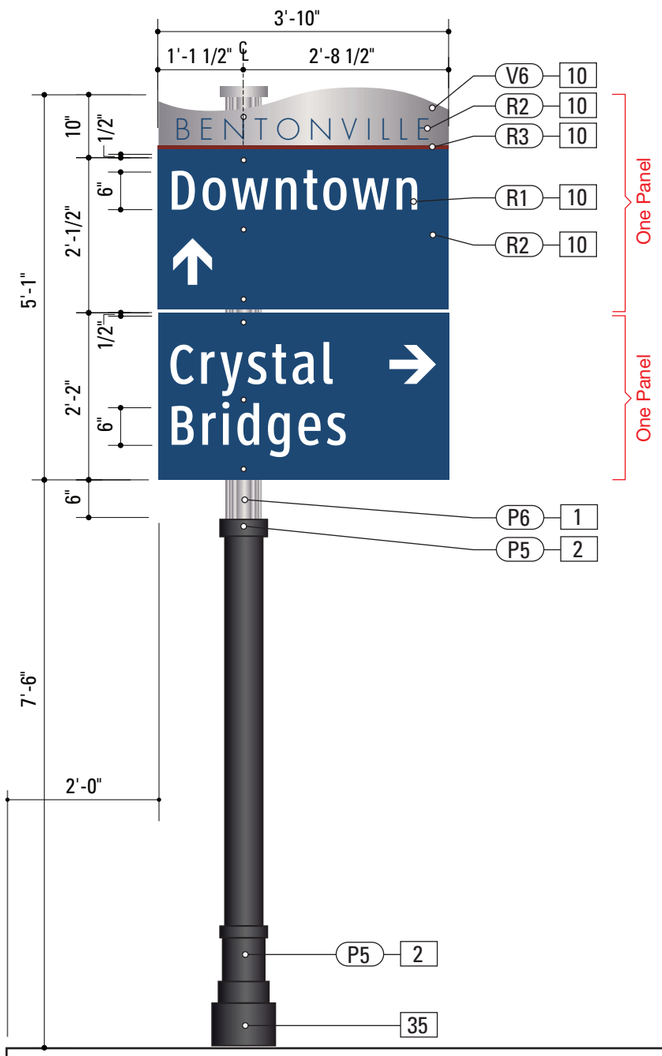

1 Front View: VDIR.3ALT
SCALE: 1/2" = 1'-0"

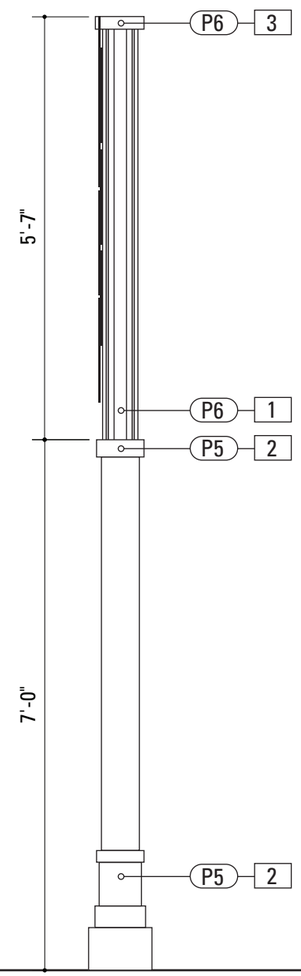

2 Side View: VDIR.3ALT
SCALE: 1/2" = 1'-0"

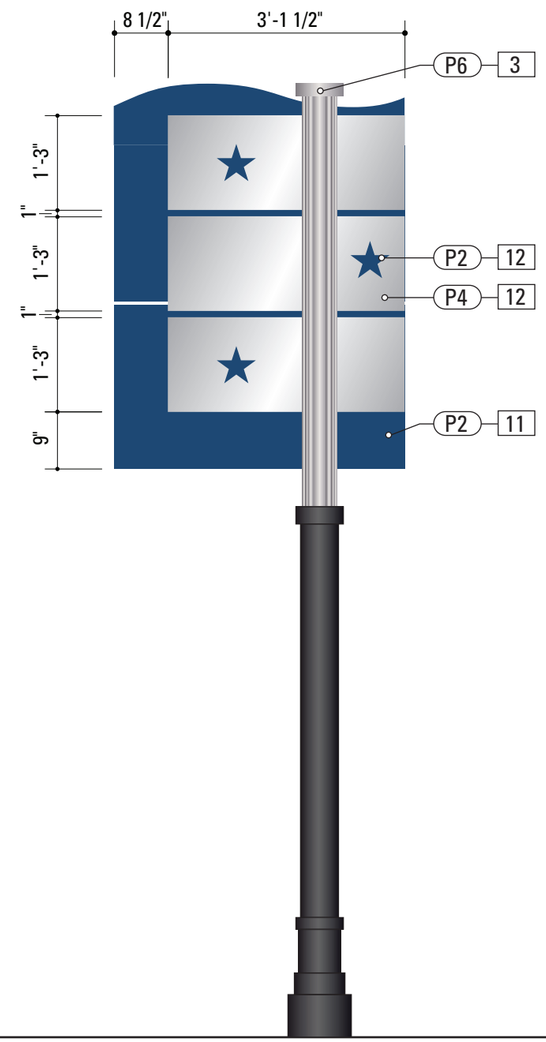

4 Back View: VDIR.3ALT
SCALE: 1/2" = 1'-0"

SPECIFICATIONS **SIGN TYPE:** VDIR.3ALT **FUNCTION:** Vehicular Directional

NOTE: This sign is ONLY utilized where larger message copy (6 inches) is necessary, and a single-post sign is required (rather than a double-post VDIR.5). Only 2 short messages can be applied.

1. **SITELINK DECORATIVE POST**
   PRODUCT: Holophane® SiteLink Medium Duty (T2) SL6 Post - 4 track, 5.75" x 5.75", or approved equal.
   FABRICATION PROCESS: Extruded
   EDGES: Smooth
   COLOR: Custom, as noted
   SURFACE PROCESS: Powder-coat all exposed surfaces.
   FASTENER: Weld as required to structural base plate.

2. **CUSTOM POST COVER & BASE**
   POLE: 6" diameter pole
   MATERIAL: 1/8" Fabricated Aluminum
   FABRICATION PROCESS: Extruded / Fabricated
   EDGES: Smooth
   COLOR: Custom, as noted
   SURFACE PROCESS: Paint all exposed surfaces with Matthews Acrylic Polyurethane, with clear coat satin finish.
   FASTENER: Mechanically fastened to post.

3. **SITELINK POST CAP**
   MATERIAL: 1/8" thk Fabricated Aluminum
   FABRICATION PROCESS: Extruded / Fabricated
   EDGES: Smooth
   COLOR: custom, as noted
   SURFACE PROCESS: Powder-coat all exposed surfaces.
   FASTENER: Mechanically fastened to post.

10. **SIGN PANEL FRONT - REFLECTIVE**
    MATERIAL: 1/4" thk Aluminum sheet
    FABRICATION PROCESS: Router Cut
    EDGES: Smooth
    COLOR: custom, as noted
    GRAPHIC BACKGROUND AND COPY PROCESS: 3M custom inks print direct to 3930 with 3M approved UV/ Graffiti Vinyl Over-laminate. (See Color Sheet for all color and material specifications)
    FASTENER: Mechanically fastens to post with SiteLink Cam Lock.

11. **SIGN PANEL BACK - PAINT**
    COLOR: custom, as noted
    SURFACE PROCESS: Paint all exposed surfaces with Matthews Acrylic Polyurethane, with clear coat satin finish.

12. **BACKER PANEL**
    MATERIAL: 1/4" thk Aluminum sheet
    FABRICATION PROCESS: Router Cut
    EDGES: Square, Smooth
    COLOR: Custom, as noted
    SURFACE PROCESS: Paint all exposed surfaces with Matthews Acrylic Polyurethane, with clear coat satin finish.
    GRAPHICS: Screen print all exposed surfaces with Matthews Acrylic Polyurethane, with clear coat satin finish.
    FASTENER: Mechanically fastens to post with SiteLink Cam Lock.

35. **BREAKAWAY FOOTER**
    FOOTER: The Transpo® Pole-Safe break-away system, according to specifications per the FHWA and AHTD.

NOTES

1. Fabricator to verify the mounting conditions and provide a detail drawing for each mounting situation, prior to fabrication. Fabricator must obtain approval from the Designer or Client for placement prior to fabrication.
2. Welds: All welds shall be ground smooth, paint all seams.
3. Hardware: All exposed hardware shall be tamper proof fasteners.
4. All exposed edges painted to match adjacent face.

ENVIRONMENTS & EXPERIENCES
merje
120 North Church Street
Suite 208
West Chester, PA 19380
T 484.266.0648
www.merjedesign.com

CLIENT / PROJECT
CITY OF BENTONVILLE
Bentonville, Arkansas
Wayfinding and Signage System

PROJECT NO. Y41.08062.000

SUBCONSULTANT

DATE 09/29/2014

DRAWN BY: PR

REVISIONS

SHEET TITLE
Sign Type VDIR.3ALT
Vehicular Directional

SHEET NO.
D.4

These drawings are meant for DESIGN INTENT ONLY and are not for construction. Contractor shall verify and be responsible for all dimensions and conditions of the job. Contractor shall be familiar with the site and conditions it presents. This office must be notified of any variations from the dimensions and conditions shown on this drawing. Shop drawings and details must be submitted to this office for approval prior to proceeding with fabrication. All copy shall be proofread by client and legal requirements checked by legal department.

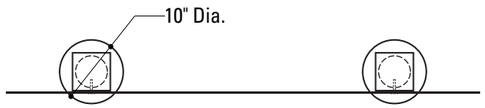

3 Plan View: VDIR.4
SCALE: 1/2" = 1'-0"

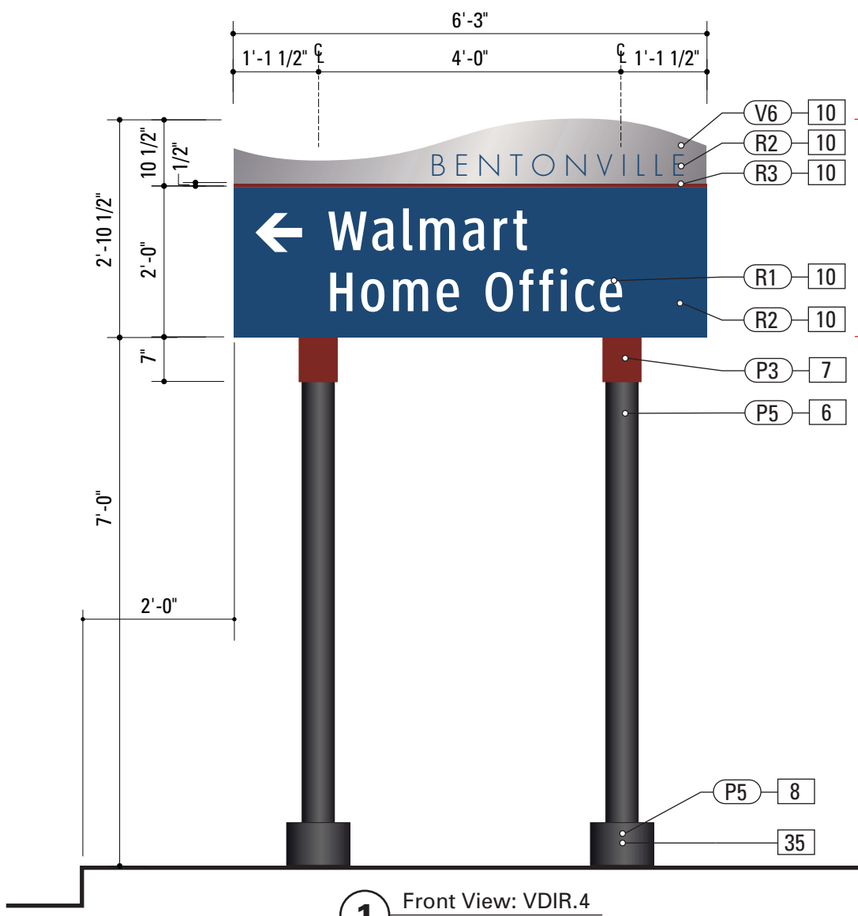

1 Front View: VDIR.4
SCALE: 1/2" = 1'-0"

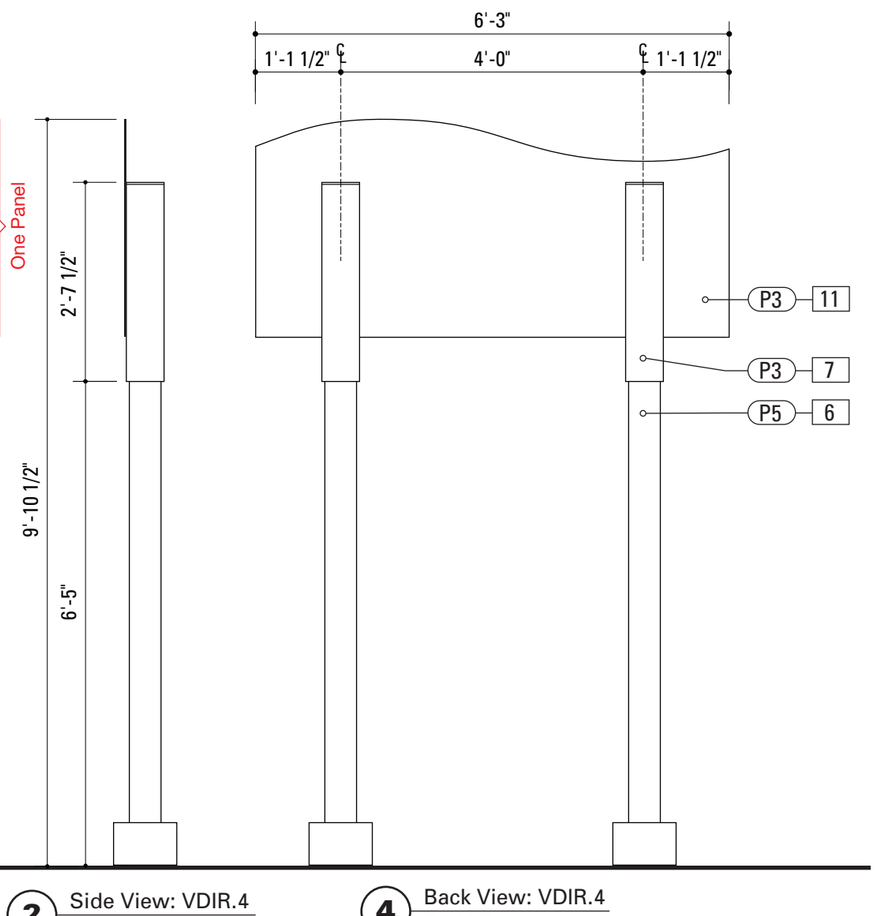

2 Side View: VDIR.4
SCALE: 1/2" = 1'-0"

4 Back View: VDIR.4
SCALE: 1/2" = 1'-0"

SPECIFICATIONS **SIGN TYPE:** VDIR.4 **FUNCTION:** Vehicular Directional

6. 5" DIAMETER POLE
MATERIAL: Aluminum SCH 40 Pipe 6061T6 - 5 (5.563" OD x .258" wall)
FABRICATION PROCESS: Extruded
EDGES: Smooth
COLOR: Custom, as noted
SURFACE PROCESS: Paint all exposed surfaces with Matthews Acrylic Polyurethane, with clear coat satin finish.
FOOTER: As per AHTD breakaway specs.

7. SLEEVE
MATERIAL: Aluminum Square Tube 6061T6 - 6" sq. x .1875" wall
FABRICATION PROCESS: Extruded
EDGES: Square
COLOR: custom, as noted
SURFACE PROCESS: Paint all exposed surfaces with Matthews Acrylic Polyurethane, with clear coat satin finish.
FASTENER: Mechanically fastened to pole. Teflon spacers (or similar) between Sleeve and Pole, to create tight bond.

8. CUSTOM CLAM SHELL BASE
SIZE: 7" height x 10" diameter
MATERIAL: 1/8" Fabricated Aluminum
FABRICATION PROCESS: Extruded / Fabricated
EDGES: Smooth
COLOR: Custom, as noted
SURFACE PROCESS: Paint all exposed surfaces with Matthews Acrylic Polyurethane, with clear coat satin finish.
FASTENER: Mechanically fastened to pole.

10. SIGN PANEL FRONT - REFLECTIVE
MATERIAL: 1/4" thk Aluminum sheet
FABRICATION PROCESS: Router Cut
EDGES: Smooth
COLOR: custom, as noted
GRAPHIC BACKGROUND AND COPY PROCESS: 3M custom inks print direct to 3930 with 3M approved UV/ Graffiti Vinyl Over-laminate. (See Color Sheet for all color and material specifications)
FASTENER: Mechanically fastens to post with SiteLink Cam Lock.

11. SIGN PANEL BACK - PAINT
COLOR: custom, as noted
SURFACE PROCESS: Paint all exposed surfaces with Matthews Acrylic Polyurethane, with clear coat satin finish.

35. BREAKAWAY FOOTER
FOOTER: The Transpo® Pole-Safe break-away system, according to specifications per the FHWA and AHTD.

NOTES

1. Fabricator to verify the mounting conditions and provide a detail drawing for each mounting situation, prior to fabrication. Fabricator must obtain approval from the Designer or Client for placement prior to fabrication.
2. Welds: All welds shall be ground smooth, paint all seams.
3. Hardware: All exposed hardware shall be tamper proof fasteners.
4. All exposed edges painted to match adjacent face.

ENVIRONMENTS & EXPERIENCES
merje
120 North Church Street
Suite 208
West Chester, PA 19380
T 484.266.0648
www.merjedesign.com

CLIENT / PROJECT
CITY OF BENTONVILLE
Bentonville, Arkansas
Wayfinding and Signage System

PROJECT NO. Y41.08062.000

SUBCONSULTANT

DATE 09/29/2014

DRAWN BY: PR

REVISIONS

SHEET TITLE
Sign Type VDIR.4
Vehicular Directional

SHEET NO.
D.5

These drawings are meant for DESIGN INTENT ONLY and are not for construction. Contractor shall verify and be responsible for all dimensions and conditions of the job. Contractor shall be familiar with the site and conditions it presents. This office must be notified of any variations from the dimensions and conditions shown on this drawing. Shop drawings and details must be submitted to this office for approval prior to proceeding with fabrication. All copy shall be proofread by client and legal requirements checked by legal department.

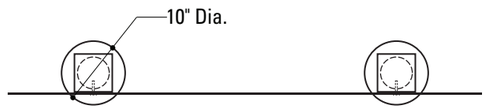

3 Plan View: VDIR.5
SCALE: 1/2" = 1'-0"

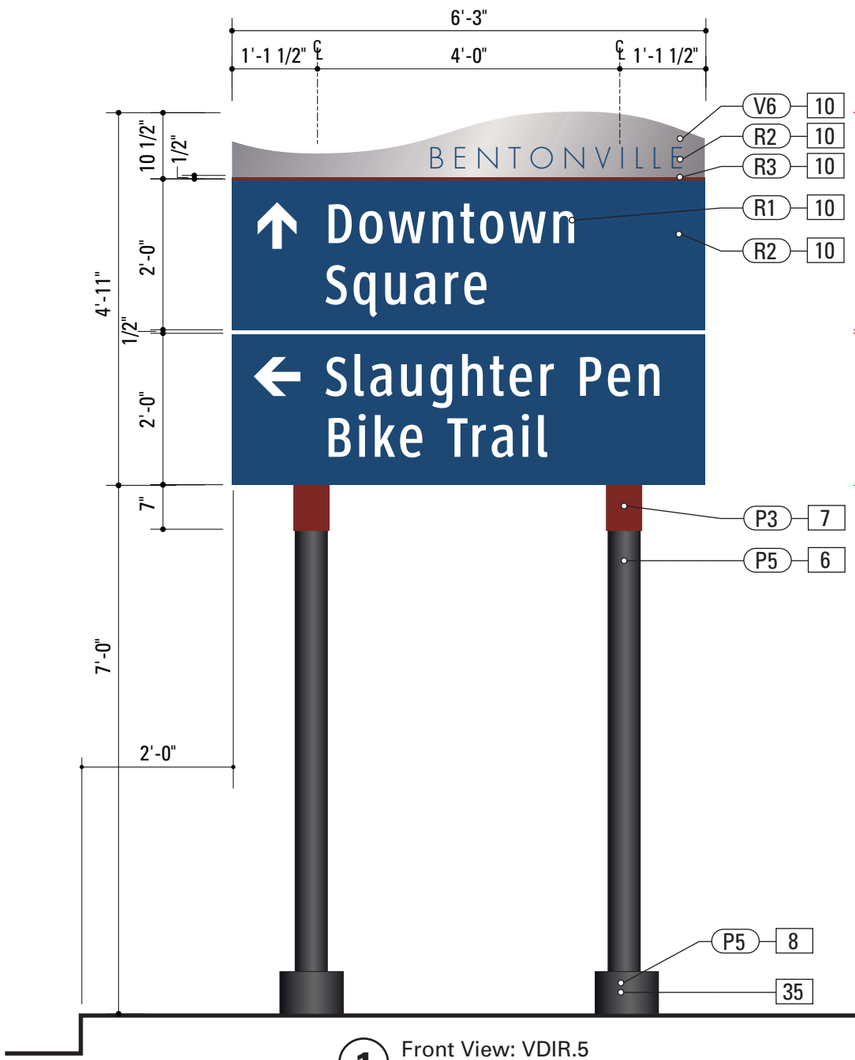

1 Front View: VDIR.5
SCALE: 1/2" = 1'-0"

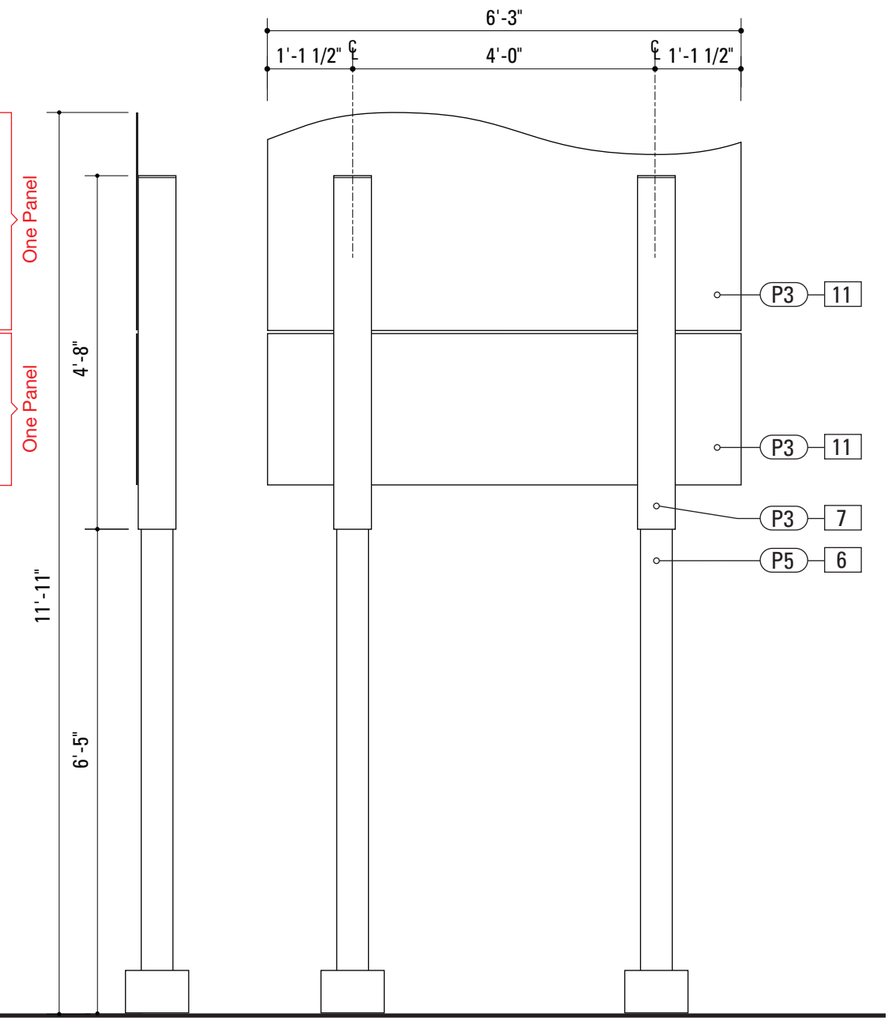

2 Side View: VDIR.5
SCALE: 1/2" = 1'-0"

4 Back View: VDIR.5
SCALE: 1/2" = 1'-0"

SPECIFICATIONS **SIGN TYPE:** VDIR.5 **FUNCTION:** Vehicular Directional

6. 5" DIAMETER POLE
MATERIAL: Aluminum SCH 40 Pipe 6061T6 - 5 (5.563" OD x .258" wall)
FABRICATION PROCESS: Extruded
EDGES: Smooth
COLOR: Custom, as noted
SURFACE PROCESS: Paint all exposed surfaces with Matthews Acrylic Polyurethane, with clear coat satin finish.
FOOTER: As per AHTD breakaway specs.

7. SLEEVE
MATERIAL: Aluminum Square Tube 6061T6 - 6" sq. x .1875" wall
FABRICATION PROCESS: Extruded
EDGES: Square
COLOR: custom, as noted
SURFACE PROCESS: Paint all exposed surfaces with Matthews Acrylic Polyurethane, with clear coat satin finish.
FASTENER: Mechanically fastened to pole. Teflon spacers (or similar) between Sleeve and Pole, to create tight bond.

8. CUSTOM CLAM SHELL BASE
SIZE: 7" height x 10" diameter
MATERIAL: 1/8" Fabricated Aluminum
FABRICATION PROCESS: Extruded / Fabricated
EDGES: Smooth
COLOR: Custom, as noted
SURFACE PROCESS: Paint all exposed surfaces with Matthews Acrylic Polyurethane, with clear coat satin finish.
FASTENER: Mechanically fastened to pole.

10. SIGN PANEL FRONT - REFLECTIVE
MATERIAL: 1/4" thk Aluminum sheet
FABRICATION PROCESS: Router Cut
EDGES: Smooth
COLOR: custom, as noted
GRAPHIC BACKGROUND AND COPY PROCESS: 3M custom inks print direct to 3930 with 3M approved UV/ Graffiti Vinyl Over-laminate. (See Color Sheet for all color and material specifications)
FASTENER: Mechanically fastens to post with SiteLink Cam Lock.

11. SIGN PANEL BACK - PAINT
COLOR: custom, as noted
SURFACE PROCESS: Paint all exposed surfaces with Matthews Acrylic Polyurethane, with clear coat satin finish.

35. BREAKAWAY FOOTER
FOOTER: The Transpo® Pole-Safe break-away system, according to specifications per the FHWA and AHTD.

NOTES

1. Fabricator to verify the mounting conditions and provide a detail drawing for each mounting situation, prior to fabrication. Fabricator must obtain approval from the Designer or Client for placement prior to fabrication.
2. Welds: All welds shall be ground smooth, paint all seams.
3. Hardware: All exposed hardware shall be tamper proof fasteners.
4. All exposed edges painted to match adjacent face.

ENVIRONMENTS & EXPERIENCES
merje
120 North Church Street
Suite 208
West Chester, PA 19380
T 484.266.0648
www.merjedesign.com

CLIENT / PROJECT
CITY OF BENTONVILLE
Bentonville, Arkansas
Wayfinding and Signage System

PROJECT NO. Y41.08062.000

SUBCONSULTANT

DATE 09/29/2014

DRAWN BY: PR

REVISIONS

SHEET TITLE
Sign Type VDIR.5
Vehicular Directional

SHEET NO. **D.6**

These drawings are meant for DESIGN INTENT ONLY and are not for construction. Contractor shall verify and be responsible for all dimensions and conditions of the job. Contractor shall be familiar with the site and conditions it presents. This office must be notified of any variations from the dimensions and conditions shown on this drawing. Shop drawings and details must be submitted to this office for approval prior to proceeding with fabrication. All copy shall be proofread by client and legal requirements checked by legal department.

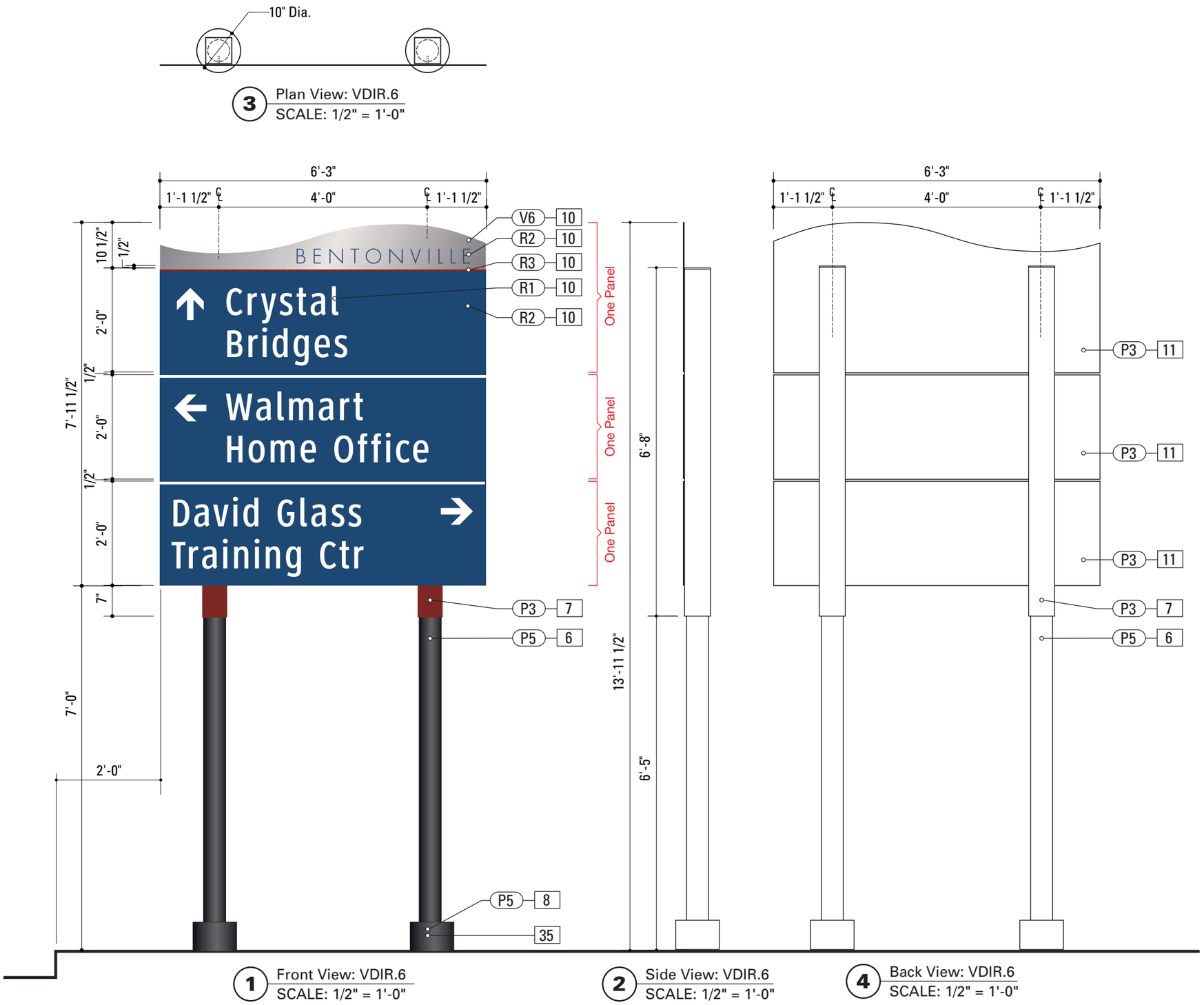

SPECIFICATIONS **SIGN TYPE:** VDIR.6 **FUNCTION:** Vehicular Directional

6. 5" DIAMETER POLE
MATERIAL: Aluminum SCH 40 Pipe 6061T6 - 5 (5.563" OD x .258" wall)
FABRICATION PROCESS: Extruded
EDGES: Smooth
COLOR: Custom, as noted
SURFACE PROCESS: Paint all exposed surfaces with Matthews Acrylic Polyurethane, with clear coat satin finish.
FOOTER: As per AHTD breakaway specs.

7. SLEEVE
MATERIAL: Aluminum Square Tube 6061T6 - 6" sq. x .1875" wall
FABRICATION PROCESS: Extruded
EDGES: Square
COLOR: custom, as noted
SURFACE PROCESS: Paint all exposed surfaces with Matthews Acrylic Polyurethane, with clear coat satin finish.
FASTENER: Mechanically fastened to pole. Teflon spacers (or similar) between Sleeve and Pole, to create tight bond.

8. CUSTOM CLAM SHELL BASE
SIZE: 7" height x 10" diameter
MATERIAL: 1/8" Fabricated Aluminum
FABRICATION PROCESS: Extruded / Fabricated
EDGES: Smooth
COLOR: Custom, as noted
SURFACE PROCESS: Paint all exposed surfaces with Matthews Acrylic Polyurethane, with clear coat satin finish.
FASTENER: Mechanically fastened to pole.

10. SIGN PANEL FRONT - REFLECTIVE
MATERIAL: 1/4" thk Aluminum sheet
FABRICATION PROCESS: Router Cut
EDGES: Smooth
COLOR: custom, as noted
GRAPHIC BACKGROUND AND COPY PROCESS: 3M custom inks print direct to 3930 with 3M approved UV/ Graffiti Vinyl Over-laminate. (See Color Sheet for all color and material specifications)
FASTENER: Mechanically fastens to post with SiteLink Cam Lock.

11. SIGN PANEL BACK - PAINT
COLOR: custom, as noted
SURFACE PROCESS: Paint all exposed surfaces with Matthews Acrylic Polyurethane, with clear coat satin finish.

35. BREAKAWAY FOOTER
FOOTER: The Transpo® Pole-Safe break-away system, according to specifications per the FHWA and AHTD.

NOTES

1. Fabricator to verify the mounting conditions and provide a detail drawing for each mounting situation, prior to fabrication. Fabricator must obtain approval from the Designer or Client for placement prior to fabrication.
2. Welds: All welds shall be ground smooth, paint all seams.
3. Hardware: All exposed hardware shall be tamper proof fasteners.
4. All exposed edges painted to match adjacent face.

ENVIRONMENTS & EXPERIENCES
merje
120 North Church Street
Suite 208
West Chester, PA 19380
T 484.266.0648
www.merjedesign.com

CLIENT / PROJECT
CITY OF BENTONVILLE
Bentonville, Arkansas
Wayfinding and Signage System

PROJECT NO. Y41.08062.000

SUBCONSULTANT

DATE 09/29/2014

DRAWN BY: PR

REVISIONS

SHEET TITLE
Sign Type VDIR.6
Vehicular Directional

SHEET NO.
D.7

These drawings are meant for DESIGN INTENT ONLY and are not for construction. Contractor shall verify and be responsible for all dimensions and conditions of the job. Contractor shall be familiar with the site and conditions it presents. This office must be notified of any variations from the dimensions and conditions shown on this drawing. Shop drawings and details must be submitted to this office for approval prior to proceeding with fabrication. All copy shall be proofread by client and legal requirements checked by legal department.

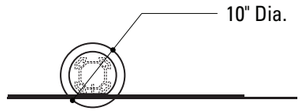

3 Plan View: TRAIL.1
SCALE: 1/2" = 1'-0"

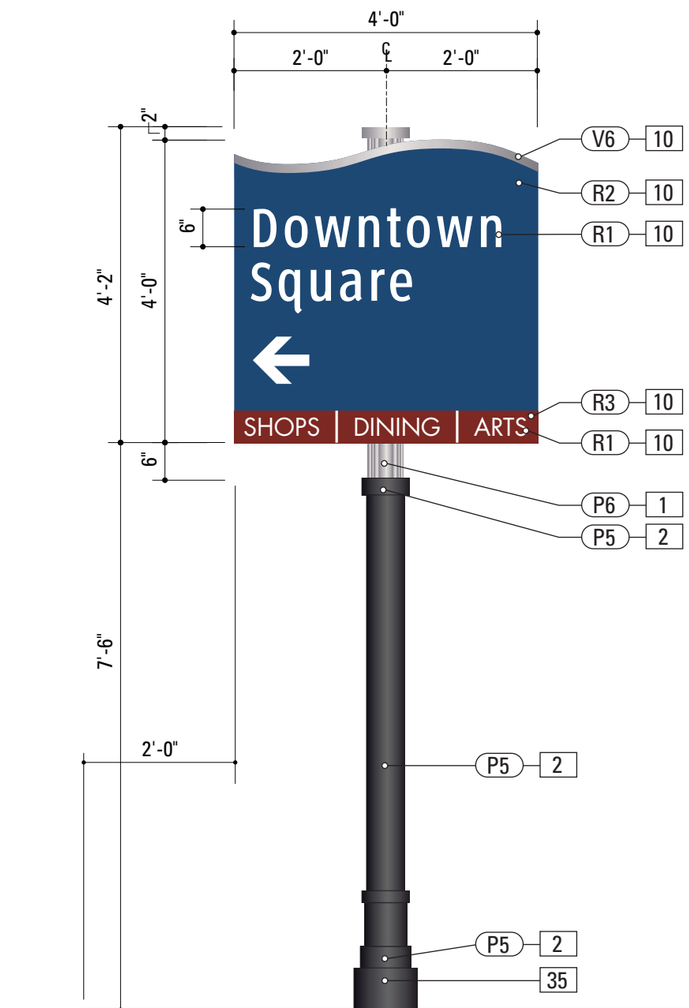

1 Front View: TRAIL.1
SCALE: 1/2" = 1'-0"

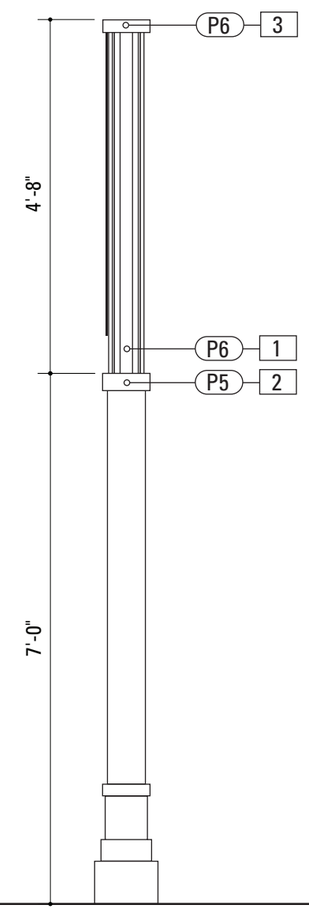

2 Side View: TRAIL.1
SCALE: 1/2" = 1'-0"

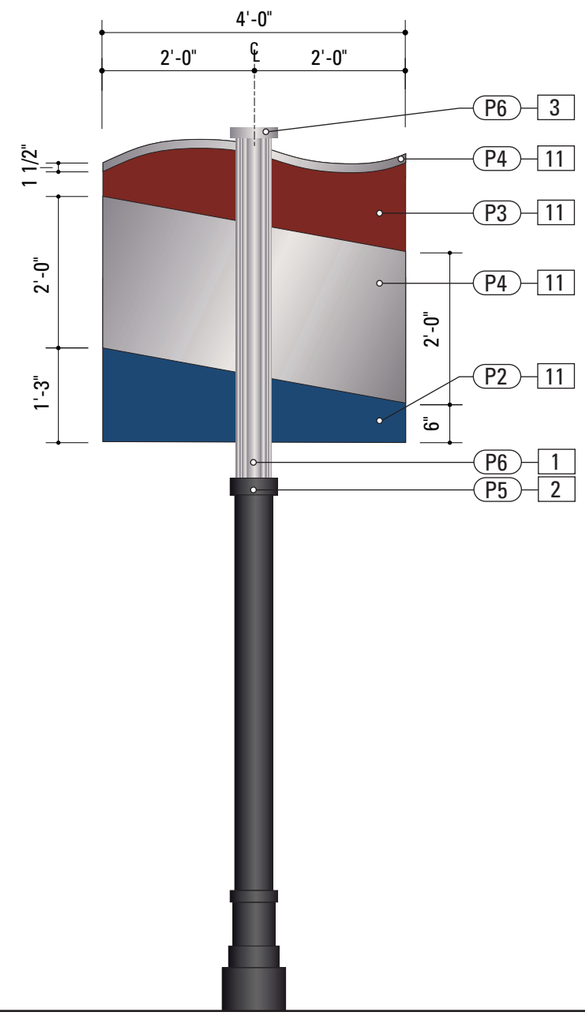

4 Back View: TRAIL.1
SCALE: 1/2" = 1'-0"

SPECIFICATIONS **SIGN TYPE:** TRAIL.1 **FUNCTION:** Downtown Trailblazer

1. **SITELINK DECORATIVE POST**
   PRODUCT: Holophane® SiteLink Medium Duty (T2) SL6 Post - 4 track, 5.75" x 5.75", or approved equal.
   FABRICATION PROCESS: Extruded
   EDGES: Smooth
   COLOR: Custom, as noted
   SURFACE PROCESS: Powder-coat all exposed surfaces.
   FASTENER: Weld as required to structural base plate.

2. **CUSTOM POST COVER & BASE**
   POLE: 6" diameter pole
   MATERIAL: 1/8" Fabricated Aluminum
   FABRICATION PROCESS: Extruded / Fabricated
   EDGES: Smooth
   COLOR: Custom, as noted
   SURFACE PROCESS: Paint all exposed surfaces with Matthews Acrylic Polyurethane, with clear coat satin finish.
   FASTENER: Mechanically fastened to post.

3. **SITELINK POST CAP**
   MATERIAL: 1/8" thk Fabricated Aluminum
   FABRICATION PROCESS: Extruded / Fabricated
   EDGES: Smooth
   COLOR: custom, as noted
   SURFACE PROCESS: Powder-coat all exposed surfaces.
   FASTENER: Mechanically fastened to post.

10. **SIGN PANEL FRONT - REFLECTIVE**
    MATERIAL: 1/4" thk Aluminum sheet
    FABRICATION PROCESS: Router Cut
    EDGES: Smooth
    COLOR: custom, as noted
    GRAPHIC BACKGROUND AND COPY PROCESS: 3M custom inks print direct to 3930 with 3M approved UV/ Graffiti Vinyl Over-laminate. (See Color Sheet for all color and material specifications)
    FASTENER: Mechanically fastens to post with SiteLink Cam Lock.

11. **SIGN PANEL BACK - PAINT**
    COLOR: custom, as noted
    SURFACE PROCESS: Paint all exposed surfaces with Matthews Acrylic Polyurethane, with clear coat satin finish.

35. **BREAKAWAY FOOTER**
    FOOTER: The Transpo® Pole-Safe break-away system, according to specifications per the FHWA and AHTD.

NOTES

1. Fabricator to verify the mounting conditions and provide a detail drawing for each mounting situation, prior to fabrication. Fabricator must obtain approval from the Designer or Client for placement prior to fabrication.
2. Welds: All welds shall be ground smooth, paint all seams.
3. Hardware: All exposed hardware shall be tamper proof fasteners.
4. All exposed edges painted to match adjacent face.

ENVIRONMENTS & EXPERIENCES
merje
120 North Church Street
Suite 208
West Chester, PA 19380
T 484.266.0648
www.merjedesign.com

CLIENT / PROJECT
CITY OF BENTONVILLE
Bentonville, Arkansas
Wayfinding and Signage System

PROJECT NO. Y41.08062.000

SUBCONSULTANT

DATE 09/29/2014

DRAWN BY: PR

REVISIONS

SHEET TITLE
Sign Type TRAIL.1
Downtown Trailblazer

SHEET NO.
D.8

These drawings are meant for DESIGN INTENT ONLY and are not for construction. Contractor shall verify and be responsible for all dimensions and conditions of the job. Contractor shall be familiar with the site and conditions it presents. This office must be notified of any variations from the dimensions and conditions shown on this drawing. Shop drawings and details must be submitted to this office for approval prior to proceeding with fabrication. All copy shall be proofread by client and legal requirements checked by legal department.

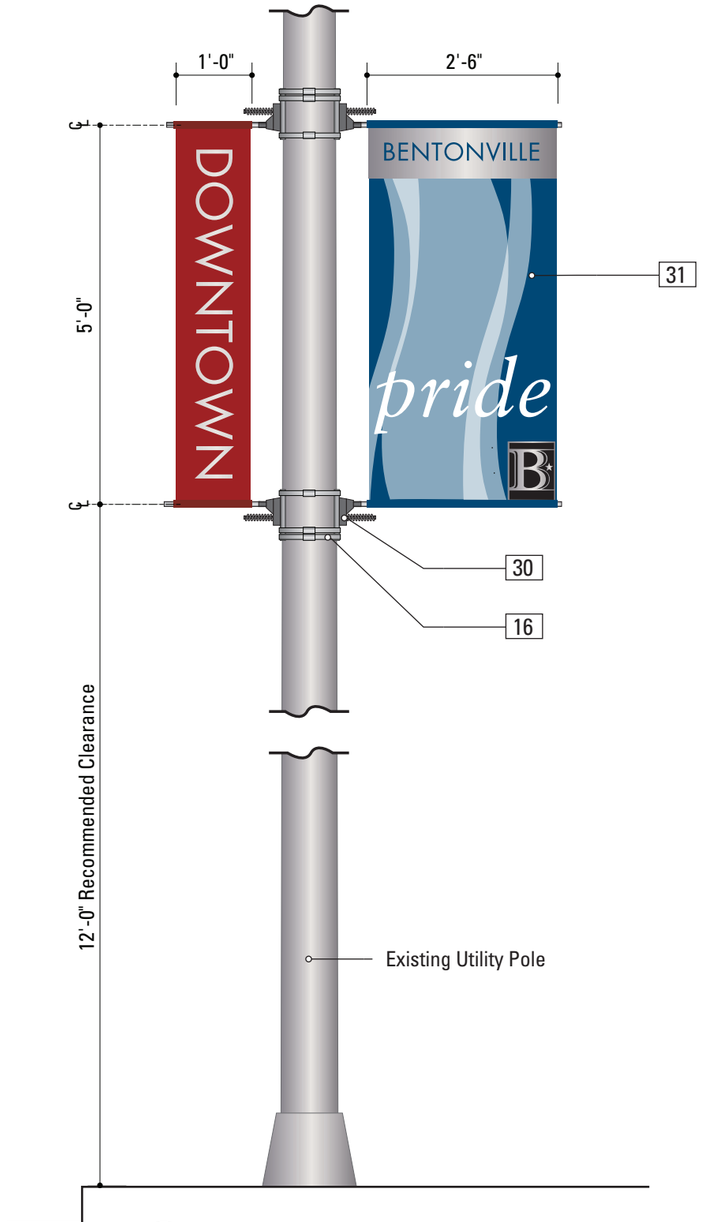

1 Front Elevation: BANNER.1
SCALE: 1/2" = 1'-0"

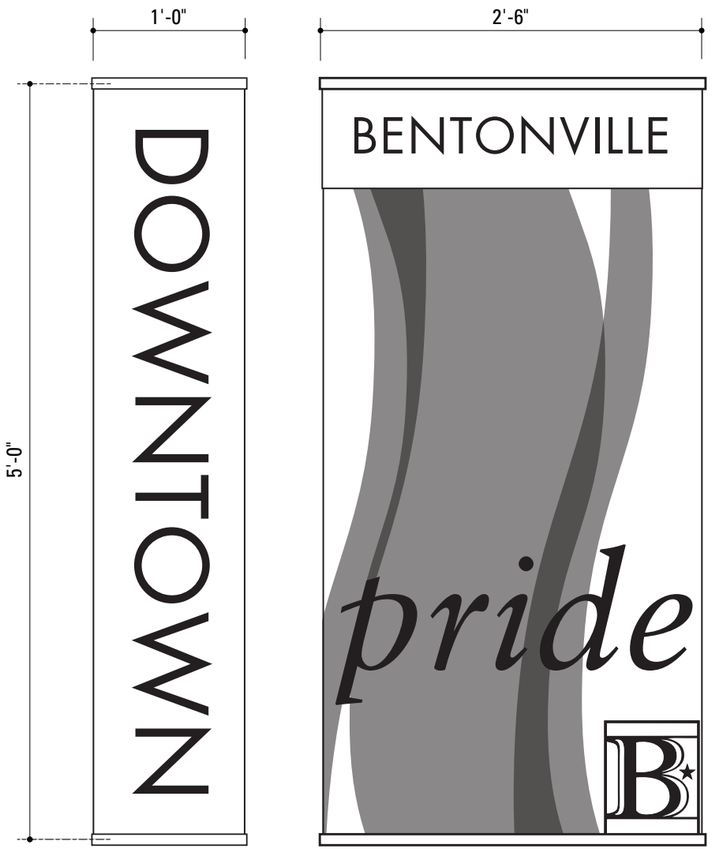

2 Detail: Banner Example
SCALE: 1/2" = 1'-0"

Banners are for example only and do NOT represent any specific design or application.

SPECIFICATIONS **SIGN TYPE:** BANNER.1 **FUNCTION:** City Banners

16. POLE STRAP ATTACHMENT
PRODUCT: Band-It Band, or approved equal.
MATERIAL: Type 201 SS
SIZE: 3/4 inch
FINISH: Stainless steel
FASTENER: Ultra-Lok® Free End clamps
NOTE: Sign Contractor to coordinate the removal or movement of interfering existing signs on poles, with the city.

30. BANNER BRACKET
PRODUCT: Banner Saver™ Pro 2000 bracket (spring loaded wind release brackets).
MATERIAL: Two-piece cast aluminum base with patented absorbtion spring. 3/4" removable fiberglass banner arm with tempered aluminum sleeve.
POLE STRAP ATTACHMENT: Band-It Band 201SS pole straps, with Ultra-Lok® Free End clamps, or approved equal.

31. VINYL BANNER
MATERIAL: 18 oz. opaque white blockout vinyl
PRINTED GRAPHICS: All graphics must be printed at 720 DPI maximum, using UV resistant inks.
CLEAR COAT: Formulated UV clear coat allowing for flexibility, and scratch resistance, or 3M UV/Graffiti vinyl over-laminate.
WARRANTY: Complete vinyl banner for 3 years.
CONSTRUCTION: 2 inch pole pockets on top and bottom, secured with double-lock stitching and back-stitching in areas of stress. Brass-spurred grommets are applied to the 2 inside corners locking the hem and providing security at stress points.
ATTACHMENT: Slide banner pole pockets onto bracket fiberglass rods. Attach flexible plastic tie, or cable, to brass grommet and to Banner Saver™ Pro 2000 bracket (spring loaded wind release brackets) top and bottom.

NOTES
1. Fabricator to verify the mounting conditions and provide a detail drawing for each mounting situation, prior to fabrication. Fabricator must obtain approval from the Designer or Client for placement prior to fabrication.
2. Welds: All welds shall be ground smooth, paint all seams.
3. Hardware: All exposed hardware shall be tamper proof fasteners.
4. All exposed edges painted to match adjacent face.

ENVIRONMENTS & EXPERIENCES
merje
120 North Church Street
Suite 208
West Chester, PA 19380
T 484.266.0648
www.merjedesign.com

CLIENT / PROJECT
CITY OF BENTONVILLE
Bentonville, Arkansas
Wayfinding and Signage System

PROJECT NO. Y41.08062.000

SUBCONSULTANT

DATE 09/29/2014

DRAWN BY: PR

REVISIONS

SHEET TITLE
Sign Type BANNER.1
City Banners

SHEET NO.
D.9

These drawings are meant for DESIGN INTENT ONLY and are not for construction. Contractor shall verify and be responsible for all dimensions and conditions of the job. Contractor shall be familiar with the site and conditions it presents. This office must be notified of any variations from the dimensions and conditions shown on this drawing. Shop drawings and details must be submitted to this office for approval prior to proceeding with fabrication. All copy shall be proofread by client and legal requirements checked by legal department.

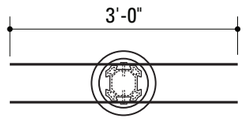

3 Plan View: PARK.1
SCALE: 1/2" = 1'-0"

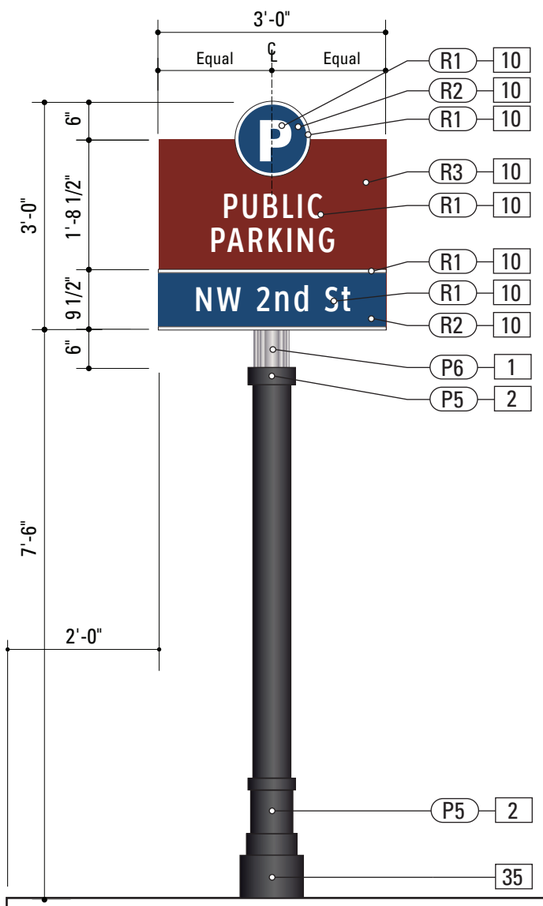

1 Front View: PARK.1
SCALE: 1/2" = 1'-0"

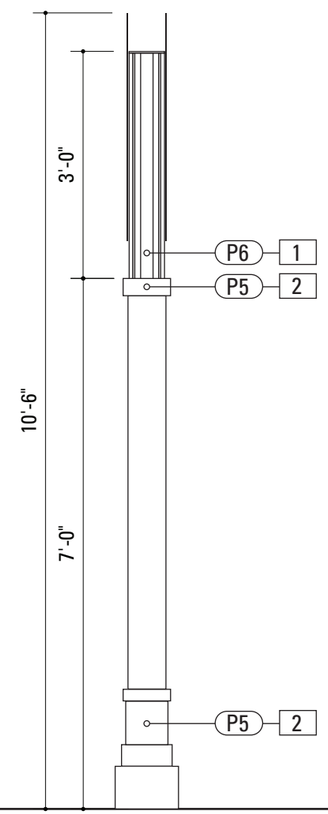

2 Side View: PARK.1
SCALE: 1/2" = 1'-0"

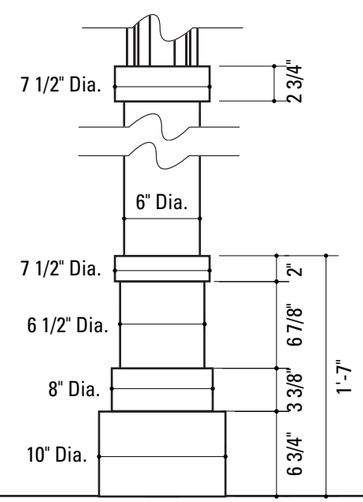

4 Detail View: PARK.1
SCALE: 1" = 1'-0"

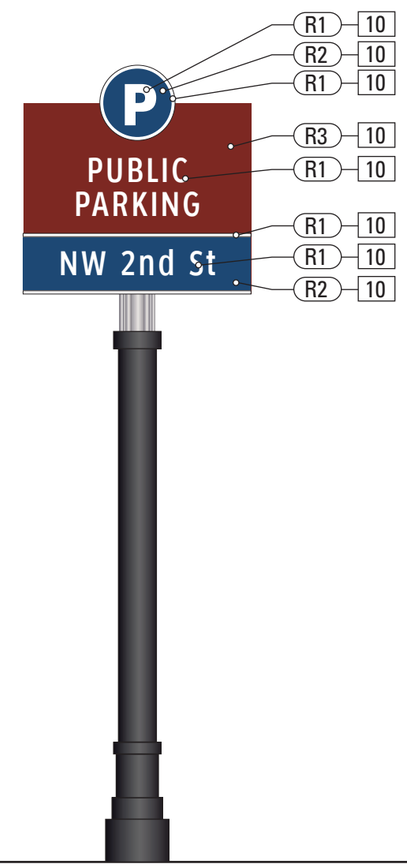

5 Back View: PARK.1
SCALE: 1/2" = 1'-0"

SPECIFICATIONS **SIGN TYPE:** PARK.1 **FUNCTION:** Parking Lot ID

1. **SITELINK DECORATIVE POST**
   PRODUCT: Holophane® SiteLink Medium Duty (T2) SL6 Post - 4 track, 5.75" x 5.75", or approved equal.
   FABRICATION PROCESS: Extruded
   EDGES: Smooth
   COLOR: Custom, as noted
   SURFACE PROCESS: Powder-coat all exposed surfaces.
   FASTENER: Weld as required to structural base plate.

2. **CUSTOM POST COVER & BASE**
   POLE: 6" diameter pole
   MATERIAL: 1/8" Fabricated Aluminum
   FABRICATION PROCESS: Extruded / Fabricated
   EDGES: Smooth
   COLOR: Custom, as noted
   SURFACE PROCESS: Paint all exposed surfaces with Matthews Acrylic Polyurethane, with clear coat satin finish.
   FASTENER: Mechanically fastened to post.

3. **SITELINK POST CAP**
   MATERIAL: 1/8" thk Fabricated Aluminum
   FABRICATION PROCESS: Extruded / Fabricated
   EDGES: Smooth
   COLOR: custom, as noted
   SURFACE PROCESS: Powder-coat all exposed surfaces.
   FASTENER: Mechanically fastened to post.

10. **SIGN PANEL FRONT - REFLECTIVE**
    MATERIAL: 1/4" thk Aluminum sheet
    FABRICATION PROCESS: Router Cut
    EDGES: Smooth
    COLOR: custom, as noted
    GRAPHIC BACKGROUND AND COPY PROCESS: 3M custom inks print direct to 3930 with 3M approved UV/ Graffiti Vinyl Over-laminate. (See Color Sheet for all color and material specifications)
    FASTENER: Mechanically fastens to post with SiteLink Cam Lock.

11. **SIGN PANEL BACK - PAINT**
    COLOR: custom, as noted
    SURFACE PROCESS: Paint all exposed surfaces with Matthews Acrylic Polyurethane, with clear coat satin finish.

35. **BREAKAWAY FOOTER**
    FOOTER: The Transpo® Pole-Safe break-away system, according to specifications per the FHWA and AHTD.

NOTES

1. Fabricator to verify the mounting conditions and provide a detail drawing for each mounting situation, prior to fabrication. Fabricator must obtain approval from the Designer or Client for placement prior to fabrication.
2. Welds: All welds shall be ground smooth, paint all seams.
3. Hardware: All exposed hardware shall be tamper proof fasteners.
4. All exposed edges painted to match adjacent face.

ENVIRONMENTS & EXPERIENCES
merje
120 North Church Street
Suite 208
West Chester, PA 19380
T 484.266.0648
www.merjedesign.com

CLIENT / PROJECT
CITY OF BENTONVILLE
Bentonville, Arkansas
Wayfinding and Signage System

PROJECT NO. Y41.08062.000

SUBCONSULTANT

DATE 09/29/2014

DRAWN BY: PR

REVISIONS

SHEET TITLE
Sign Type PARK.1
Parking Lot Identification

SHEET NO.
D.10

These drawings are meant for DESIGN INTENT ONLY and are not for construction. Contractor shall verify and be responsible for all dimensions and conditions of the job. Contractor shall be familiar with the site and conditions it presents. This office must be notified of any variations from the dimensions and conditions shown on this drawing. Shop drawings and details must be submitted to this office for approval prior to proceeding with fabrication. All copy shall be proofread by client and legal requirements checked by legal department.

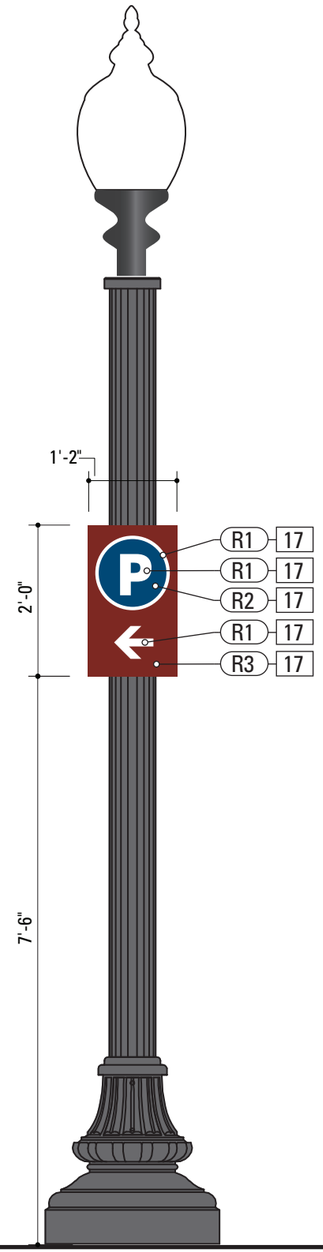

1 Front Elevation: PARK.2
SCALE: 1/2" = 1'-0"

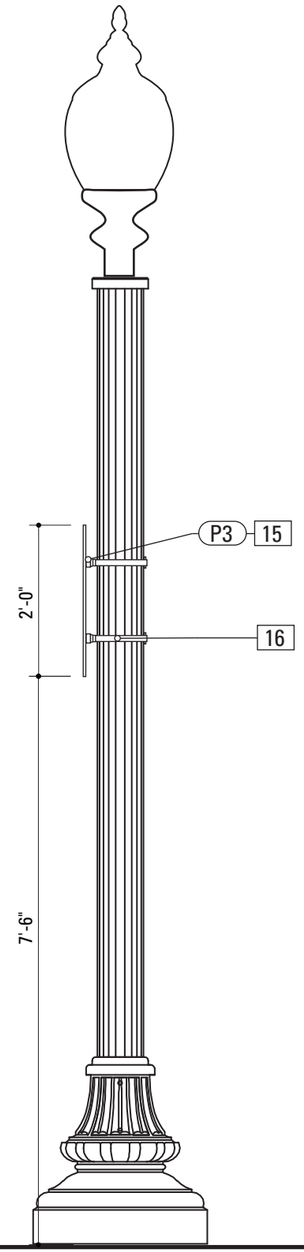

2 Side Elevation: PARK.2
SCALE: 1/2" = 1'-0"

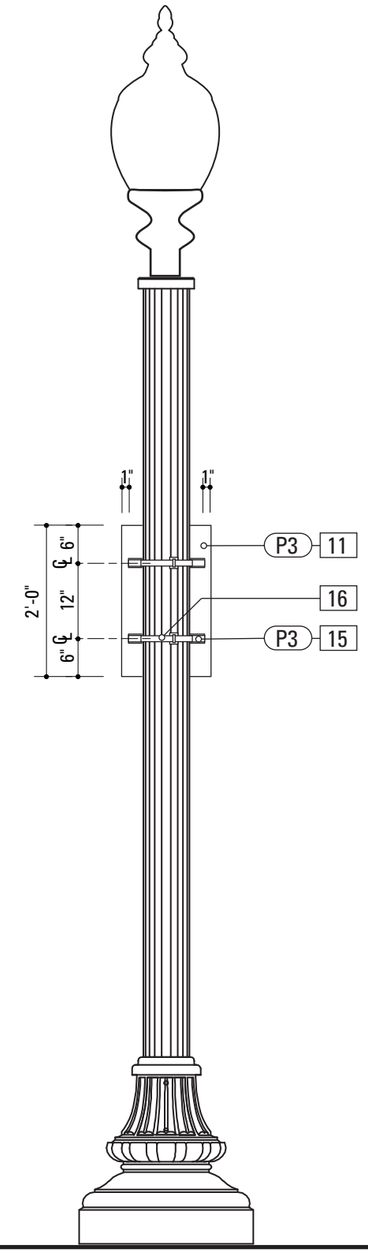

3 Back Elevation: PARK.2
SCALE: 1/2" = 1'-0"

SPECIFICATIONS **SIGN TYPE:** PARK.2 **FUNCTION:** Parking Trailblazer

11. SIGN PANEL BACK - PAINT
COLOR: custom, as noted
SURFACE PROCESS: Paint all exposed surfaces with Matthews Acrylic Polyurethane, with clear coat satin finish.

15. SUPPORT CHANNEL EXTRUSION
PRODUCT: SignFix SX0073 Medium Channel Extrusion
MATERIAL: Aluminum
FABRICATION PROCESS: Extruded
COLOR: Custom, as noted
SURFACE PROCESS: Paint all exposed surfaces with Matthews Acrylic Polyurethane, with clear coat satin finish.
FASTENER: Mechanically fasten to sign panel.

16. POLE STRAP ATTACHMENT
PRODUCT: Band-It Band, or approved equal.
MATERIAL: Type 201 SS
SIZE: 3/4 inch
FINISH: Stainless steel
FASTENER: Ultra-Lok® Free End clamps
NOTE: Sign Contractor to coordinate the removal or movement of interfering existing signs on poles, with the city.

17. SIGN PANEL - 1/8" ALUM
MATERIAL: 1/8" thk Aluminum sheet
FABRICATION PROCESS: Router Cut
EDGES: Smooth
COLOR: custom, as noted
GRAPHIC BACKGROUND AND COPY PROCESS: 3M custom inks print direct to 3930 with 3M approved UV/ Graffiti Vinyl Over-laminate. (See Color Sheet for all color and material specifications)
FASTENER: Mechanically fastens to SignFix extrusion.

NOTES

1. Fabricator to verify the mounting conditions and provide a detail drawing for each mounting situation, prior to fabrication. Fabricator must obtain approval from the Designer or Client for placement prior to fabrication.
2. Welds: All welds shall be ground smooth, paint all seams.
3. Hardware: All exposed hardware shall be tamper proof fasteners.
4. All exposed edges painted to match adjacent face.

ENVIRONMENTS & EXPERIENCES
merje
120 North Church Street
Suite 208
West Chester, PA 19380
T 484.266.0648
www.merjedesign.com

CLIENT / PROJECT
CITY OF BENTONVILLE
Bentonville, Arkansas
Wayfinding and Signage System

PROJECT NO. Y41.08062.000

SUBCONSULTANT

DATE 09/29/2014

DRAWN BY: PR

REVISIONS

SHEET TITLE
Sign Type PARK.2
Parking Trailblazer

SHEET NO. **D.11**

These drawings are meant for DESIGN INTENT ONLY and are not for construction. Contractor shall verify and be responsible for all dimensions and conditions of the job. Contractor shall be familiar with the site and conditions it presents. This office must be notified of any variations from the dimensions and conditions shown on this drawing. Shop drawings and details must be submitted to this office for approval prior to proceeding with fabrication. All copy shall be proofread by client and legal requirements checked by legal department.

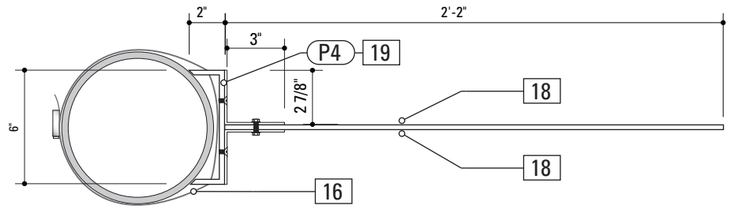

4 Section Detail: PDIR.1
SCALE: 1 1/2" = 1'-0"

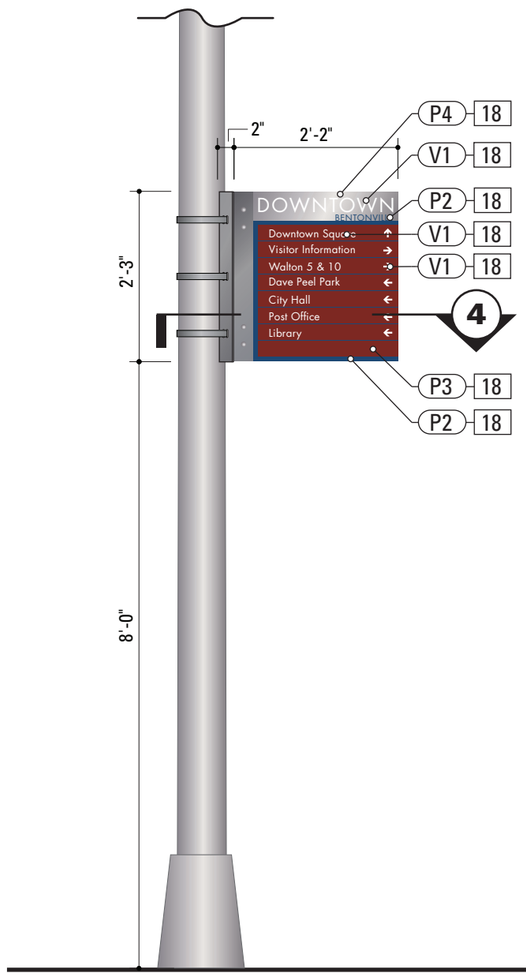

1 Front Elevation: PDIR.1
SCALE: 1/2" = 1'-0"

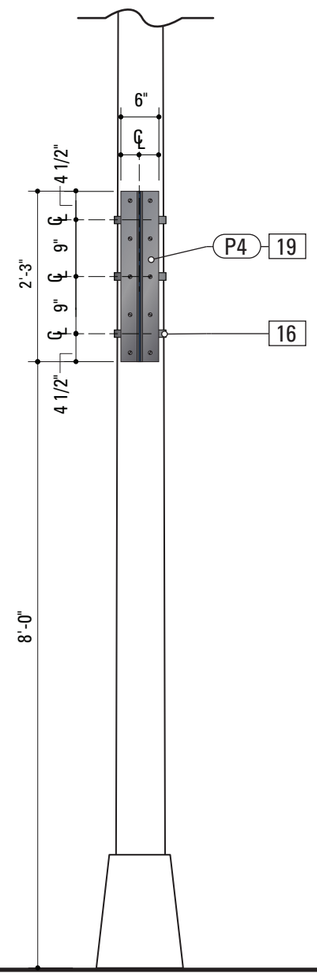

2 Side Elevation: PDIR.1
SCALE: 1/2" = 1'-0"

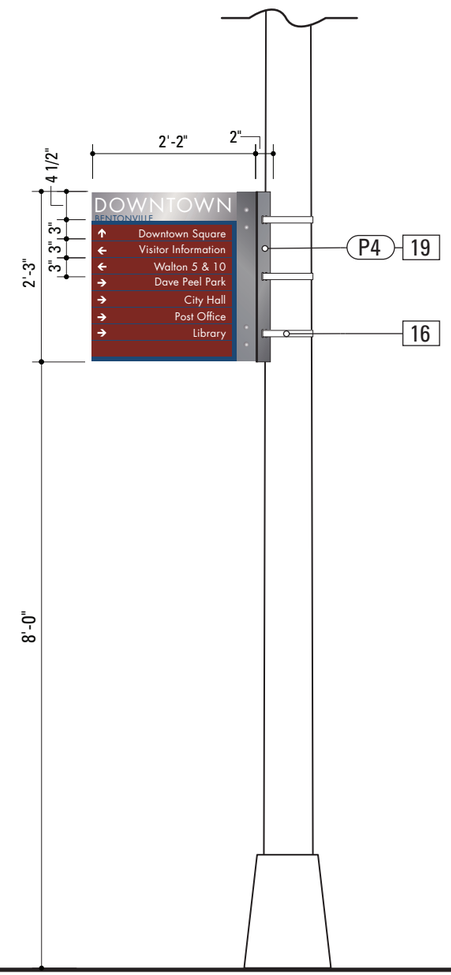

3 Back Elevation: PDIR.1
SCALE: 1/2" = 1'-0"

SPECIFICATIONS **SIGN TYPE:** PDIR.1 **FUNCTION:** Pedestrian Directional

16. POLE STRAP ATTACHMENT
PRODUCT: Band-It Band, or approved equal.
MATERIAL: Type 201 SS
SIZE: 3/4 inch
FINISH: Stainless steel
FASTENER: Ultra-Lok® Free End clamps
NOTE: Sign Contractor to coordinate the removal or movement of interfering existing signs on poles, with the city.

18. SIGN PANEL - PAINT & VINYL
MATERIAL: 3/16" thick Aluminum sheet
FABRICATION PROCESS: Router Cut
EDGES: Square, Smooth
SURFACE PROCESS: Paint all exposed surfaces with Matthews Acrylic Polyurethane, with clear coat satin finish.
GRAPHICS (MESSAGES, LINES & ARROWS): 3M Scotchcal Electrocut Graphic Vinyl Film.
FASTENER: Mechanically fastened to sleeve/bracket with custom aluminum angle. Tamper-proof hardware.

19. BRACKET
MATERIAL: 1/8" + 3/16" thick Aluminum sheet
FABRICATION PROCESS: Router Cut, brake-formed
EDGES: Square, Smooth
SURFACE PROCESS: Paint all exposed surfaces with Matthews Acrylic Polyurethane, with clear coat satin finish.
FASTENER: Mechanically fastened to sign panel. Tamper-proof hardware.

NOTES

1. Fabricator to verify the mounting conditions and provide a detail drawing for each mounting situation, prior to fabrication. Fabricator must obtain approval from the Designer or Client for placement prior to fabrication.
2. Welds: All welds shall be ground smooth, paint all seams.
3. Hardware: All exposed hardware shall be tamper proof fasteners.
4. All exposed edges painted to match adjacent face.

ENVIRONMENTS & EXPERIENCES
merje
120 North Church Street
Suite 208
West Chester, PA 19380
T 484.266.0648
www.merjedesign.com

CLIENT / PROJECT
CITY OF BENTONVILLE
Bentonville, Arkansas
Wayfinding and Signage System

PROJECT NO. Y41.08062.000

SUBCONSULTANT

DATE 09/29/2014

DRAWN BY: PR

REVISIONS

SHEET TITLE
Sign Type PDIR.1
Pedestrian Directional

SHEET NO.
D.12

These drawings are meant for DESIGN INTENT ONLY and are not for construction. Contractor shall verify and be responsible for all dimensions and conditions of the job. Contractor shall be familiar with the site and conditions it presents. This office must be notified of any variations from the dimensions and conditions shown on this drawing. Shop drawings and details must be submitted to this office for approval prior to proceeding with fabrication. All copy shall be proofread by client and legal requirements checked by legal department.

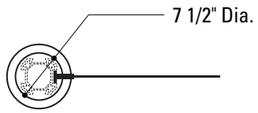

3 Plan View: PDIR.2
SCALE: 1/2" = 1'-0"

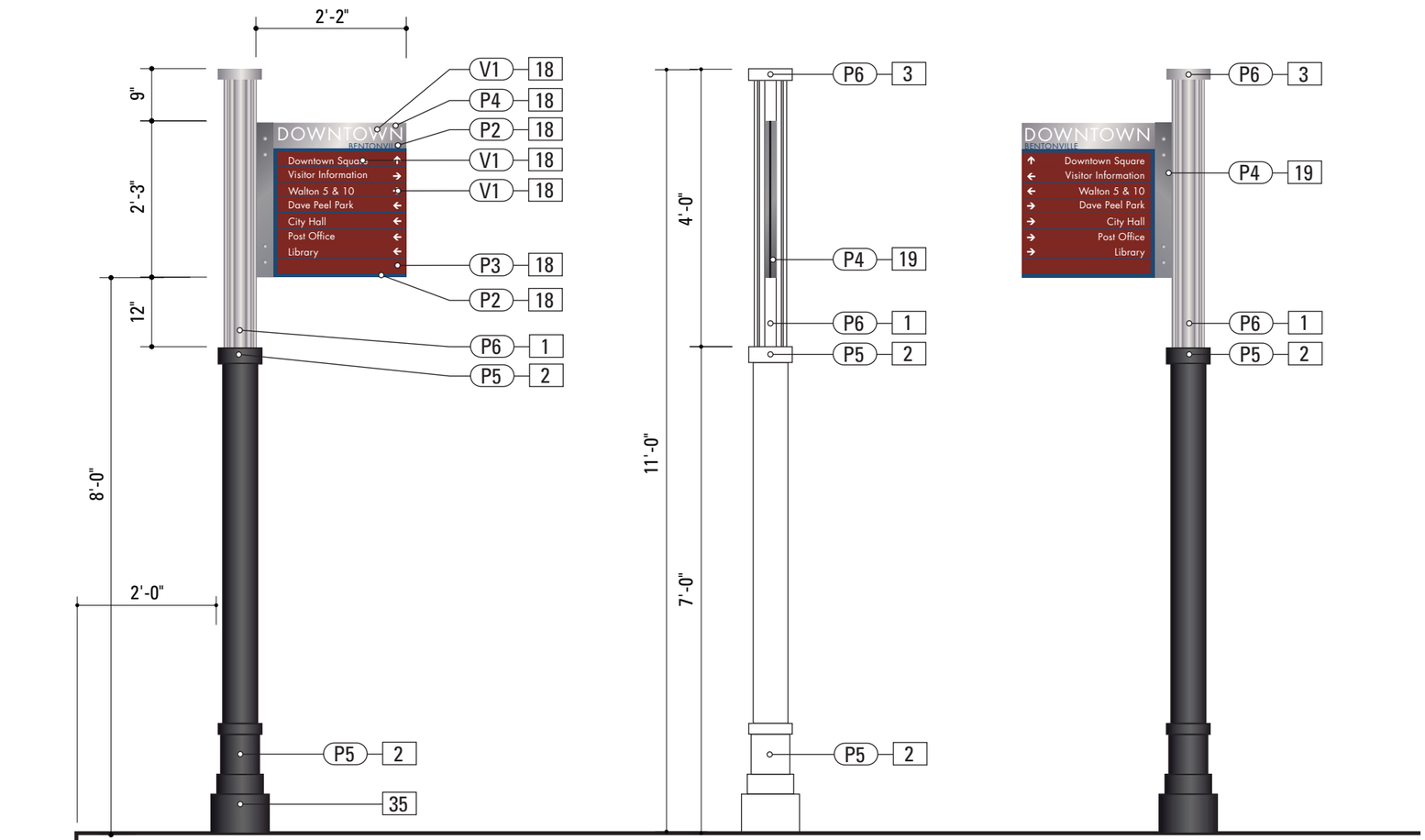

1 Elevation: PDIR.2 Side A
SCALE: 1/2" = 1'-0"

2 Side View: PDIR.2
SCALE: 1/2" = 1'-0"

4 Elevation: PDIR.2 Side B
SCALE: 1/2" = 1'-0"

SPECIFICATIONS **SIGN TYPE:** PDIR.2 **FUNCTION:** Pedestrian Directional

1. SITELINK DECORATIVE POST
PRODUCT: Holophane® SiteLink Medium Duty (T2) SL6 Post - 4 track, 5.75" x 5.75", or approved equal.
FABRICATION PROCESS: Extruded
EDGES: Smooth
COLOR: Custom, as noted
SURFACE PROCESS: Powder-coat all exposed surfaces.
FASTENER: Weld as required to structural base plate.

2. CUSTOM POST COVER & BASE
POLE: 6" diameter pole
MATERIAL: 1/8" Fabricated Aluminum
FABRICATION PROCESS: Extruded / Fabricated
EDGES: Smooth
COLOR: Custom, as noted
SURFACE PROCESS: Paint all exposed surfaces with Matthews Acrylic Polyurethane, with clear coat satin finish.
FASTENER: Mechanically fastened to post.

3. SITELINK POST CAP
MATERIAL: 1/8" thk Fabricated Aluminum
FABRICATION PROCESS: Extruded / Fabricated
EDGES: Smooth
COLOR: custom, as noted
SURFACE PROCESS: Powder-coat all exposed surfaces.
FASTENER: Mechanically fastened to post.

16. POLE STRAP ATTACHMENT
PRODUCT: Band-It Band, or approved equal.
MATERIAL: Type 201 SS
SIZE: 3/4 inch
FINISH: Stainless steel
FASTENER: Ultra-Lok® Free End clamps
NOTE: Sign Contractor to coordinate the removal or movement of interfering existing signs on poles, with the city.

18. SIGN PANEL - PAINT & VINYL
MATERIAL: 3/16" thick Aluminum sheet
FABRICATION PROCESS: Router Cut
EDGES: Square, Smooth
SURFACE PROCESS: Paint all exposed surfaces with Matthews Acrylic Polyurethane, with clear coat satin finish.
GRAPHICS (MESSAGES, LINES & ARROWS): 3M Scotchcal Electrocut Graphic Vinyl Film.
FASTENER: Mechanically fastened to sleeve/bracket with custom aluminum angle. Tamper-proof hardware.

19. BRACKET +
MATERIAL: 1/8" + 3/16" thick Aluminum sheet
FABRICATION PROCESS: Router Cut
EDGES: Square, Smooth
SURFACE PROCESS: Paint all exposed surfaces with Matthews Acrylic Polyurethane, with clear coat satin finish.
FASTENER: Tamper-proof hardware. Mechanically fastens to post with SiteLink Cam Lock.

35. BREAKAWAY FOOTER
FOOTER: The Transpo® Pole-Safe break-away system, according to specifications per the FHWA and AHTD.

NOTES

1. Fabricator to verify the mounting conditions and provide a detail drawing for each mounting situation, prior to fabrication. Fabricator must obtain approval from the Designer or Client for placement prior to fabrication.
2. Welds: All welds shall be ground smooth, paint all seams.
3. Hardware: All exposed hardware shall be tamper proof fasteners.
4. All exposed edges painted to match adjacent face.

ENVIRONMENTS & EXPERIENCES
merje
120 North Church Street
Suite 208
West Chester, PA 19380
T 484.266.0648
www.merjedesign.com

CLIENT / PROJECT
CITY OF BENTONVILLE
Bentonville, Arkansas
Wayfinding and Signage System

PROJECT NO. Y41.08062.000

SUBCONSULTANT

DATE 09/29/2014

DRAWN BY: PR

REVISIONS

SHEET TITLE
Sign Type PDIR.2
Pedestrian Directional

SHEET NO.
D.13

These drawings are meant for DESIGN INTENT ONLY and are not for construction. Contractor shall verify and be responsible for all dimensions and conditions of the job. Contractor shall be familiar with the site and conditions it presents. This office must be notified of any variations from the dimensions and conditions shown on this drawing. Shop drawings and details must be submitted to this office for approval prior to proceeding with fabrication. All copy shall be proofread by client and legal requirements checked by legal department.

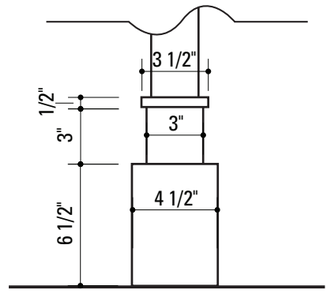

4 Pole Detail: KIOSK.1
SCALE: 1 1/2" = 1'-0"

Possible Graphic Panel Configurations

Option 1
Side (A) - Downtown Map
Side (B) - City / Regional Map

Option 2
Side (A) - Downtown Map
Side (B) - Event Poster / Interpretive Panel

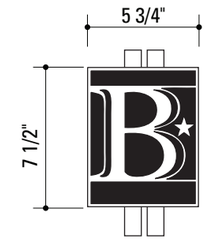

5 Plaque Detail: KIOSK.1
SCALE: 1 1/2" = 1'-0"

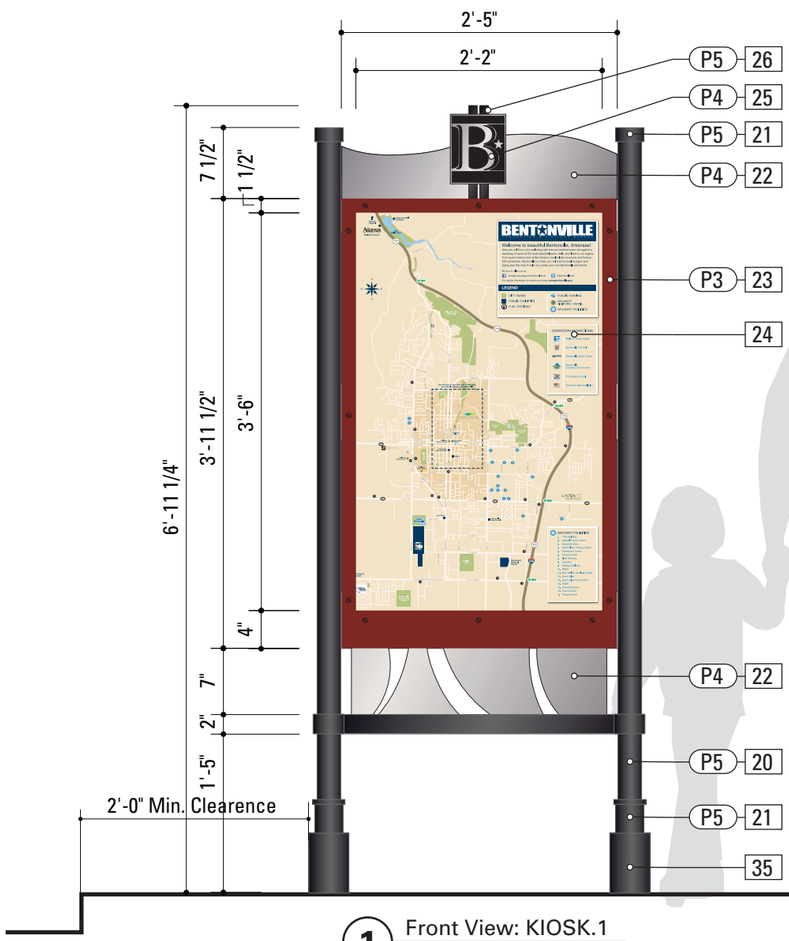

1 Front View: KIOSK.1
SCALE: 3/4" = 1'-0"

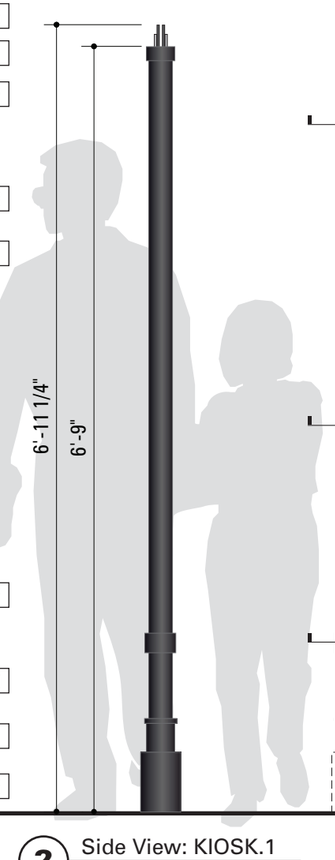

2 Side View: KIOSK.1
SCALE: 3/4" = 1'-0"

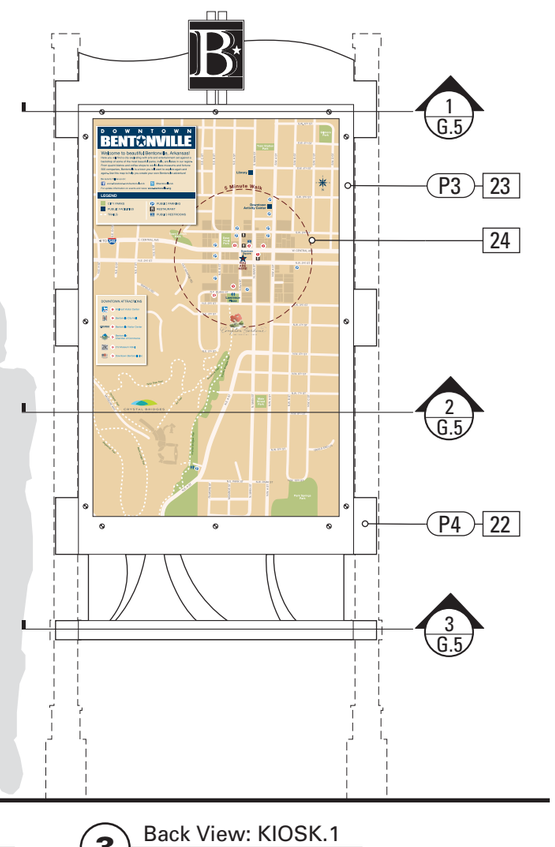

3 Back View: KIOSK.1
SCALE: 3/4" = 1'-0"

SPECIFICATIONS **SIGN TYPE:** KIOSK.1 **FUNCTION:** Pedestrian Kiosk

20. KIOSK POLE
MATERIAL: Aluminum SCH 40 Pipe 6061T6 - 2 (2.375" OD x .154" wall)
FABRICATION PROCESS: Extruded
EDGES: Smooth
COLOR: Custom, as noted
SURFACE PROCESS: Paint all exposed surfaces with Matthews Acrylic Polyurethane, with clear coat satin finish.
FOOTER: As per AHTD breakaway specs.

22. KIOSK CENTER PANEL
MATERIAL: 1/4" thick Aluminum sheet
FABRICATION PROCESS: Router Cut
EDGES: Square, Smooth
SURFACE PROCESS: Paint all exposed surfaces with Matthews Acrylic Polyurethane, with clear coat satin finish.
FASTENER: Plug-weld into poles

23. KIOSK FRAME PANELS
MATERIAL: 1/4" thick Aluminum sheet
FABRICATION PROCESS: Router Cut. Back side must have +1/8" router cut inset for graphic panel.
EDGES: Square, Smooth
SURFACE PROCESS: Paint all exposed surfaces with Matthews Acrylic Polyurethane, with clear coat satin finish.
FASTENER: Mechanically fastened to Center Panel, with tamper-proof fasteners.

24. MAP GRAPHIC PANEL
PRODUCT NAME: iZone, 2526 Charter Oak Drive, Suite 100, Temple, Texas 76502 (888) 464-9663, www.izoneimaging.com, email: info@izoneimaging.com
PRODUCT: Digital high pressure phenolic laminate (dHPL)
GRAPHIC APPROVAL PROCESS: Submit 12x12" sample section of typical project panel for image and color quality approval.
WARRANTY PERIOD: Ten (10) years from product ship date.
THICKNESS: 1/8 inch
FINISH: Satin, including UV inhibiting top layer.
FASTENER: Fits within frame area, minimal double-face tape across back to stop bowing of panel.

GRAPHIC PANEL SIZE:
Recommended overall size: 26 1/2"W x 42 1/2"H min.
Live (window) area: 26"W x 42"H

25. KIOSK LOGO PLAQUE
MATERIAL: 1/4" thick Aluminum sheet, or approved equal.
FABRICATION PROCESS: Router Cut; Router cut graphics 1/16" deep into top surface.
EDGES: Square, Smooth
SURFACE PROCESS: Paint all exposed surfaces with Matthews Acrylic Polyurethane, with clear coat satin finish.
FASTENER: Mechanically fasten from the back to aluminum backer rails.

26. KIOSK LOGO PLAQUE RAILS
MATERIAL: 1/4" thick Aluminum sheet
FABRICATION PROCESS: Router Cut
EDGES: Square, Smooth
SURFACE PROCESS: Paint all exposed surfaces with Matthews Acrylic Polyurethane, with clear coat satin finish.
FASTENER: Mechanically fasten to center panel.

35. BREAKAWAY FOOTER
FOOTER: The Transpo® Pole-Safe break-away system, according to specifications per the FHWA and AHTD.

NOTES
1. Fabricator to verify the mounting conditions and provide a detail drawing for each mounting situation, prior to fabrication. Fabricator must obtain approval from the Designer or Client for placement prior to fabrication.
2. Welds: All welds shall be ground smooth, paint all seams.
3. Hardware: All exposed hardware shall be tamper proof fasteners.
4. All exposed edges painted to match adjacent face.

ENVIRONMENTS & EXPERIENCES
merje
120 North Church Street
Suite 208
West Chester, PA 19380
T 484.266.0648
www.merjedesign.com

CLIENT / PROJECT
CITY OF BENTONVILLE
Bentonville, Arkansas
Wayfinding and Signage System

PROJECT NO. Y41.08062.000

SUBCONSULTANT

DATE 09/29/2014

DRAWN BY: PR

REVISIONS

SHEET TITLE
Sign Type KIOSK.1
Pedestrian Kiosk

SHEET NO.
D.14

These drawings are meant for DESIGN INTENT ONLY and are not for construction. Contractor shall verify and be responsible for all dimensions and conditions of the job. Contractor shall be familiar with the site and conditions it presents. This office must be notified of any variations from the dimensions and conditions shown on this drawing. Shop drawings and details must be submitted to this office for approval prior to proceeding with fabrication. All copy shall be proofread by client and legal requirements checked by legal department.

Possible Graphic Panel Configurations

Option 1
Side (A) - Downtown Map
Side (B) - City / Regional Map

Option 2
Side (A) - Downtown Map
Side (B) - Event Poster / Interpretive Panel

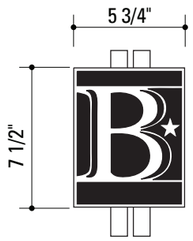

4 Plaque Detail: KIOSK.2
SCALE: 1 1/2" = 1'-0"

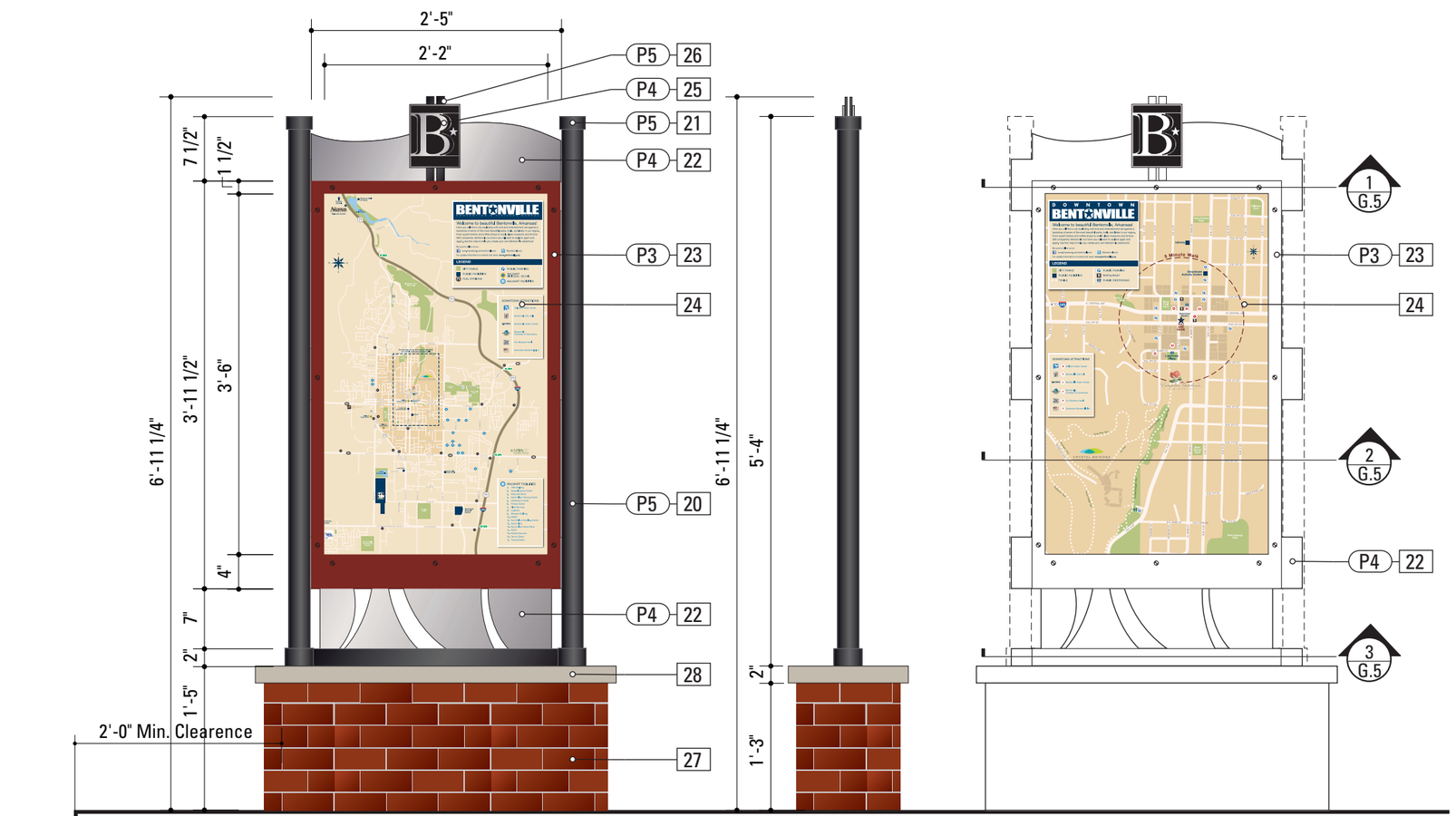

1 Front View: KIOSK.2
SCALE: 3/4" = 1'-0"

2 Side View: KIOSK.2
SCALE: 3/4" = 1'-0"

3 Back View: KIOSK.2
SCALE: 3/4" = 1'-0"

SPECIFICATIONS **SIGN TYPE:** KIOSK.2 **FUNCTION:** Pedestrian Kiosk

20. KIOSK POLE
MATERIAL: Aluminum SCH 40 Pipe 6061T6 - 2 (2.375" OD x .154" wall)
FABRICATION PROCESS: Extruded
EDGES: Smooth
COLOR: Custom, as noted
SURFACE PROCESS: Paint all exposed surfaces with Matthews Acrylic Polyurethane, with clear coat satin finish.
FOOTER: As per AHTD breakaway specs.

22. KIOSK CENTER PANEL
MATERIAL: 1/4" thick Aluminum sheet
FABRICATION PROCESS: Router Cut
EDGES: Square, Smooth
SURFACE PROCESS: Paint all exposed surfaces with Matthews Acrylic Polyurethane, with clear coat satin finish.
FASTENER: Plug-weld into poles

23. KIOSK FRAME PANELS
MATERIAL: 1/4" thick Aluminum sheet
FABRICATION PROCESS: Router Cut. Back side must have +1/8" router cut inset for graphic panel.
EDGES: Square, Smooth
SURFACE PROCESS: Paint all exposed surfaces with Matthews Acrylic Polyurethane, with clear coat satin finish.
FASTENER: Mechanically fastened to Center Panel, with tamper-proof fasteners.

24. MAP GRAPHIC PANEL
PRODUCT NAME: iZone, 2526 Charter Oak Drive, Suite 100, Temple, Texas 76502 (888) 464-9663, www.izoneimaging.com, email: info@izoneimaging.com
PRODUCT: Digital high pressure phenolic laminate (dHPL)
GRAPHIC APPROVAL PROCESS: Submit 12x12" sample section of typical project panel for image and color quality approval.
WARRANTY PERIOD: Ten (10) years from product ship date.
THICKNESS: 1/8 inch
FINISH: Satin, including UV inhibiting top layer.
FASTENER: Fits within frame area, minimal double-face tape across back to stop bowing of panel.

GRAPHIC PANEL SIZE:
Recommended overall size: 26 1/2"W x 42 1/2"H min.
Live (window) area: 26"W x 42"H

25. KIOSK LOGO PLAQUE
MATERIAL: 1/4" thick Aluminum sheet, or approved equal.
FABRICATION PROCESS: Router Cut; Router cut graphics 1/16" deep into top surface.
EDGES: Square, Smooth
SURFACE PROCESS: Paint all exposed surfaces with Matthews Acrylic Polyurethane, with clear coat satin finish.
FASTENER: Mechanically fasten from the back to aluminum backer rails.

26. KIOSK LOGO PLAQUE RAILS
MATERIAL: 1/4" thick Aluminum sheet
FABRICATION PROCESS: Router Cut
EDGES: Square, Smooth
SURFACE PROCESS: Paint all exposed surfaces with Matthews Acrylic Polyurethane, with clear coat satin finish.
FASTENER: Mechanically fasten to center panel.

27. KIOSK BRICK BASE
MATERIAL: Partition cinderblock core and brick facade to match streetscape plan, or chosen by client.
BRICK STYLE: Modular or Standard brick
BRICK PATTERN: Running brick bond pattern
FABRICATION PROCESS: Brick with grouting, technique to match streetscape plan, or chosen by client.
FASTENER: Mortar to CMU block utilizing metal straps. Grout seams.
COLOR: Match streetscape plan, or chosen by client
NOTE: Brick must extend below grade 3 to 6 inches.

28. KIOSK BRICK BASE-TOP
MATERIAL: Concrete slabs, color to match streetscape plan, or chosen by client.
FABRICATION PROCESS: Poured concrete slabs.
EDGES: Square
GROUT: To match utilized in Kiosk Brick Base.
FASTENER: Mortar to CMU block and brick.

NOTES

1. Fabricator to verify the mounting conditions and provide a detail drawing for each mounting situation, prior to fabrication. Fabricator must obtain approval from the Designer or Client for placement prior to fabrication.
2. Welds: All welds shall be ground smooth, paint all seams.
3. Hardware: All exposed hardware shall be tamper proof fasteners.
4. All exposed edges painted to match adjacent face.

ENVIRONMENTS & EXPERIENCES
merje
120 North Church Street
Suite 208
West Chester, PA 19380
T 484.266.0648
www.merjedesign.com

CLIENT / PROJECT
CITY OF BENTONVILLE
Bentonville, Arkansas
Wayfinding and Signage System

PROJECT NO. Y41.08062.000

SUBCONSULTANT

DATE 09/29/2014

DRAWN BY: PR

REVISIONS

SHEET TITLE
Sign Type KIOSK.2
Pedestrian Kiosk
w/brick base

SHEET NO.
D.15

These drawings are meant for DESIGN INTENT ONLY and are not for construction. Contractor shall verify and be responsible for all dimensions and conditions of the job. Contractor shall be familiar with the site and conditions it presents. This office must be notified of any variations from the dimensions and conditions shown on this drawing. Shop drawings and details must be submitted to this office for approval prior to proceeding with fabrication. All copy shall be proofread by client and legal requirements checked by legal department.

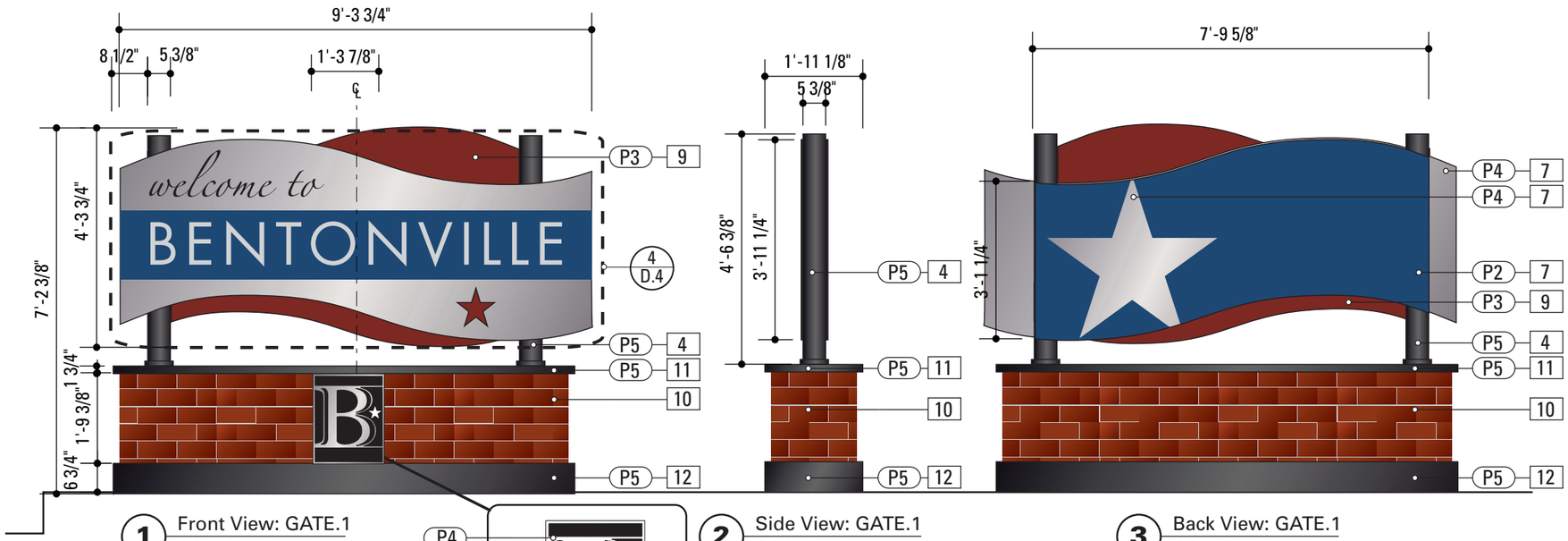

1 Front View: GATE.1
SCALE: 3/8" = 1'-0"

2 Side View: GATE.1
SCALE: 3/8" = 1'-0"

3 Back View: GATE.1
SCALE: 3/8" = 1'-0"

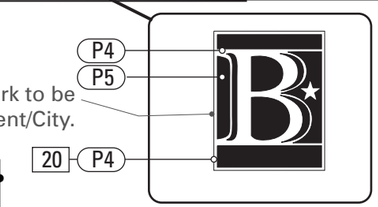

City Logo Artwork to be provided by Client/City.

4 Graphic Layout: GATE.1
SCALE: 3/4" = 1'-0"

SPECIFICATIONS **SIGN TYPE:** GATE.1 **FUNCTION:** Major City Gateway

4. POLE
POLE: 5 1/2" dia. 1/4" thick Aluminum
BASE: 6" dia. Round 1/2" thick Aluminum
MATERIAL: Aluminum
FABRICATION PROCESS: Extruded Weld to Pole Base.
EDGES: Smooth/Top Capped
COLOR: custom, as noted
SURFACE PROCESS: paint all exposed surfaces as noted. Refer to color page for specifications
FASTENER: Weld to Base CAP Assembly

7. SIGN PANEL
MATERIAL: 1/4" thk Aluminum
FABRICATION PROCESS: Contour Cut
EDGES: Point Precise Corners No overcutting or rounded corners
COLOR: custom, as noted
SURFACE PROCESS: Paint all exposed surfaces
TOPCOAT: MPC: Acrylic Polyurethane Satin MAP
CLEARCOAT: MPC: Acrylic Polyurethane 42228 MAP Clear Satin
FASTENER: Weld to bracket
Vinyl Background and/or Seperate Graphic Lettering applied to front face of Sign Panel. See Color Page for Specifications

8. CUTOUT
FABRICATION PROCESS: Stamp/Router Cut
EDGES: Point Precise Corners No overcutting or rounded corners
COLOR: None OPEN to rear panel

9. DECORATIVE SIGN PANEL
MATERIAL: 1/4" thk Aluminum
FABRICATION PROCESS: Contour Cut
EDGES: Smooth
COLOR: custom, as noted
SURFACE PROCESS: Paint all exposed surfaces as noted. Refer to color page for specifications
FASTENER: Weld to Pole Assembly

10. BRICK BASE
MATERIAL: BRICK
PROCESS: Veneer
MATCH: Downtown Square Pavers.
SAMPLE: City to provide specification
FASTENER: Morter to Internal CMU Structure.
FOOTER: TRANSPO BRAND Breakaway Footer if located within DOT Right of Way. Ref Footer Section for Details. Fabrication Details to be provided by Fabricator for DOT approval.

11. BASE CAP ASSEMBLY
MATERIAL: 1/4" Fabricated Alum.
FABRICATION PROCESS: Cut-Weld Top
EDGES: Smooth-Grind Welds Smooth
SURFACE PROCESS: paint all exposed surfaces as noted. Refer to color page for specifications
FASTENER: Mech. Fasten to Brick Base/ Pole

12. BASE
MATERIAL: 1/4" Fabricated Alum.
FABRICATION PROCESS: Cut-Weld Top
EDGES: Smooth-Grind Welds Smooth
SURFACE PROCESS: paint all exposed surfaces as noted. Refer to color page for specifications
FASTENER: Mech. Fasten to Brick Base Conceals Footer Detail.

20. LOGO PLAQUE
MATERIAL: 1/4" Aluminum
COLOR: Integral to match P4 Aluminum. Fill P5.
FABRICATION PROCESS: Router Cut
EDGES: Smooth-Grind Welds Smooth
SURFACE PROCESS: Recessed/Raised Graphics Paint all exposed surfaces as noted. Refer to color page for specifications
FASTENER: Mech. Fasten hidden rear to Plaque Backer. as required

Note: External Lighting Fixtures are to be provided to light the face of the sign at night. The Fabricator is to provide enough fixtures to produce an even and uniform washing of light. Light fixtures are to be UL rated and housed for external use. The Fabricator is to coordinate electrical requirements, location and electrical feed with the city and designers, as well as be familier with local codes and city guidelines. Power will be provided by the city within 6 feet of the final location. Locations TBD.
Lighting Product: Color Kinetics BRAND- Fixed White LED suitable for Application Shown. Fabricator to contact Color Kinetics for recommended fixture.

NOTES
1. Fabricator to verify the mounting conditions and provide a detail drawing for each mounting situation, prior to fabrication. Fabricator must obtain approval from the Designer or Client for placement prior to fabrication.
2. Welds: All welds shall be ground smooth, paint all seams.
3. Hardware: All exposed hardware shall be tamper proof fasteners.
4. All exposed edges painted to match adjacent face.

ENVIRONMENTS & EXPERIENCES
merje
120 North Church Street
Suite 208
West Chester, PA 19380
T 484.266.0648
www.merjedesign.com

CLIENT / PROJECT
CITY OF BENTONVILLE
Bentonville, Arkansas
Wayfinding and Signage System

PROJECT NO. Y41.08062.000

SUBCONSULTANT

DATE 09/29/2014

DRAWN BY: PR

REVISIONS

SHEET TITLE
Sign Type GATE.1
Major City Gateway

SHEET NO.
D.16

These drawings are meant for DESIGN INTENT ONLY and are not for construction. Contractor shall verify and be responsible for all dimensions and conditions of the job. Contractor shall be familiar with the site and conditions it presents. This office must be notified of any variations from the dimensions and conditions shown on this drawing. Shop drawings and details must be submitted to this office for approval prior to proceeding with fabrication. All copy shall be proofread by client and legal requirements checked by legal department.

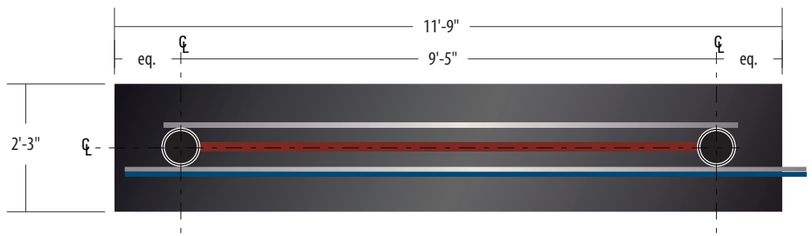

3 Top View: GATE.1a
SCALE: 3/8" = 1'-0"

See Sheet D.18 for Back View

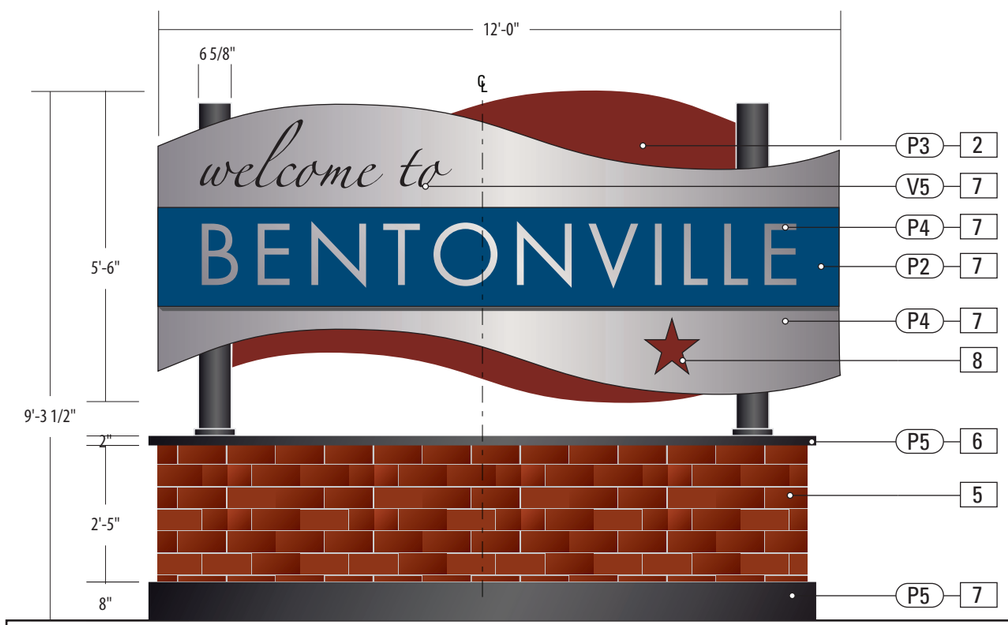

1 Front View: GATE.1a
SCALE: 3/8" = 1'-0"

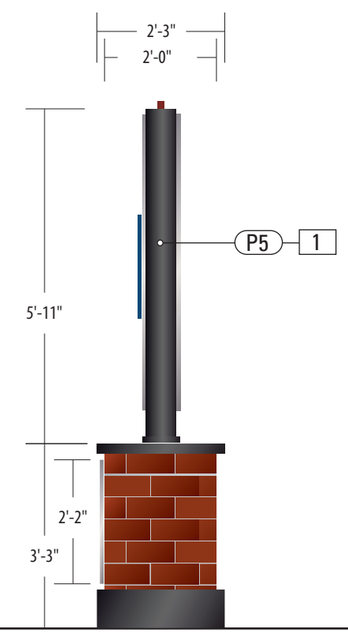

2 Side View: GATE.1a
SCALE: 3/8" = 1'-0"

SPECIFICATIONS **SIGN TYPE:** GATE.1a **FUNCTION:** Major City Gateway

4. POLE
POLE: 5 1/2" dia. 1/4" thick Aluminum
BASE: 6" dia. Round 1/2" thick Aluminum
MATERIAL: Aluminum
FABRICATION PROCESS: Extruded Weld to Pole Base.
EDGES: Smooth/Top Capped
COLOR: custom, as noted
SURFACE PROCESS: paint all exposed surfaces as noted. Refer to color page for specifications
FASTENER: Weld to Base CAP Assembly

7. SIGN PANEL
MATERIAL: 1/4" thk Aluminum
FABRICATION PROCESS: Contour Cut
EDGES: Point Precise Corners No overcutting or rounded corners
COLOR: custom, as noted
SURFACE PROCESS: Paint all exposed surfaces
TOPCOAT: MPC: Acrylic Polyurethane Satin MAP
CLEARCOAT: MPC: Acrylic Polyurethane 42228 MAP Clear Satin
FASTENER: Weld to bracket
Vinyl Background and/or Seperate Graphic Lettering applied to front face of Sign Panel. See Color Page for Specifications

8. CUTOUT
FABRICATION PROCESS: Stamp/Router Cut
EDGES: Point Precise Corners No overcutting or rounded corners
COLOR: None OPEN to rear panel

9. DECORATIVE SIGN PANEL
MATERIAL: 1/4" thk Aluminum
FABRICATION PROCESS: Contour Cut
EDGES: Smooth
COLOR: custom, as noted
SURFACE PROCESS: Paint all exposed surfaces as noted. Refer to color page for specifications
FASTENER: Weld to Pole Assembly

10. BRICK BASE
MATERIAL: BRICK
PROCESS: Veneer
MATCH: Downtown Square Pavers.
SAMPLE: City to provide specification
FASTENER: Morter to Internal CMU Structure.
FOOTER: TRANSPO BRAND Breakaway Footer if located within DOT Right of Way. Ref Footer Section for Details. Fabrication Details to be provided by Fabricator for DOT approval.

11. BASE CAP ASSEMBLY
MATERIAL: 1/4" Fabricated Alum.
FABRICATION PROCESS: Cut-Weld Top
EDGES: Smooth-Grind Welds Smooth
SURFACE PROCESS: paint all exposed surfaces as noted. Refer to color page for specifications
FASTENER: Mech. Fasten to Brick Base/ Pole

12. BASE
MATERIAL: 1/4" Fabricated Alum.
FABRICATION PROCESS: Cut-Weld Top
EDGES: Smooth-Grind Welds Smooth
SURFACE PROCESS: paint all exposed surfaces as noted. Refer to color page for specifications
FASTENER: Mech. Fasten to Brick Base Conceals Footer Detail.

20. LOGO PLAQUE
MATERIAL: 1/4" Aluminum
COLOR: Integral to match P4 Aluminum. Fill P5.
FABRICATION PROCESS: Router Cut
EDGES: Smooth-Grind Welds Smooth
SURFACE PROCESS: Recessed/Raised Graphics Paint all exposed surfaces as noted. Refer to color page for specifications
FASTENER: Mech. Fasten hidden rear to Plaque Backer. as required

Note: External Lighting Fixtures are to be provided to light the face of the sign at night. The Fabricator is to provide enough fixtures to produce an even and uniform washing of light. Light fixtures are to be UL rated and housed for external use. The Fabricator is to coordinate electrical requirements, location and electrical feed with the city and designers, as well as be familier with local codes and city guidelines. Power will be provided by the city within 6 feet of the final location. Locations TBD.

Lighting Product: Color Kinetics BRAND- Fixed White LED suitable for Application Shown. Fabricator to contact Color Kinetics for recommended fixture.

NOTES

1. Fabricator to verify the mounting conditions and provide a detail drawing for each mounting situation, prior to fabrication. Fabricator must obtain approval from the Designer or Client for placement prior to fabrication.
2. Welds: All welds shall be ground smooth, paint all seams.
3. Hardware: All exposed hardware shall be tamper proof fasteners.
4. All exposed edges painted to match adjacent face.

ENVIRONMENTS & EXPERIENCES
merje
120 North Church Street
Suite 208
West Chester, PA 19380
T 484.266.0648
www.merjedesign.com

CLIENT / PROJECT
CITY OF BENTONVILLE
Bentonville, Arkansas
Wayfinding and Signage System

PROJECT NO. Y41.08062.000

SUBCONSULTANT

DATE 09/29/2014

DRAWN BY: PR

REVISIONS

SHEET TITLE
Sign Type GATE.1a
Major City Gateway
Front View

SHEET NO. **D.17**

These drawings are meant for DESIGN INTENT ONLY and are not for construction. Contractor shall verify and be responsible for all dimensions and conditions of the job. Contractor shall be familiar with the site and conditions it presents. This office must be notified of any variations from the dimensions and conditions shown on this drawing. Shop drawings and details must be submitted to this office for approval prior to proceeding with fabrication. All copy shall be proofread by client and legal requirements checked by legal department.

See Sheet D.17 for Front View

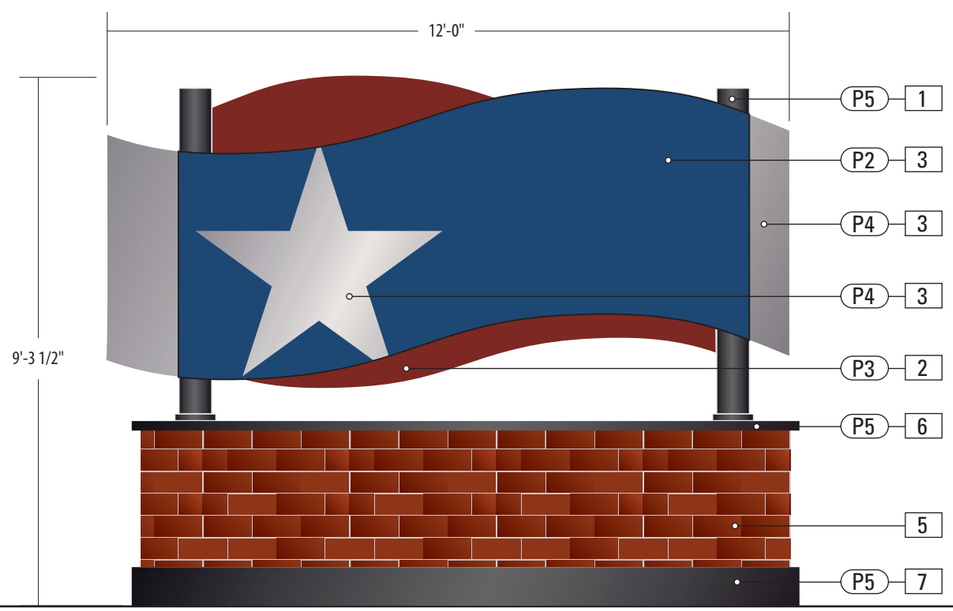

1 Back View: GATE.1a
SCALE: 3/8" = 1'-0"

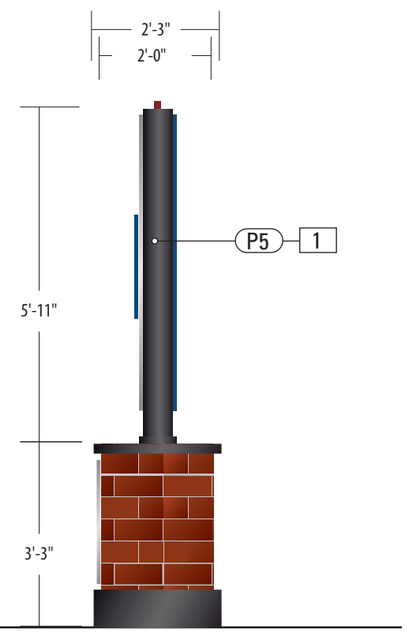

2 Side View: GATE.1a
SCALE: 3/8" = 1'-0"

SPECIFICATIONS **SIGN TYPE:** GATE.1a **FUNCTION:** Major City Gateway

4. POLE
POLE: 5 1/2" dia. 1/4" thick Aluminum
BASE: 6" dia. Round 1/2" thick Aluminum
MATERIAL: Aluminum
FABRICATION PROCESS: Extruded Weld to Pole Base.
EDGES: Smooth/Top Capped
COLOR: custom, as noted
SURFACE PROCESS: paint all exposed surfaces as noted. Refer to color page for specifications
FASTENER: Weld to Base CAP Assembly

7. SIGN PANEL
MATERIAL: 1/4" thk Aluminum
FABRICATION PROCESS: Contour Cut
EDGES: Point Precise Corners No overcutting or rounded corners
COLOR: custom, as noted
SURFACE PROCESS: Paint all exposed surfaces
TOPCOAT: MPC: Acrylic Polyurethane Satin MAP
CLEARCOAT: MPC: Acrylic Polyurethane 42228 MAP Clear Satin
FASTENER: Weld to bracket
Vinyl Background and/or Seperate Graphic Lettering applied to front face of Sign Panel. See Color Page for Specifications

8. CUTOUT
FABRICATION PROCESS: Stamp/Router Cut
EDGES: Point Precise Corners No overcutting or rounded corners
COLOR: None OPEN to rear panel

9. DECORATIVE SIGN PANEL
MATERIAL: 1/4" thk Aluminum
FABRICATION PROCESS: Contour Cut
EDGES: Smooth
COLOR: custom, as noted
SURFACE PROCESS: Paint all exposed surfaces as noted. Refer to color page for specifications
FASTENER: Weld to Pole Assembly

10. BRICK BASE
MATERIAL: BRICK
PROCESS: Veneer
MATCH: Downtown Square Pavers.
SAMPLE: City to provide specification
FASTENER: Morter to Internal CMU Structure.
FOOTER: TRANSPO BRAND Breakaway Footer if located within DOT Right of Way. Ref Footer Section for Details. Fabrication Details to be provided by Fabricator for DOT approval.

11. BASE CAP ASSEMBLY
MATERIAL: 1/4" Fabricated Alum.
FABRICATION PROCESS: Cut-Weld Top
EDGES: Smooth-Grind Welds Smooth
SURFACE PROCESS: paint all exposed surfaces as noted. Refer to color page for specifications
FASTENER: Mech. Fasten to Brick Base/ Pole

12. BASE
MATERIAL: 1/4" Fabricated Alum.
FABRICATION PROCESS: Cut-Weld Top
EDGES: Smooth-Grind Welds Smooth
SURFACE PROCESS: paint all exposed surfaces as noted. Refer to color page for specifications
FASTENER: Mech. Fasten to Brick Base Conceals Footer Detail.

20. LOGO PLAQUE
MATERIAL: 1/4" Aluminum
COLOR: Integral to match P4 Aluminum. Fill P5.
FABRICATION PROCESS: Router Cut
EDGES: Smooth-Grind Welds Smooth
SURFACE PROCESS: Recessed/Raised Graphics Paint all exposed surfaces as noted. Refer to color page for specifications
FASTENER: Mech. Fasten hidden rear to Plaque Backer. as required

Note: External Lighting Fixtures are to be provided to light the face of the sign at night. The Fabricator is to provide enough fixtures to produce an even and uniform washing of light. Light fixtures are to be UL rated and housed for external use. The Fabricator is to coordinate electrical requirements, location and electrical feed with the city and designers, as well as be familier with local codes and city guidelines. Power will be provided by the city within 6 feet of the final location. Locations TBD.
Lighting Product: Color Kinetics BRAND- Fixed White LED suitable for Application Shown. Fabricator to contact Color Kinetics for recommended fixture.

NOTES
1. Fabricator to verify the mounting conditions and provide a detail drawing for each mounting situation, prior to fabrication. Fabricator must obtain approval from the Designer or Client for placement prior to fabrication.
2. Welds: All welds shall be ground smooth, paint all seams.
3. Hardware: All exposed hardware shall be tamper proof fasteners.
4. All exposed edges painted to match adjacent face.

ENVIRONMENTS & EXPERIENCES
merje
120 North Church Street
Suite 208
West Chester, PA 19380
T 484.266.0648
www.merjedesign.com

CLIENT / PROJECT
CITY OF BENTONVILLE
Bentonville, Arkansas
Wayfinding and Signage System

PROJECT NO. Y41.08062.000

SUBCONSULTANT

DATE 09/29/2014

DRAWN BY: PR

REVISIONS

SHEET TITLE
Sign Type GATE.1a
Major City Gateway
Back View

SHEET NO. **D.18**

These drawings are meant for DESIGN INTENT ONLY and are not for construction. Contractor shall verify and be responsible for all dimensions and conditions of the job. Contractor shall be familiar with the site and conditions it presents. This office must be notified of any variations from the dimensions and conditions shown on this drawing. Shop drawings and details must be submitted to this office for approval prior to proceeding with fabrication. All copy shall be proofread by client and legal requirements checked by legal department.

4 Graphic Layout: GATE.2
SCALE: 1" = 1'-0"

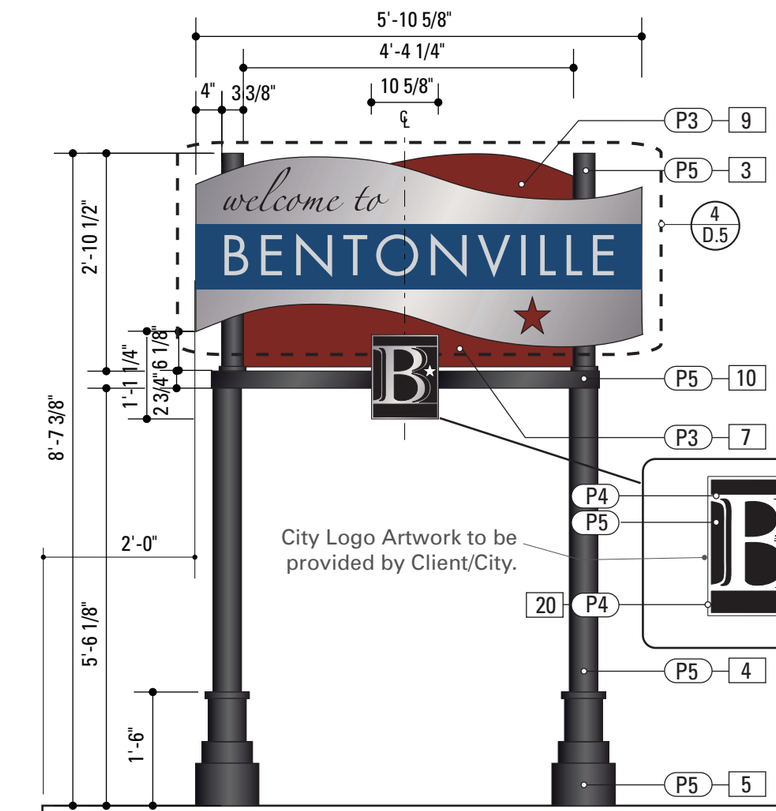

1 Front View: GATE.2
SCALE: 1/2" = 1'-0"

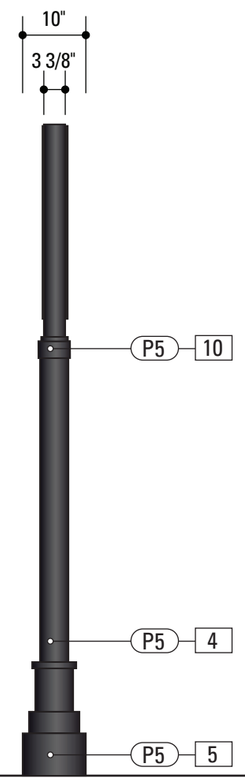

2 Side View: GATE.2
SCALE: 1/2" = 1'-0"

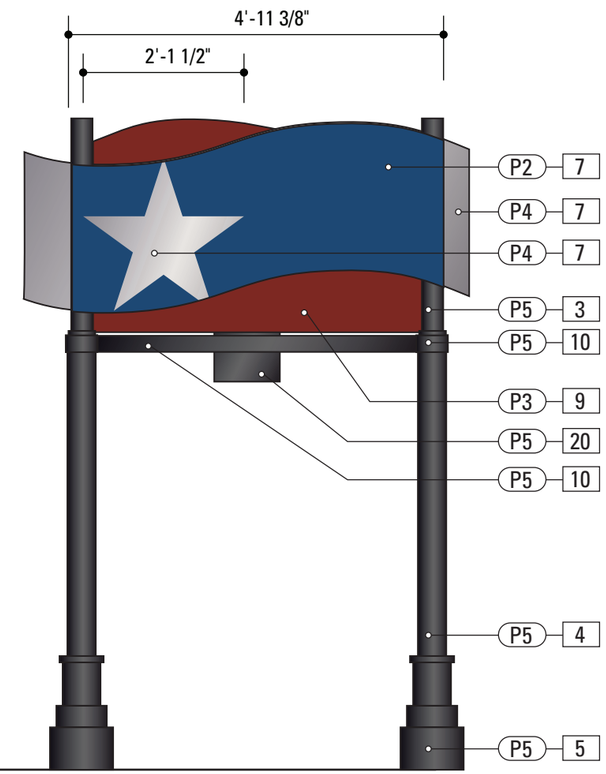

3 Back View: GATE.2
SCALE: 1/2" = 1'-0"

SPECIFICATIONS **SIGN TYPE:** GATE.2 **FUNCTION:** Secondary City Gtwy

3. UPPER POLE
POLE: 31/2" dia. 1/4" thick Aluminum
MATERIAL: Aluminum
FABRICATION PROCESS: Extruded Weld to Pole Base.
EDGES: Smooth/Top Capped
COLOR: custom, as noted
SURFACE PROCESS: paint all exposed surfaces as noted. Refer to color page for specifications
FASTENER: Weld to Lower Pole

4. LOWER POLE
POLE: 5 1/2" dia. 1/4" thick Aluminum
BASE: 6" dia. Round 1/2" thick Aluminum
MATERIAL: Aluminum
FABRICATION PROCESS: Extruded Weld to Pole Base.
EDGES: Smooth/Top Capped
COLOR: custom, as noted
SURFACE PROCESS: paint all exposed surfaces as noted. Refer to color page for specifications
FASTENER: Weld to Base CAP Assembly

5. POLE BASE
MATERIAL: 1/4" Fabricated Alum.
FABRICATION PROCESS: Cut-Weld Top
EDGES: Smooth-Grind Welds Smooth
SURFACE PROCESS: paint all exposed surfaces as noted. Refer to color page for specifications
FOOTER: TRANSPO BRAND Breakaway Footer if located within DOT Right of Way. Details to be provided by Fabricator.

7. SIGN PANEL
MATERIAL: 1/4" thk Aluminum
FABRICATION PROCESS: Contour Cut
EDGES: Point Precise Corners No overcutting or rounded corners
COLOR: custom, as noted
SURFACE PROCESS: Paint all exposed surfaces
TOPCOAT: MPC: Acrylic Polyurethane Satin MAP
CLEARCOAT: MPC: Acrylic Polyurethane 42228 MAP Clear Satin
FASTENER: Weld to bracket

Vinyl Background and/or Seperate Graphic Lettering applied to front face of Sign Panel. See Color Page for Specifications

8. CUTOUT
FABRICATION PROCESS: Stamp/Router Cut
EDGES: Point Precise Corners No overcutting or rounded corners
COLOR: None OPEN to rear panel

9. DECORATIVE SIGN PANEL
MATERIAL: 1/4" thk Aluminum
FABRICATION PROCESS: Contour Cut
EDGES: Smooth
COLOR: custom, as noted
SURFACE PROCESS: Paint all exposed surfaces as noted. Refer to color page for specifications
FASTENER: Weld to Pole Assembly

10. BASE CAP ASSEMBLY
MATERIAL: 1/4" Fabricated Alum.
FABRICATION PROCESS: Cut-Weld Top
EDGES: Smooth-Grind Welds Smooth
SURFACE PROCESS: paint all exposed surfaces as noted. Refer to color page for specifications
FASTENER: Weld to Upper Pole/Mech Fasten to Lower Pole.

20. LOGO PLAQUE
MATERIAL: 1/4" Aluminum
COLOR: Integral to match P4 Aluminum. Fill P5.
FABRICATION PROCESS: Router Cut
EDGES: Smooth-Grind Welds Smooth
SURFACE PROCESS: Recessed/Raised Graphics Paint all exposed surfaces as noted. Refer to color page for specifications
FASTENER: Mech. Fasten hidden rear to Plaque Backer. as required

Note: External Lighting Fixtures are to be provided to light the face of the sign at night. The Fabricator is to provide enough fixtures to produce an even and uniform washing of light. Light fixtures are to be UL rated and housed for external use. The Fabricator is to coordinate electrical requirements, location and electrical feed with the city and designers, as well as be familier with local codes and city guidelines. Power will be provided by the city within 6 feet of the final location. Locations TBD.
Lighting Product: Color Kinetics BRAND- Fixed White LED suitable for Application Shown. Fabricator to contact Color Kinetics for recommended fixture.

NOTES
1. Fabricator to verify the mounting conditions and provide a detail drawing for each mounting situation, prior to fabrication. Fabricator must obtain approval from the Designer or Client for placement prior to fabrication.
2. Welds: All welds shall be ground smooth, paint all seams.
3. Hardware: All exposed hardware shall be tamper proof fasteners.
4. All exposed edges painted to match adjacent face.

ENVIRONMENTS & EXPERIENCES
merje
120 North Church Street
Suite 208
West Chester, PA 19380
T 484.266.0648
www.merjedesign.com

CLIENT / PROJECT
CITY OF BENTONVILLE
Bentonville, Arkansas
Wayfinding and Signage System

PROJECT NO. Y41.08062.000

SUBCONSULTANT

DATE 09/29/2014

DRAWN BY: PR

REVISIONS

SHEET TITLE
Sign Type GATE.1
Secondary City Gateway

SHEET NO.
D.19

These drawings are meant for DESIGN INTENT ONLY and are not for construction. Contractor shall verify and be responsible for all dimensions and conditions of the job. Contractor shall be familiar with the site and conditions it presents. This office must be notified of any variations from the dimensions and conditions shown on this drawing. Shop drawings and details must be submitted to this office for approval prior to proceeding with fabrication. All copy shall be proofread by client and legal requirements checked by legal department.

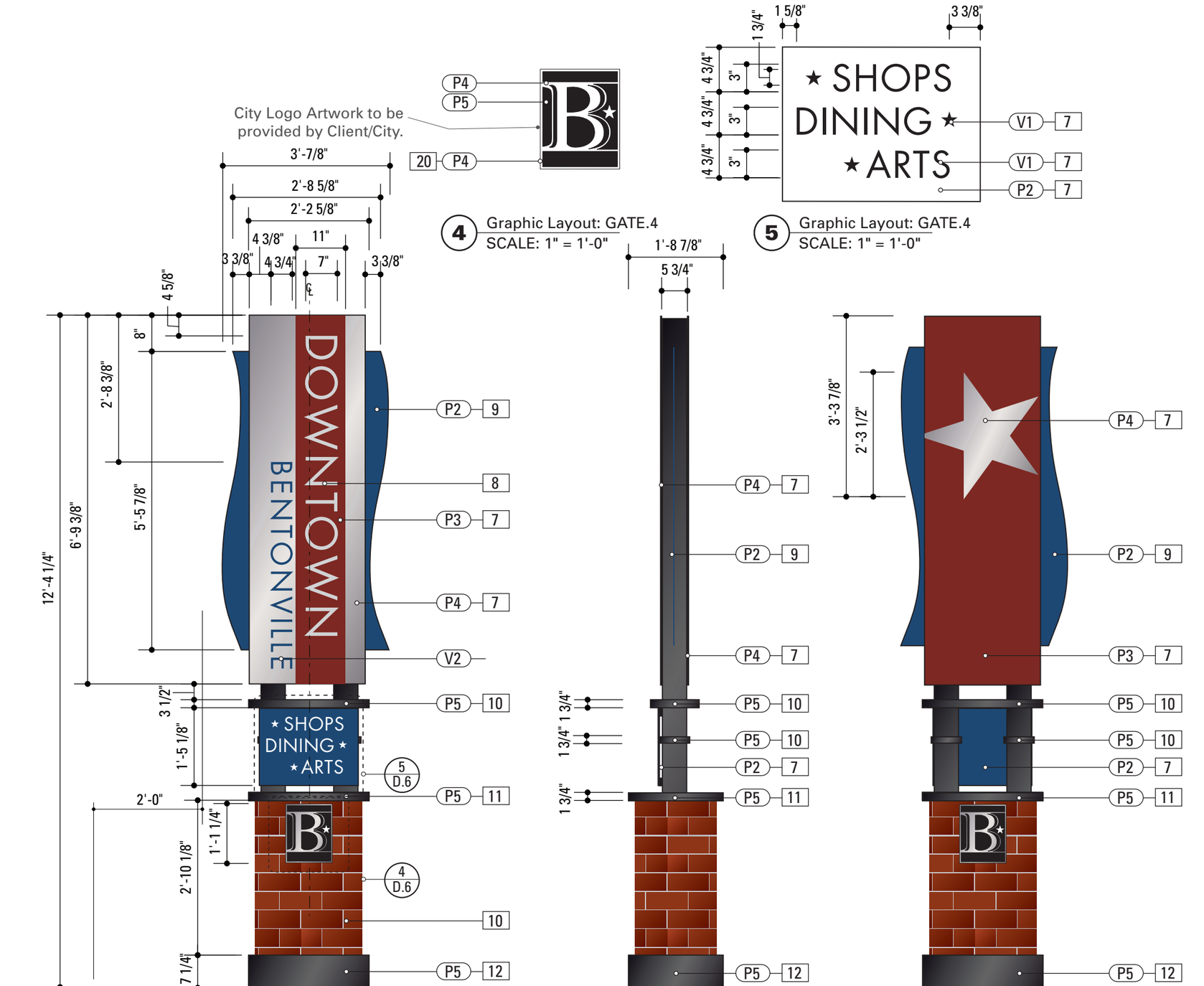

4 Graphic Layout: GATE.4
SCALE: 1" = 1'-0"

5 Graphic Layout: GATE.4
SCALE: 1" = 1'-0"

1 Front View: GATE.4
SCALE: 1/2" = 1'-0"

2 Side View: GATE.4
SCALE: 1/2" = 1'-0"

3 Back View: GATE.4
SCALE: 1/2" = 1'-0"

SPECIFICATIONS **SIGN TYPE:** GATE.4 **FUNCTION:** Downtown Gateway

4. POLE
POLE: 5 1/2" dia. 1/4" thick Aluminum
BASE: 6" dia. Round 1/2" thick Aluminum
MATERIAL: Aluminum
FABRICATION PROCESS: Extruded Weld to Pole Base.
EDGES: Smooth/Top Capped
COLOR: custom, as noted
SURFACE PROCESS: paint all exposed surfaces as noted. Refer to color page for specifications
FASTENER: Weld to Base CAP Assembly

7. SIGN PANEL
MATERIAL: 1/4" thk Aluminum
FABRICATION PROCESS: Contour Cut
EDGES: Point Precise Corners No overcutting or rounded corners
COLOR: custom, as noted
SURFACE PROCESS: Paint all exposed surfaces
TOPCOAT: MPC: Acrylic Polyurethane Satin MAP
CLEARCOAT: MPC: Acrylic Polyurethane 42228 MAP Clear Satin
FASTENER: Weld to bracket

Vinyl Background and/or Seperate Graphic Lettering applied to front face of Sign Panel. See Color Page for Specifications

8. CUTOUT
FABRICATION PROCESS: Stamp/Router Cut
EDGES: Point Precise Corners No overcutting or rounded corners
COLOR: None OPEN to rear panel

9. DECORATIVE SIGN PANEL
MATERIAL: 1/4" thk Aluminum
FABRICATION PROCESS: Contour Cut
EDGES: Smooth
COLOR: custom, as noted
SURFACE PROCESS: Paint all exposed surfaces as noted. Refer to color page for specifications
FASTENER: Weld to Pole Assembly

10. BRICK BASE
MATERIAL: BRICK
PROCESS: Veneer
MATCH: Downtown Square Pavers.
SAMPLE: City to provide specification
FASTENER: Morter to Internal CMU Structure.
FOOTER: TRANSPO BRAND Breakaway Footer if located within DOT Right of Way. Ref Footer Section for Details. Fabrication Details to be provided by Fabricator for DOT approval.

11. BASE CAP ASSEMBLY
MATERIAL: 1/4" Fabricated Alum.
FABRICATION PROCESS: Cut-Weld Top
EDGES: Smooth-Grind Welds Smooth
SURFACE PROCESS: paint all exposed surfaces as noted. Refer to color page for specifications
FASTENER: Mech. Fasten to Brick Base/ Pole

12. BASE
MATERIAL: 1/4" Fabricated Alum.
FABRICATION PROCESS: Cut-Weld Top
EDGES: Smooth-Grind Welds Smooth
SURFACE PROCESS: paint all exposed surfaces as noted. Refer to color page for specifications
FASTENER: Mech. Fasten to Brick Base Conceals Footer Detail.

20. LOGO PLAQUE
MATERIAL: 1/4" Aluminum
COLOR: Integral to match P4 Aluminum. Fill P5.
FABRICATION PROCESS: Router Cut
EDGES: Smooth-Grind Welds Smooth
SURFACE PROCESS: Recessed/Raised Graphics Paint all exposed surfaces as noted. Refer to color page for specifications
FASTENER: Mech. Fasten hidden rear to Plaque Backer. as required

Note: External Lighting Fixtures are to be provided to light the face of the sign at night. The Fabricator is to provide enough fixtures to produce an even and uniform washing of light. Light fixtures are to be UL rated and housed for external use. The Fabricator is to coordinate electrical requirements, location and electrical feed with the city and designers, as well as be familier with local codes and city guidelines. Power will be provided by the city within 6 feet of the final location. Locations TBD.
Lighting Product: Color Kinetics BRAND- Fixed White LED suitable for Application Shown. Fabricator to contact Color Kinetics for recommended fixture.

NOTES
1. Fabricator to verify the mounting conditions and provide a detail drawing for each mounting situation, prior to fabrication. Fabricator must obtain approval from the Designer or Client for placement prior to fabrication.
2. Welds: All welds shall be ground smooth, paint all seams.
3. Hardware: All exposed hardware shall be tamper proof fasteners.
4. All exposed edges painted to match adjacent face.

ENVIRONMENTS & EXPERIENCES
merje
120 North Church Street
Suite 208
West Chester, PA 19380
T 484.266.0648
www.merjedesign.com

CLIENT / PROJECT
CITY OF BENTONVILLE
Bentonville, Arkansas
Wayfinding and Signage System

PROJECT NO. Y41.08062.000

SUBCONSULTANT

DATE 09/29/2014

DRAWN BY: PR

REVISIONS

SHEET TITLE
Sign Type GATE.4
Downtown Gateway

SHEET NO.
D.20

These drawings are meant for DESIGN INTENT ONLY and are not for construction. Contractor shall verify and be responsible for all dimensions and conditions of the job. Contractor shall be familiar with the site and conditions it presents. This office must be notified of any variations from the dimensions and conditions shown on this drawing. Shop drawings and details must be submitted to this office for approval prior to proceeding with fabrication. All copy shall be proofread by client and legal requirements checked by legal department.

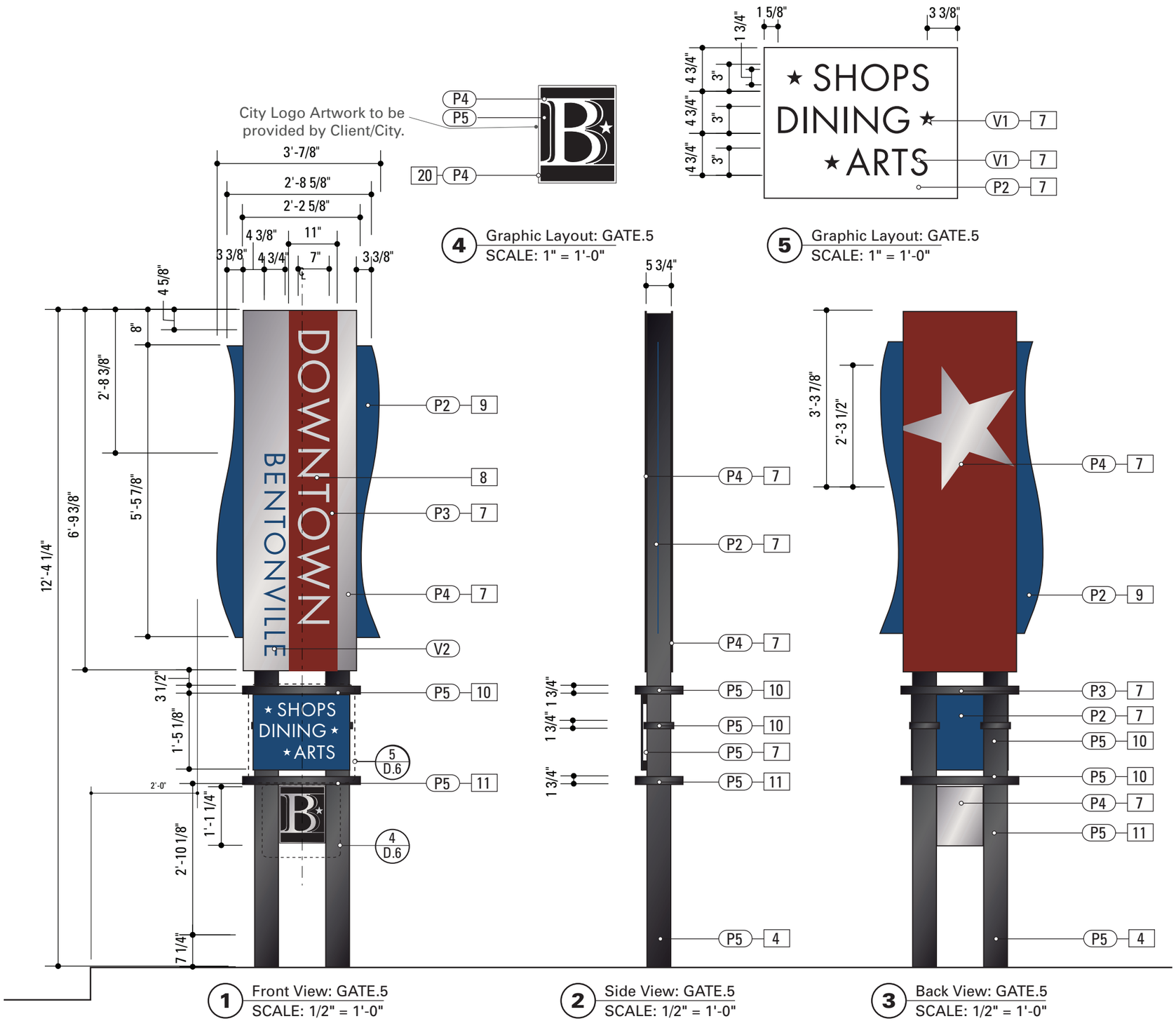

SPECIFICATIONS **SIGN TYPE:** GATE.5 **FUNCTION:** Downtown Gateway

3. UPPER POLE
POLE: 31/2" dia. 1/4" thick Aluminum
MATERIAL: Aluminum
FABRICATION PROCESS: Extruded Weld to Pole Base.
EDGES: Smooth/Top Capped
COLOR: custom, as noted
SURFACE PROCESS: paint all exposed surfaces as noted. Refer to color page for specifications
FASTENER: Weld to Lower Pole

4. LOWER POLE
POLE: 5 1/2" dia. 1/4" thick Aluminum
BASE: 6" dia. Round 1/2" thick Aluminum
MATERIAL: Aluminum
FABRICATION PROCESS: Extruded Weld to Pole Base.
EDGES: Smooth/Top Capped
COLOR: custom, as noted
SURFACE PROCESS: paint all exposed surfaces as noted. Refer to color page for specifications
FASTENER: Weld to Base CAP Assembly

5. POLE BASE
MATERIAL: 1/4" Fabricated Alum.
FABRICATION PROCESS: Cut-Weld Top
EDGES: Smooth-Grind Welds Smooth
SURFACE PROCESS: paint all exposed surfaces as noted. Refer to color page for specifications
FOOTER: TRANSPO BRAND Breakaway Footer if located within DOT Right of Way. Details to be provided by Fabricator.

7. SIGN PANEL
MATERIAL: 1/4" thk Aluminum
FABRICATION PROCESS: Contour Cut
EDGES: Point Precise Corners No overcutting or rounded corners
COLOR: custom, as noted
SURFACE PROCESS: Paint all exposed surfaces
TOPCOAT: MPC: Acrylic Polyurethane Satin MAP
CLEARCOAT: MPC: Acrylic Polyurethane 42228 MAP Clear Satin
FASTENER: Weld to bracket

Vinyl Background and/or Seperate Graphic Lettering applied to front face of Sign Panel. See Color Page for Specifications

8. CUTOUT
FABRICATION PROCESS: Stamp/Router Cut
EDGES: Point Precise Corners No overcutting or rounded corners
COLOR: None OPEN to rear panel

9. DECORATIVE SIGN PANEL
MATERIAL: 1/4" thk Aluminum
FABRICATION PROCESS: Contour Cut
EDGES: Smooth
COLOR: custom, as noted
SURFACE PROCESS: Paint all exposed surfaces as noted. Refer to color page for specifications
FASTENER: Weld to Pole Assembly

10. BASE CAP ASSEMBLY
MATERIAL: 1/4" Fabricated Alum.
FABRICATION PROCESS: Cut-Weld Top
EDGES: Smooth-Grind Welds Smooth
SURFACE PROCESS: paint all exposed surfaces as noted. Refer to color page for specifications
FASTENER: Weld to Upper Pole/Mech Fasten to Lower Pole.

20. LOGO PLAQUE
MATERIAL: 1/4" Aluminum
COLOR: Integral to match P4 Aluminum. Fill P5.
FABRICATION PROCESS: Router Cut
EDGES: Smooth-Grind Welds Smooth
SURFACE PROCESS: Recessed/Raised Graphics Paint all exposed surfaces as noted. Refer to color page for specifications
FASTENER: Mech. Fasten hidden rear to Plaque Backer. as required

Note: External Lighting Fixtures are to be provided to light the face of the sign at night. The Fabricator is to provide enough fixtures to produce an even and uniform washing of light. Light fixtures are to be UL rated and housed for external use. The Fabricator is to coordinate electrical requirements, location and electrical feed with the city and designers, as well as be familier with local codes and city guidelines. Power will be provided by the city within 6 feet of the final location. Locations TBD.
Lighting Product: Color Kinetics BRAND- Fixed White LED suitable for Application Shown. Fabricator to contact Color Kinetics for recommended fixture.

NOTES

1. Fabricator to verify the mounting conditions and provide a detail drawing for each mounting situation, prior to fabrication. Fabricator must obtain approval from the Designer or Client for placement prior to fabrication.
2. Welds: All welds shall be ground smooth, paint all seams.
3. Hardware: All exposed hardware shall be tamper proof fasteners.
4. All exposed edges painted to match adjacent face.

ENVIRONMENTS & EXPERIENCES
merje
120 North Church Street
Suite 208
West Chester, PA 19380
T 484.266.0648
www.merjedesign.com

CLIENT / PROJECT
CITY OF BENTONVILLE
Bentonville, Arkansas
Wayfinding and Signage System

PROJECT NO. Y41.08062.000

SUBCONSULTANT

DATE 09/29/2014

DRAWN BY: PR

REVISIONS

SHEET TITLE
Sign Type GATE.5
Downtown Gateway

SHEET NO.
D.21

These drawings are meant for DESIGN INTENT ONLY and are not for construction. Contractor shall verify and be responsible for all dimensions and conditions of the job. Contractor shall be familiar with the site and conditions it presents. This office must be notified of any variations from the dimensions and conditions shown on this drawing. Shop drawings and details must be submitted to this office for approval prior to proceeding with fabrication. All copy shall be proofread by client and legal requirements checked by legal department.

E | Graphic Layouts

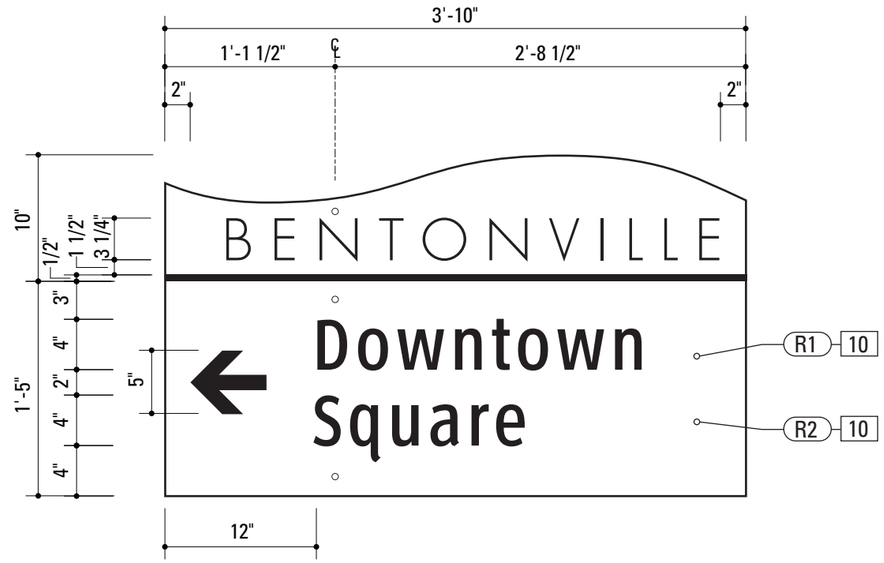

1 IDENTITY/MESSAGE PANEL LAYOUT: VDIR.1-3
SCALE: 1" = 1'-0"

2 MESSAGE PANEL LAYOUT: VDIR.1-3
SCALE: 1" = 1'-0"

3 MESSAGE PANEL LAYOUT: VDIR.1-3
SCALE: 1" = 1'-0"

SPECIFICATIONS

SIGN PANEL LAYOUTS: VDIR.1–3

NOTES:
- Messages shown are NOT actual messages. Provided for illustrative purposes only.
- Refer to message schedule for actual sign messages.
- Panel layouts for ALL sign locations shall be included in shop drawings for review by designer and client.

NOTES:
1. Fabricator to verify the mounting conditions and provide a detail drawing for each mounting situation, prior to fabrication. Fabricator must obtain approval from the Designer or Client for placement prior to fabrication.
2. Welds: All welds shall be ground smooth, paint all seams.
3. Hardware: All exposed hardware shall be tamper proof fasteners.
4. All exposed edges painted to match adjacent face.

ENVIRONMENTS & EXPERIENCES

merje

120 North Church Street
Suite 208
West Chester, PA 19380
T 484.266.0648
www.merjedesign.com

DATE 09/29/2014

DRAWN BY: PR

These drawings are meant for DESIGN INTENT ONLY and are not for construction. Contractor shall verify and be responsible for all dimensions and conditions of the job. Contractor shall be familiar with the site and conditions it presents. This office must be notified of any variations from the dimensions and conditions shown on this drawing. Shop drawings and details must be submitted to this office for approval prior to proceeding with fabrication. All copy shall be proofread by client and legal requirements checked by legal department.

REVISIONS

CLIENT / PROJECT

CITY OF BENTONVILLE
Bentonville, Arkansas
Wayfinding and Signage System

PROJECT NO. Y41.08062.000

SHEET TITLE

VDIR.1-3
Layout Drawings

SHEET NO.

E.1

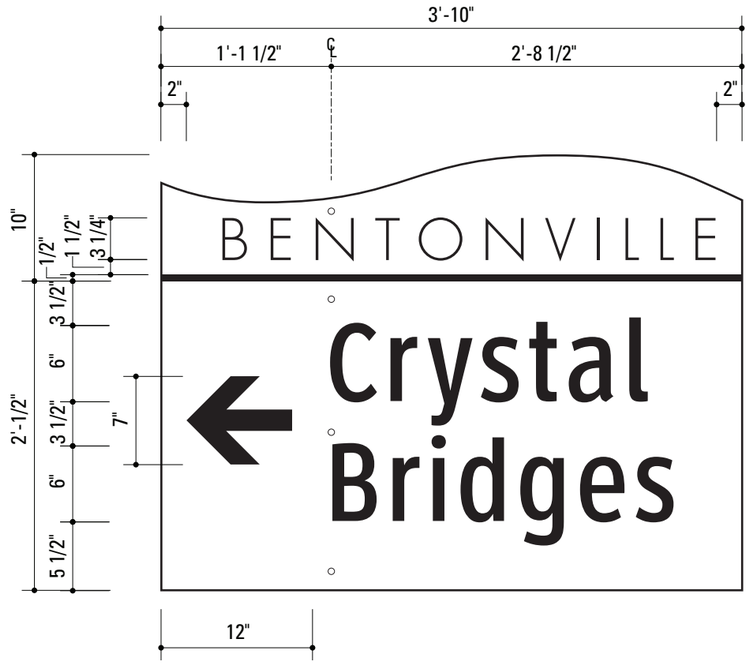

1 IDENTITY/MESSAGE PANEL LAYOUT: VDIR.3ALT
SCALE: 1" = 1'-0"

2 IDENTITY/MESSAGE PANEL LAYOUT: VDIR.3ALT
SCALE: 1" = 1'-0"

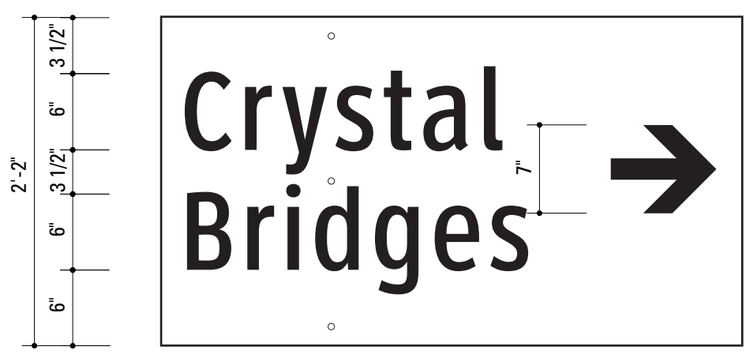

3 MESSAGE PANEL LAYOUT: VDIR.3ALT
SCALE: 1" = 1'-0"

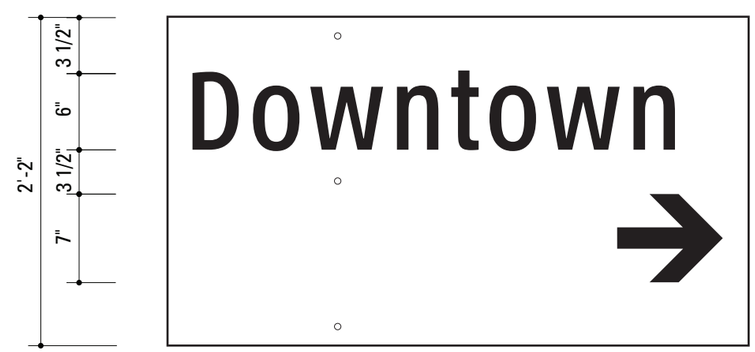

4 MESSAGE PANEL LAYOUT: VDIR.3ALT
SCALE: 1" = 1'-0"

SPECIFICATIONS

SIGN PANEL LAYOUTS: VDIR.3 ALT

NOTES:
- Messages shown are NOT actual messages. Provided for illustrative purposes only.
- Refer to message schedule for actual sign messages.
- Panel layouts for ALL sign locations shall be included in shop drawings for review by designer and client.

NOTES:
1. Fabricator to verify the mounting conditions and provide a detail drawing for each mounting situation, prior to fabrication. Fabricator must obtain approval from the Designer or Client for placement prior to fabrication.
2. Welds: All welds shall be ground smooth, paint all seams.
3. Hardware: All exposed hardware shall be tamper proof fasteners.
4. All exposed edges painted to match adjacent face.

ENVIRONMENTS & EXPERIENCES

merje

120 North Church Street
Suite 208
West Chester, PA 19380
T 484.266.0648
www.merjedesign.com

DATE 09/29/2014

DRAWN BY: PR

These drawings are meant for DESIGN INTENT ONLY and are not for construction. Contractor shall verify and be responsible for all dimensions and conditions of the job. Contractor shall be familiar with the site and conditions it presents. This office must be notified of any variations from the dimensions and conditions shown on this drawing. Shop drawings and details must be submitted to this office for approval prior to proceeding with fabrication. All copy shall be proofread by client and legal requirements checked by legal department.

REVISIONS

CLIENT / PROJECT

CITY OF BENTONVILLE
Bentonville, Arkansas
Wayfinding and Signage System

PROJECT NO. Y41.08062.000

SHEET TITLE

VDIR.3 ALT
Layout Drawings

SHEET NO.

E.2

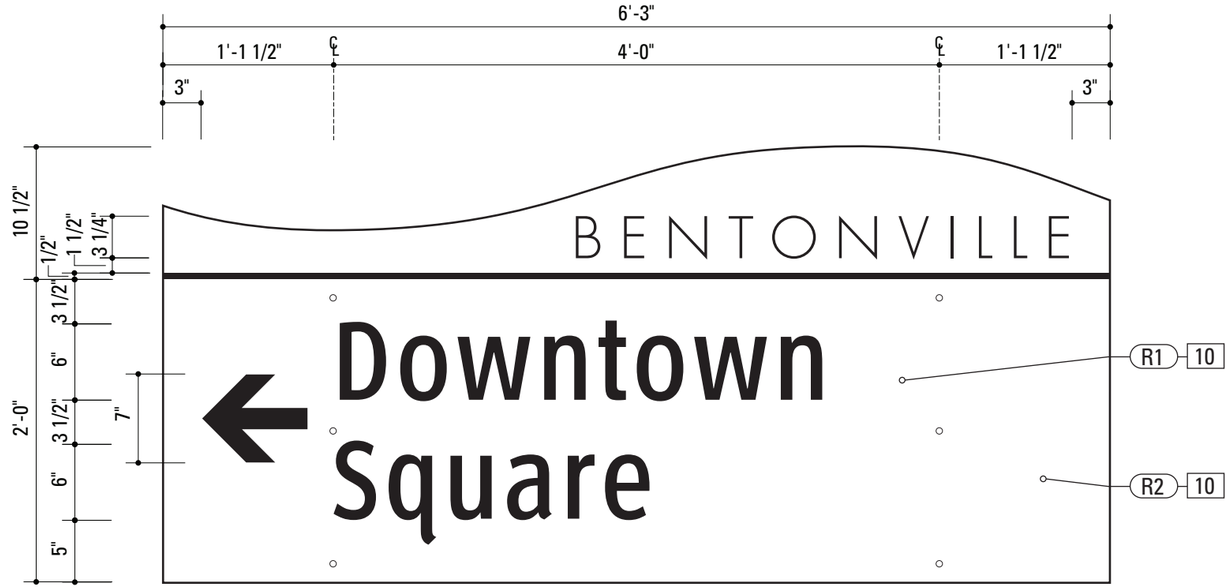

1 IDENTITY/MESSAGE PANEL LAYOUT: VDIR.4-6
SCALE: 1" = 1'-0"

2 MESSAGE PANEL LAYOUT: VDIR.4-6
SCALE: 1" = 1'-0"

3 MESSAGE PANEL LAYOUT: VDIR.4-6
SCALE: 1" = 1'-0"

SPECIFICATIONS

SIGN PANEL LAYOUTS: VDIR.4–6

NOTES:
- Messages shown are NOT actual messages. Provided for illustrative purposes only.
- Refer to message schedule for actual sign messages.
- Panel layouts for ALL sign locations shall be included in shop drawings for review by designer and client.

NOTES:
1. Fabricator to verify the mounting conditions and provide a detail drawing for each mounting situation, prior to fabrication. Fabricator must obtain approval from the Designer or Client for placement prior to fabrication.
2. Welds: All welds shall be ground smooth, paint all seams.
3. Hardware: All exposed hardware shall be tamper proof fasteners.
4. All exposed edges painted to match adjacent face.

ENVIRONMENTS & EXPERIENCES

merje

120 North Church Street
Suite 208
West Chester, PA 19380
T 484.266.0648
www.merjedesign.com

DATE 09/29/2014

DRAWN BY: PR

These drawings are meant for DESIGN INTENT ONLY and are not for construction. Contractor shall verify and be responsible for all dimensions and conditions of the job. Contractor shall be familiar with the site and conditions it presents. This office must be notified of any variations from the dimensions and conditions shown on this drawing. Shop drawings and details must be submitted to this office for approval prior to proceeding with fabrication. All copy shall be proofread by client and legal requirements checked by legal department.

REVISIONS

CLIENT / PROJECT

CITY OF BENTONVILLE
Bentonville, Arkansas
Wayfinding and Signage System

PROJECT NO. Y41.08062.000

SHEET TITLE

VDIR.4–6
Layout Drawings

SHEET NO.

E.3

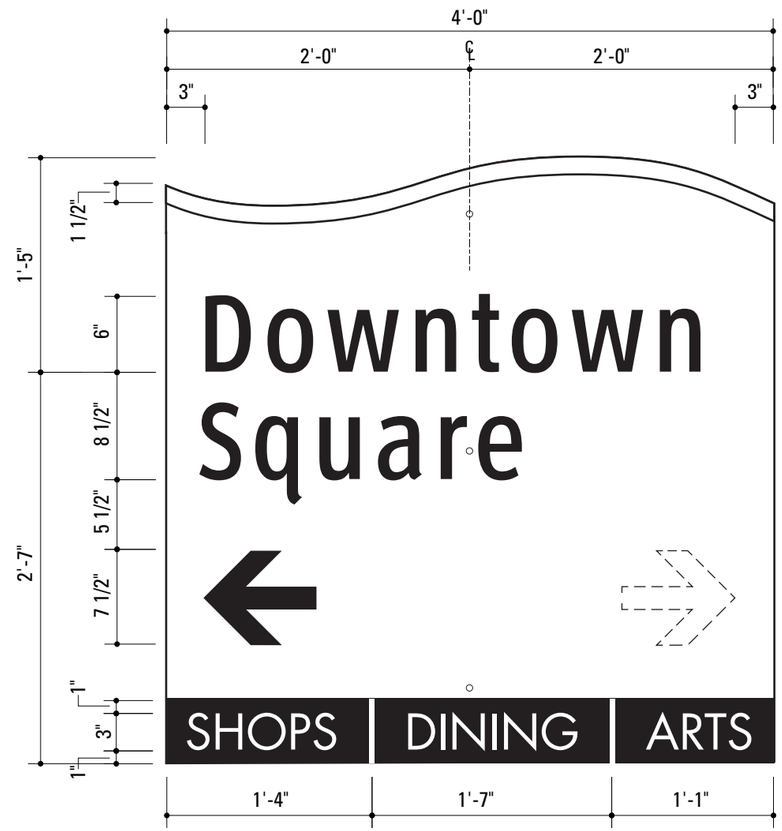

1 MESSAGE PANEL LAYOUT: TRAIL.1
SCALE: 1" = 1'-0"

SPECIFICATIONS

SIGN PANEL LAYOUTS: TRAIL.1

NOTES:
- Messages shown are NOT actual messages. Provided for illustrative purposes only.
- Refer to message schedule for actual sign messages.
- Panel layouts for ALL sign locations shall be included in shop drawings for review by designer and client.

NOTES:
1. Fabricator to verify the mounting conditions and provide a detail drawing for each mounting situation, prior to fabrication. Fabricator must obtain approval from the Designer or Client for placement prior to fabrication.
2. Welds: All welds shall be ground smooth, paint all seams.
3. Hardware: All exposed hardware shall be tamper proof fasteners.
4. All exposed edges painted to match adjacent face.

ENVIRONMENTS & EXPERIENCES
merje
120 North Church Street
Suite 208
West Chester, PA 19380
T 484.266.0648
www.merjedesign.com

DATE 09/29/2014

DRAWN BY: PR

These drawings are meant for DESIGN INTENT ONLY and are not for construction. Contractor shall verify and be responsible for all dimensions and conditions of the job. Contractor shall be familiar with the site and conditions it presents. This office must be notified of any variations from the dimensions and conditions shown on this drawing. Shop drawings and details must be submitted to this office for approval prior to proceeding with fabrication. All copy shall be proofread by client and legal requirements checked by legal department.

REVISIONS

CLIENT / PROJECT
CITY OF BENTONVILLE
Bentonville, Arkansas
Wayfinding and Signage System

PROJECT NO. Y41.08062.000

SHEET TITLE
TRAIL.1
Layout Drawings

SHEET NO.
E.4

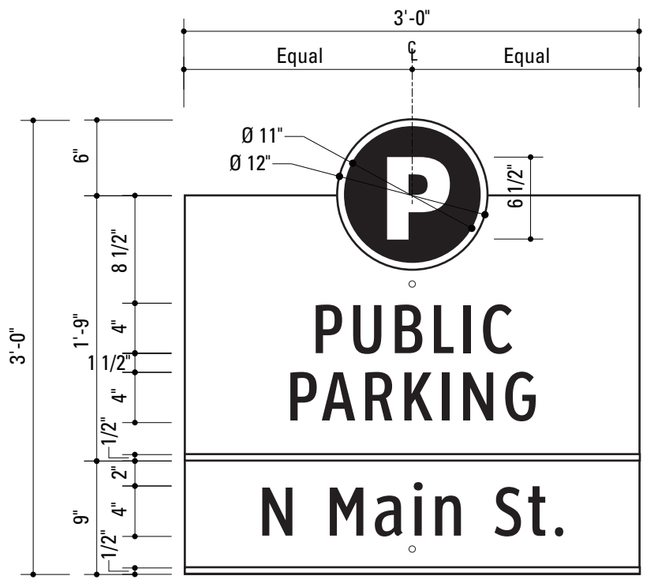

1 MESSAGE PANEL LAYOUT: PARK.1
SCALE: 1" = 1'-0"

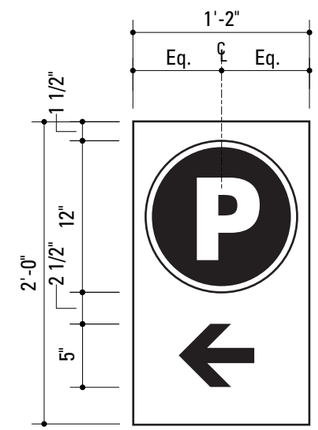

2 MESSAGE PANEL LAYOUT: PARK.2
SCALE: 1" = 1'-0"

SPECIFICATIONS

SIGN PANEL LAYOUTS: PARK.1–2

NOTES:
- Messages shown are NOT actual messages. Provided for illustrative purposes only.
- Refer to message schedule for actual sign messages.
- Panel layouts for ALL sign locations shall be included in shop drawings for review by designer and client.

NOTES:
1. Fabricator to verify the mounting conditions and provide a detail drawing for each mounting situation, prior to fabrication. Fabricator must obtain approval from the Designer or Client for placement prior to fabrication.
2. Welds: All welds shall be ground smooth, paint all seams.
3. Hardware: All exposed hardware shall be tamper proof fasteners.
4. All exposed edges painted to match adjacent face.

ENVIRONMENTS & EXPERIENCES
merje
120 North Church Street
Suite 208
West Chester, PA 19380
T 484.266.0648
www.merjedesign.com

DATE 09/29/2014

DRAWN BY: PR

These drawings are meant for DESIGN INTENT ONLY and are not for construction. Contractor shall verify and be responsible for all dimensions and conditions of the job. Contractor shall be familiar with the site and conditions it presents. This office must be notified of any variations from the dimensions and conditions shown on this drawing. Shop drawings and details must be submitted to this office for approval prior to proceeding with fabrication. All copy shall be proofread by client and legal requirements checked by legal department.

REVISIONS

CLIENT / PROJECT

CITY OF BENTONVILLE
Bentonville, Arkansas
Wayfinding and Signage System

PROJECT NO. Y41.08062.000

SHEET TITLE

PARK.1-2
Layout Drawings

SHEET NO.

E.5

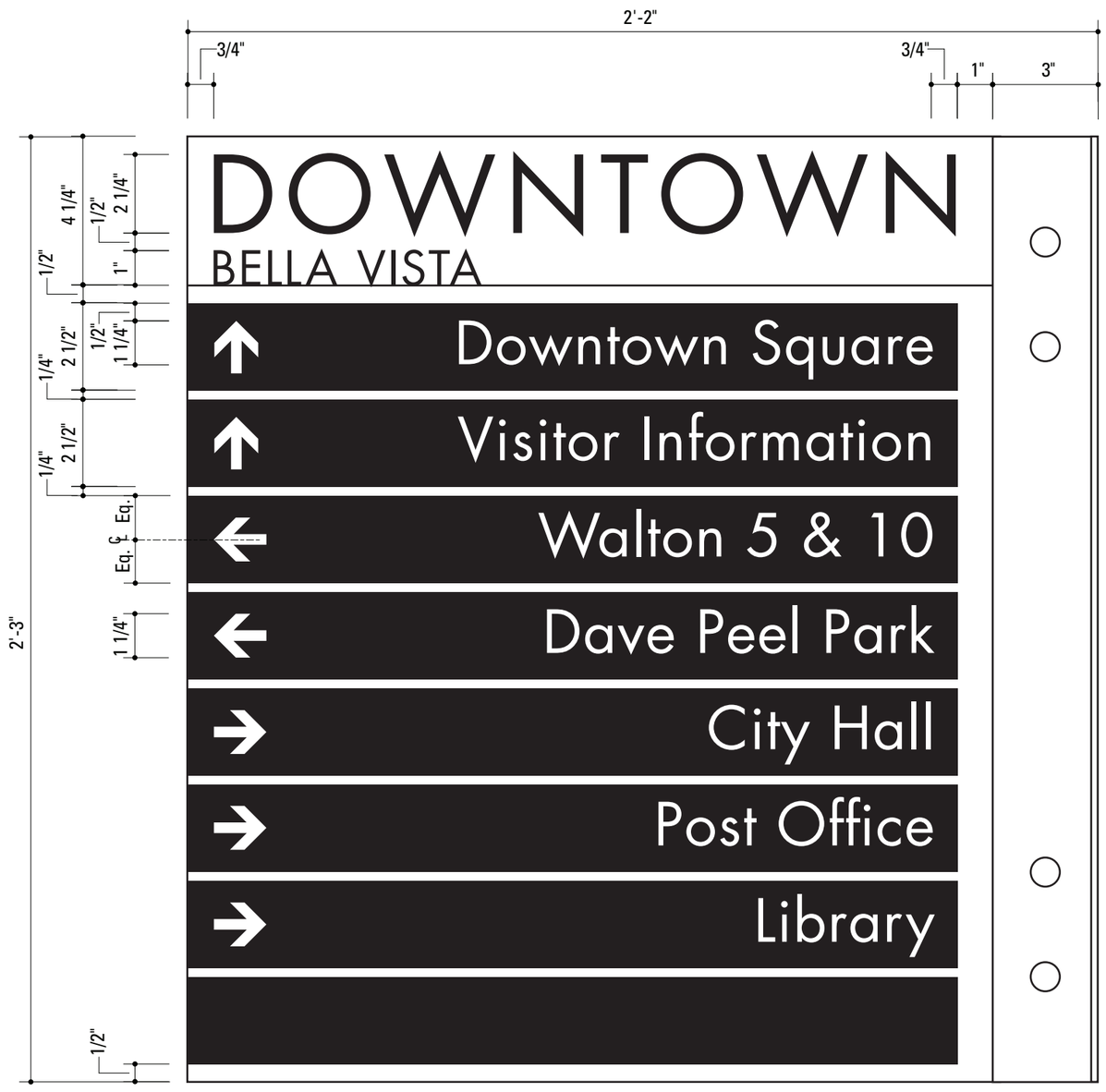

1 MESSAGE PANEL LAYOUT–**SIDE B**: PDIR.1–2
SCALE: 3" = 1'-0"

2 MESSAGE PANEL LAYOUT–
SIDE A: PDIR.1–2
SCALE: 3" = 1'-0"

SPECIFICATIONS

SIGN PANEL LAYOUTS: PDIR.1–2

NOTES:
- Messages shown are NOT actual messages. Provided for illustrative purposes only.
- Refer to message schedule for actual sign messages.
- Panel layouts for ALL sign locations shall be included in shop drawings for review by designer and client.

NOTES:
1. Fabricator to verify the mounting conditions and provide a detail drawing for each mounting situation, prior to fabrication. Fabricator must obtain approval from the Designer or Client for placement prior to fabrication.
2. Welds: All welds shall be ground smooth, paint all seams.
3. Hardware: All exposed hardware shall be tamper proof fasteners.
4. All exposed edges painted to match adjacent face.

ENVIRONMENTS & EXPERIENCES
merje
120 North Church Street
Suite 208
West Chester, PA 19380
T 484.266.0648
www.merjedesign.com

DATE 09/29/2014

DRAWN BY: PR

These drawings are meant for DESIGN INTENT ONLY and are not for construction. Contractor shall verify and be responsible for all dimensions and conditions of the job. Contractor shall be familiar with the site and conditions it presents. This office must be notified of any variations from the dimensions and conditions shown on this drawing. Shop drawings and details must be submitted to this office for approval prior to proceeding with fabrication. All copy shall be proofread by client and legal requirements checked by legal department.

REVISIONS

CLIENT / PROJECT
CITY OF BENTONVILLE
Bentonville, Arkansas
Wayfinding and Signage System

PROJECT NO. Y41.08062.000

SHEET TITLE
PDIR.1-2
Layout Drawings

SHEET NO.
E.6

F | Construction Details

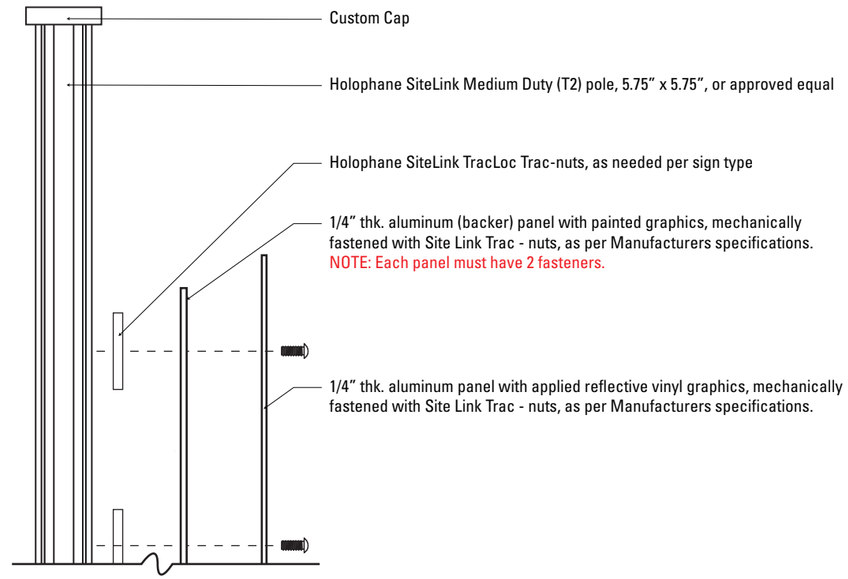

1 Detail: Exploded View
SCALE: 1 1/2" = 1"

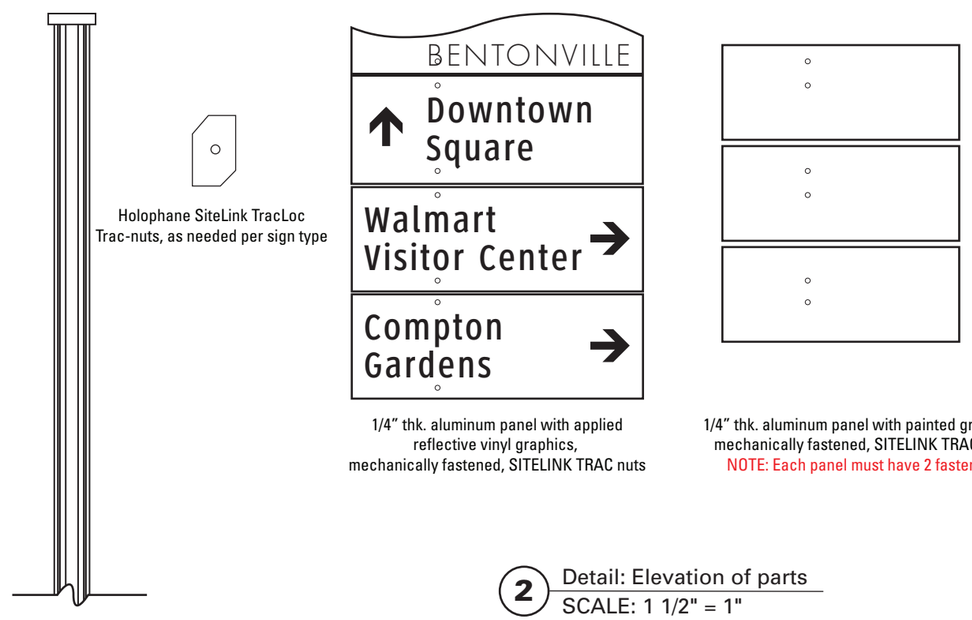

2 Detail: Elevation of parts
SCALE: 1 1/2" = 1"

SPECIFICATIONS

SiteLink TracLoc System
For sign types:
VDIR.1-3
VDIR.3ALT
PARK.1
PDIR.2

NOTE: Refer to sheet G.2 for more details.

NOTES:
1. Fabricator to verify the mounting conditions and provide a detail drawing for each mounting situation, prior to fabrication. Fabricator must obtain approval from the Designer or Client for placement prior to fabrication.
2. Welds: All welds shall be ground smooth, paint all seams.
3. Hardware: All exposed hardware shall be tamper proof fasteners.
4. All exposed edges painted to match adjacent face.

ENVIRONMENTS & EXPERIENCES
merje
120 North Church Street
Suite 208
West Chester, PA 19380
T 484.266.0648
www.merjedesign.com

DATE 09/29/2014

DRAWN BY: PR

These drawings are meant for DESIGN INTENT ONLY and are not for construction. Contractor shall verify and be responsible for all dimensions and conditions of the job. Contractor shall be familiar with the site and conditions it presents. This office must be notified of any variations from the dimensions and conditions shown on this drawing. Shop drawings and details must be submitted to this office for approval prior to proceeding with fabrication. All copy shall be proofread by client and legal requirements checked by legal department.

REVISIONS

CLIENT / PROJECT
CITY OF BENTONVILLE
Bentonville, Arkansas
Wayfinding and Signage System

PROJECT NO. Y41.08062.000

SHEET TITLE
SiteLink TracLoc Construction Details

SHEET NO.
F.1

the system

product

TracLoc System

This system provides flexibility and adaptability with an infinite ability to adjust continuously for present and future needs.

Need to move an existing attachment? Not a problem. Need to add an attachment in the future? Not a problem with the TracLoc System.

The TracLoc System lets you plan for tomorrow's needs today.

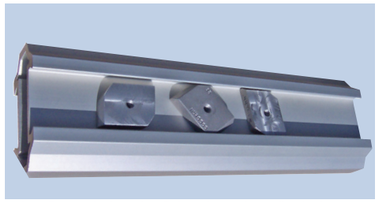

Unique TracNut is shaped to fit into the track on all pole sizes.

How it works

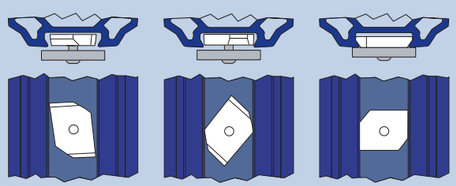

Place TracNut lengthwise in track and slide TracNut to desired position.

Rotate TracNut 90° to engage flanges of track.

TracNut is now in position. Tighten bolt to pull TracNut out against track flange.

sitelink by HOLOPHANE

HSCapes® HOLOPHANE outdoor lighting

TracBases

SiteLink works with a variety of existing complementary base styles ranging from historical to contemporary in architectural style.

Simple two piece construction for easy installation and maintenance.

The current standard base styles that are adaptable and available with SiteLink are as follows:

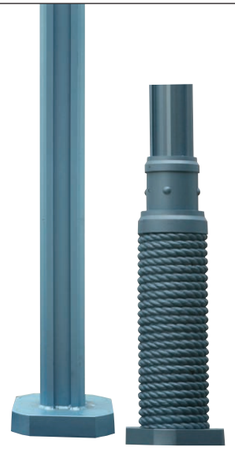

Easy two piece installation

cast aluminum

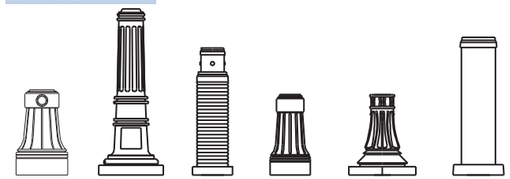

Atlanta *Bradford* *Nautical Rope Base* *Portland* *Princeton* *Smooth Round*

cast iron

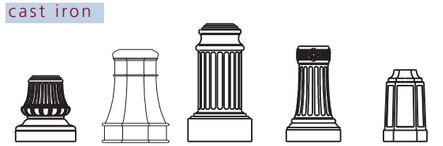

Columbia *Embarcadaro* *Hamilton* *North Yorkshire* *San Francisco*

cast aluminum and cast iron

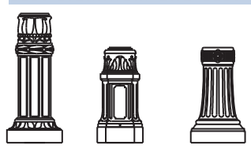

Chesapeake *Denver Federal* *North Yorkshire*

collar transitions

Standard *Extended*

dovetails

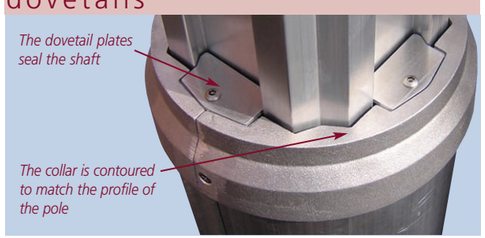

SPECIFICATIONS

SiteLink TracLoc System
For sign types:
VDIR.1-3
VDIR.3ALT
PARK.1
PDIR.2

NOTE: Refer to sheet G.1 for drawing details.

NOTES:
1. Fabricator to verify the mounting conditions and provide a detail drawing for each mounting situation, prior to fabrication. Fabricator must obtain approval from the Designer or Client for placement prior to fabrication.
2. Welds: All welds shall be ground smooth, paint all seams.
3. Hardware: All exposed hardware shall be tamper proof fasteners.
4. All exposed edges painted to match adjacent face.

ENVIRONMENTS & EXPERIENCES
merje
120 North Church Street
Suite 208
West Chester, PA 19380
T 484.266.0648
www.merjedesign.com

DATE 09/29/2014

DRAWN BY: PR

These drawings are meant for DESIGN INTENT ONLY and are not for construction. Contractor shall verify and be responsible for all dimensions and conditions of the job. Contractor shall be familiar with the site and conditions it presents. This office must be notified of any variations from the dimensions and conditions shown on this drawing. Shop drawings and details must be submitted to this office for approval prior to proceeding with fabrication. All copy shall be proofread by client and legal requirements checked by legal department.

REVISIONS

CLIENT / PROJECT
CITY OF BENTONVILLE
Bentonville, Arkansas
Wayfinding and Signage System

PROJECT NO. Y41.08062.000

SHEET TITLE
SiteLink TracLoc Construction Details

SHEET NO.
F.2

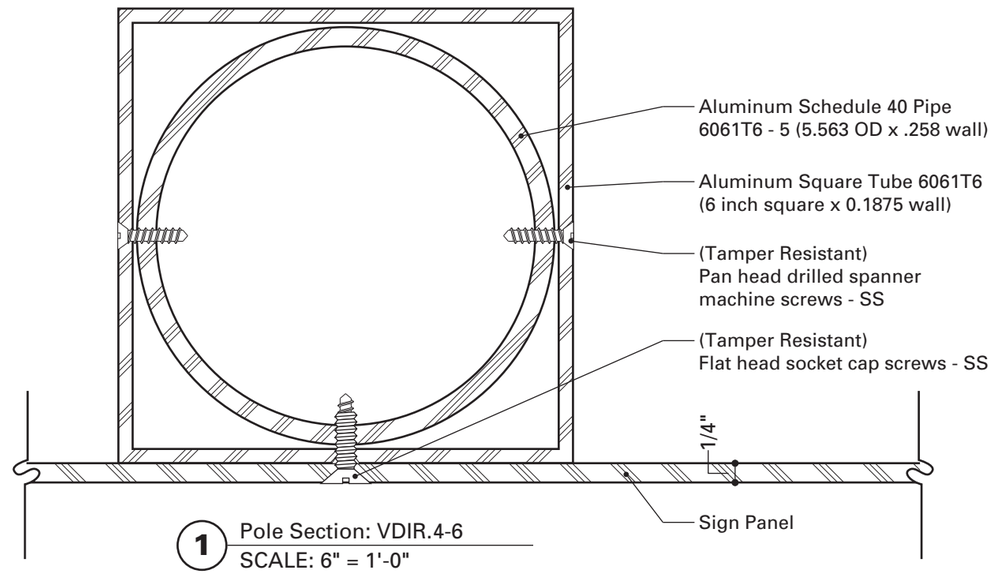

1 Pole Section: VDIR.4-6
SCALE: 6" = 1'-0"

SPECIFICATIONS

Pole Section View
VDIR.4-6

NOTES:
1. Fabricator to verify the mounting conditions and provide a detail drawing for each mounting situation, prior to fabrication. Fabricator must obtain approval from the Designer or Client for placement prior to fabrication.
2. Welds: All welds shall be ground smooth, paint all seams.
3. Hardware: All exposed hardware shall be tamper proof fasteners.
4. All exposed edges painted to match adjacent face.

ENVIRONMENTS & EXPERIENCES

merje

120 North Church Street
Suite 208
West Chester, PA 19380
T 484.266.0648
www.merjedesign.com

DATE 09/29/2014

DRAWN BY: PR

These drawings are meant for DESIGN INTENT ONLY and are not for construction. Contractor shall verify and be responsible for all dimensions and conditions of the job. Contractor shall be familiar with the site and conditions it presents. This office must be notified of any variations from the dimensions and conditions shown on this drawing. Shop drawings and details must be submitted to this office for approval prior to proceeding with fabrication. All copy shall be proofread by client and legal requirements checked by legal department.

REVISIONS

CLIENT / PROJECT

CITY OF BENTONVILLE
Bentonville, Arkansas
Wayfinding and Signage System

PROJECT NO. Y41.08062.000

SHEET TITLE

VDIR.4-6 Pole Section Construction Details

SHEET NO.

F.3

Lip-Lok Bolt Assembly

SX0121

- Shape of head provides maximum contact with inside of channel extrusion for superior holding power.
- Stainless Steel, M8 Metric Thread.
- Includes nut and washer.

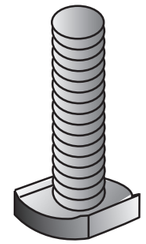

Universal Channel Clamp

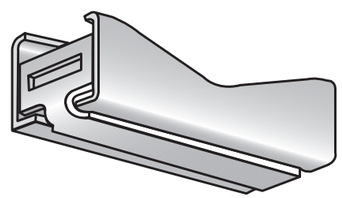

SX0220

- Compatible with all SIGNFIX Channel extrusions.
- During installation, the assembly becomes fully adjustable to any size or style sign post when used with BAND-IT Band and Buckle or Ultra-Lok Free End System.

Support Channel Extrusions

For mounting and stiffening any size sign.

SIGNFIX Channel Extrusions have identical configurations allowing the use of all SIGNFIX hardware with any extrusion.

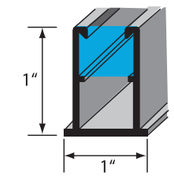

SX0073 Medium Channel Extrusion
10' Stock Length

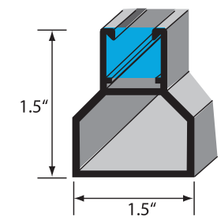

SX0130 Large Channel Extrusion
10' Stock Length

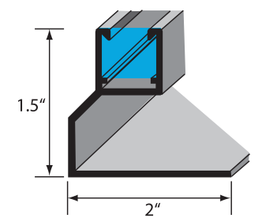

SX0090 Large Corner Angle Channel Extrusion
10' Stock Length

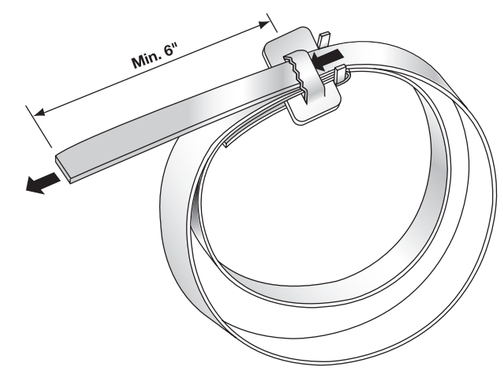

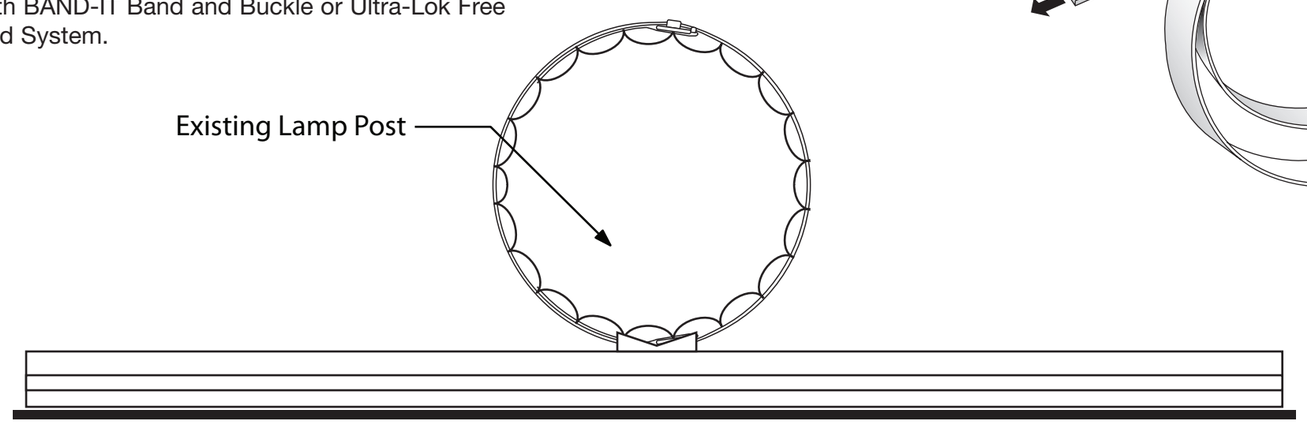

1 Mounting Detail Section
SCALE: 1/2" = 1"

SPECIFICATIONS

SignFix Channel Extrusion
PARK.2

NOTES:
1. Fabricator to verify the mounting conditions and provide a detail drawing for each mounting situation, prior to fabrication. Fabricator must obtain approval from the Designer or Client for placement prior to fabrication.
2. Welds: All welds shall be ground smooth, paint all seams.
3. Hardware: All exposed hardware shall be tamper proof fasteners.
4. All exposed edges painted to match adjacent face.

ENVIRONMENTS & EXPERIENCES

merje

120 North Church Street
Suite 208
West Chester, PA 19380
T 484.266.0648
www.merjedesign.com

DATE 09/29/2014

DRAWN BY: PR

These drawings are meant for DESIGN INTENT ONLY and are not for construction. Contractor shall verify and be responsible for all dimensions and conditions of the job. Contractor shall be familiar with the site and conditions it presents. This office must be notified of any variations from the dimensions and conditions shown on this drawing. Shop drawings and details must be submitted to this office for approval prior to proceeding with fabrication. All copy shall be proofread by client and legal requirements checked by legal department.

REVISIONS

CLIENT / PROJECT

CITY OF BENTONVILLE
Bentonville, Arkansas
Wayfinding and Signage System

PROJECT NO. Y41.08062.000

SHEET TITLE

SignFix Construction Details

SHEET NO.

F.4

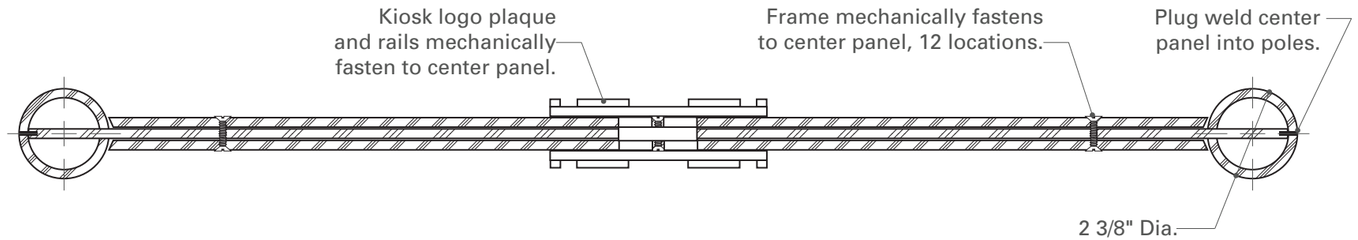

1 Section View: KIOSK.1 and 2
SCALE: 3" = 1'-0"

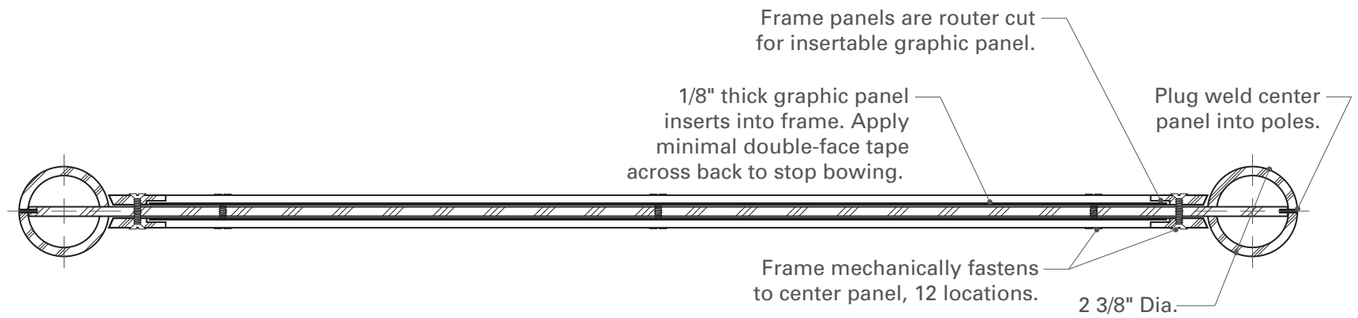

2 Section View: KIOSK.1 and 2
SCALE: 3" = 1'-0"

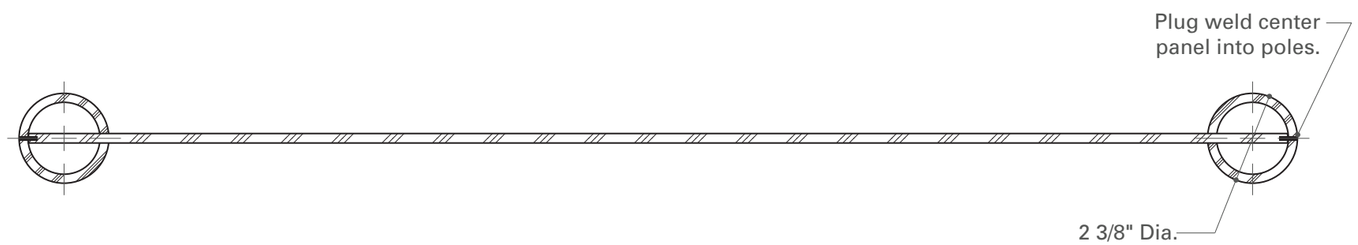

3 Section View: KIOSK.1 and 2
SCALE: 3" = 1'-0"

SPECIFICATIONS

KIOSK SECTION VIEWS
KIOSK.1
KIOSK.2

NOTES:
1. Fabricator to verify the mounting conditions and provide a detail drawing for each mounting situation, prior to fabrication. Fabricator must obtain approval from the Designer or Client for placement prior to fabrication.
2. Welds: All welds shall be ground smooth, paint all seams.
3. Hardware: All exposed hardware shall be tamper proof fasteners.
4. All exposed edges painted to match adjacent face.

ENVIRONMENTS & EXPERIENCES

merje

120 North Church Street
Suite 208
West Chester, PA 19380
T 484.266.0648
www.merjedesign.com

DATE 09/29/2014

DRAWN BY: PR

These drawings are meant for DESIGN INTENT ONLY and are not for construction. Contractor shall verify and be responsible for all dimensions and conditions of the job. Contractor shall be familiar with the site and conditions it presents. This office must be notified of any variations from the dimensions and conditions shown on this drawing. Shop drawings and details must be submitted to this office for approval prior to proceeding with fabrication. All copy shall be proofread by client and legal requirements checked by legal department.

REVISIONS

CLIENT / PROJECT

CITY OF BENTONVILLE
Bentonville, Arkansas
Wayfinding and Signage System

PROJECT NO. Y41.08062.000

SHEET TITLE

Kiosk Sections
Construction Details

SHEET NO.

F.5

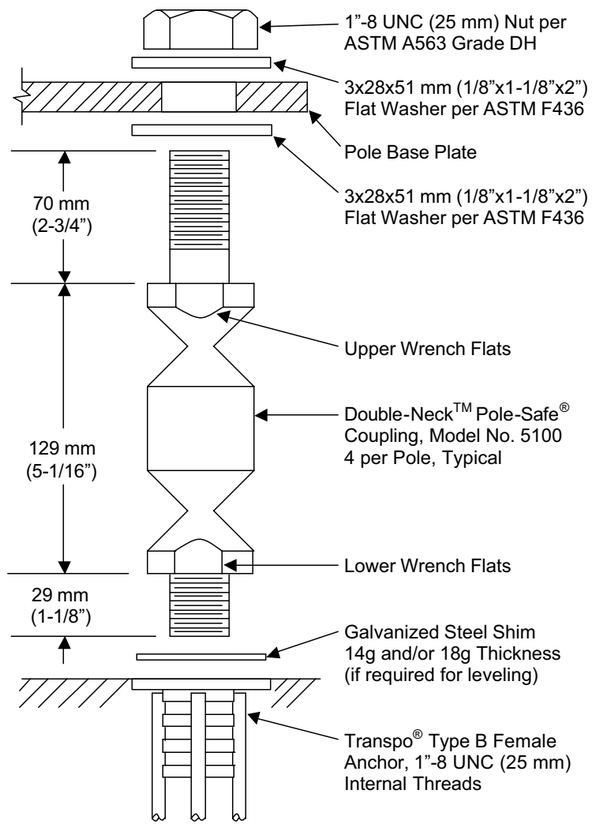

1 POLE-SAFE SERIES 5100 BREAKAWAY ASSEMBLY
SCALE: NTS

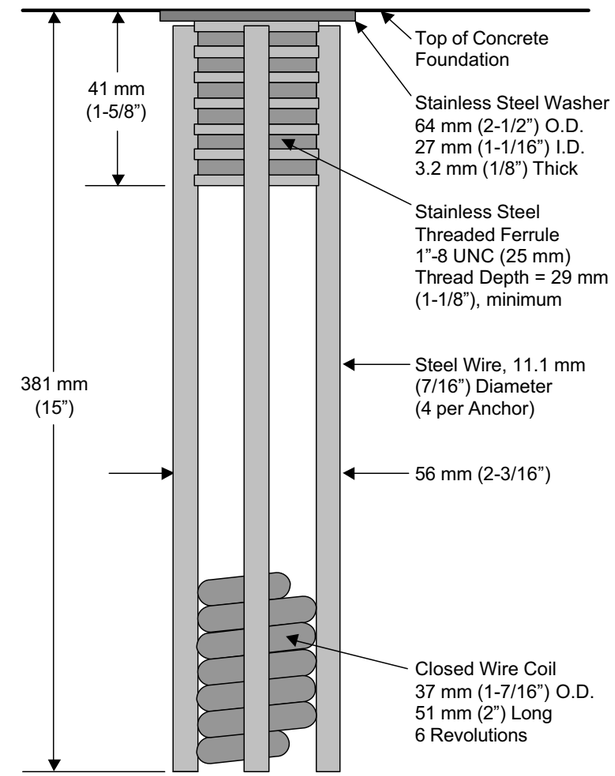

2 TRANSPO TYPE B FEMALE ANCHOR
SCALE: NTS

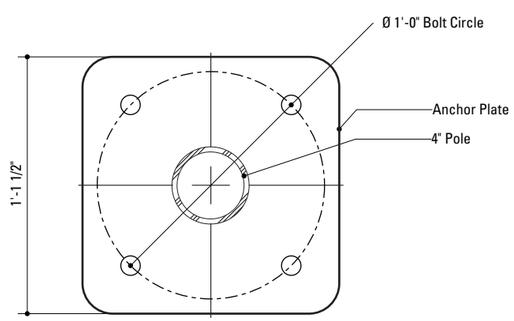

3 Anchor Plate Detail
SCALE: 3/4" = 1'-0"

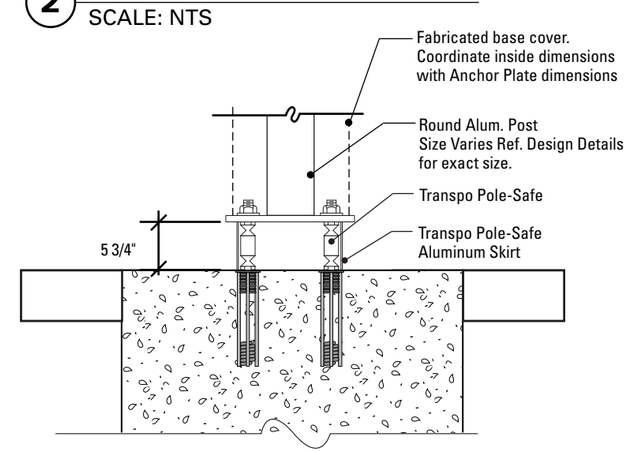

4 Assembled Section View
SCALE: 3/4" = 1'-0"

SPECIFICATIONS

POLE-SAFE Series 5100
as manufactured by
TRANSPO Industries, Inc.
20 Jones Street
New Rochelle, NY 10801
914-636-1000
www.transpo.com

PERFORMANCE CRITERIA:

1. **Double-Neck Pole-Safe meets all requirements of "AASHTO Standard Specifications for Structural Supports for Highway Signs, Luminaries, and Traffic Signals."**
2. **Double-Neck Pole-Safe has been crash-tested and FHWA approved in accordance with the requirements of NCHRP Report 350, "Recommended Procedures for the Safety Performance Evaluation of Highway Features."**
3. **Maximum Allowable Pole Mass = 450 kg (922 lb) (total including fixtures).**

PHYSICAL PROPERTIES PER COUPLING:

1. **Ultimate Tensile Strength = 221.5 kN (49.8 kips), minimum**
2. **Tensile Yield Strength = 192.0 kN (43.2 kips), minimum.**
3. **Ultimate Restrained Shear Strength = 24.5 kN (5.5 kips), maximum**

CORROSION PROTECTION:

All Hardware items are American Standard sizes, galvanized in accordance with ASTM A153 (hot dipped).

NOTES:
1. Fabricator to verify the mounting conditions and provide a detail drawing for each mounting situation, prior to fabrication. Fabricator must obtain approval from the Designer or Client for placement prior to fabrication.
2. Welds: All welds shall be ground smooth, paint all seams.
3. Hardware: All exposed hardware shall be tamper proof fasteners.
4. All exposed edges painted to match adjacent face.

E N V I R O N M E N T S & E X P E R I E N C E S
merje
120 North Church Street
Suite 208
West Chester, PA 19380
T 484.266.0648
www.merjedesign.com

DATE 09/29/2014

DRAWN BY: PR

These drawings are meant for DESIGN INTENT ONLY and are not for construction. Contractor shall verify and be responsible for all dimensions and conditions of the job. Contractor shall be familiar with the site and conditions it presents. This office must be notified of any variations from the dimensions and conditions shown on this drawing. Shop drawings and details must be submitted to this office for approval prior to proceeding with fabrication. All copy shall be proofread by client and legal requirements checked by legal department.

REVISIONS

CLIENT / PROJECT
CITY OF BENTONVILLE
Bentonville, Arkansas
Wayfinding and Signage System

PROJECT NO. Y41.08062.000

SHEET TITLE
Transpo® PoleSafe Construction Details

SHEET NO.
F.6

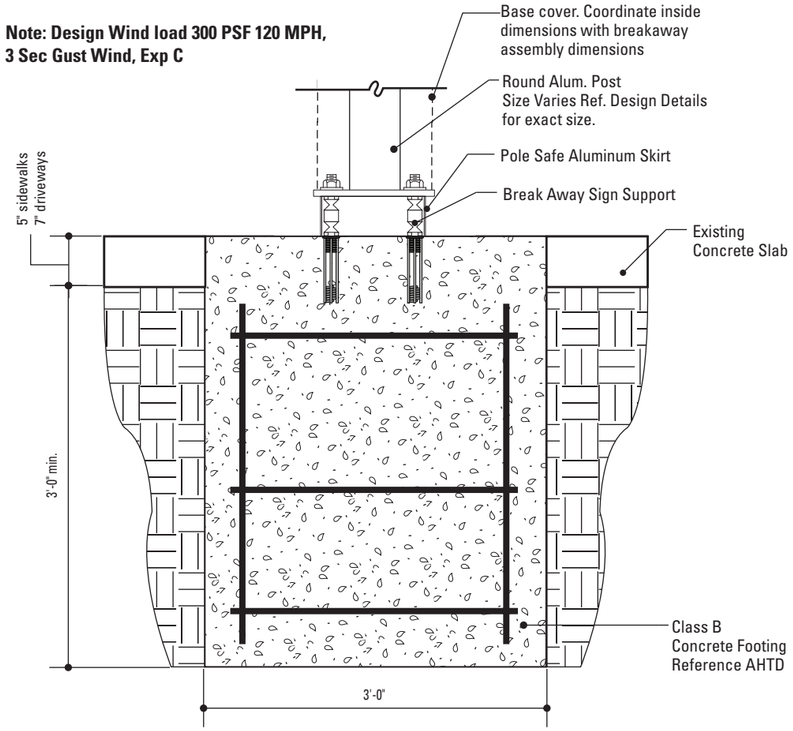

1 Section View: Foundation @ Concrete
SCALE: 3/4" = 1'-0"

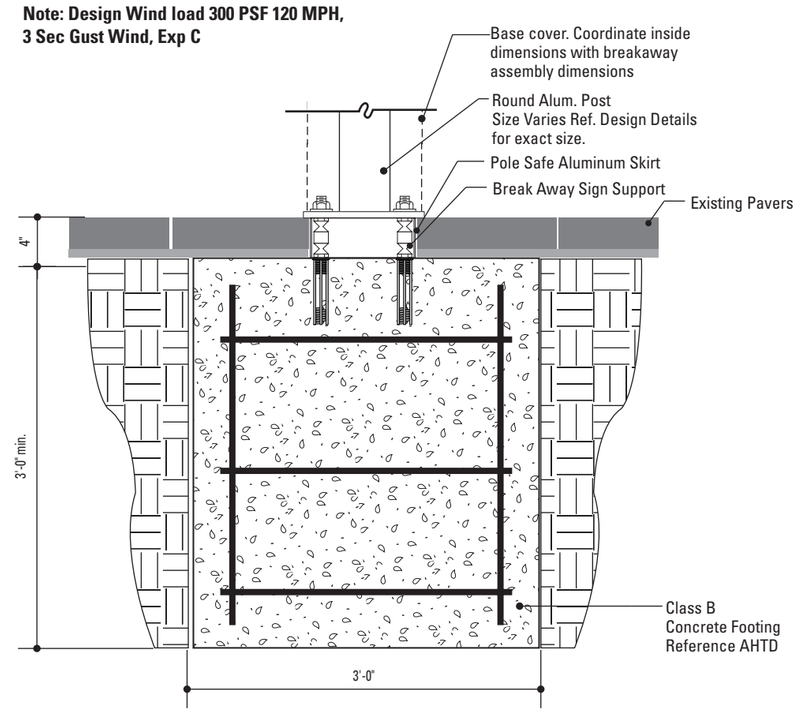

2 Section View: Foundation @ Pavers
SCALE: 3/4" = 1'-0"

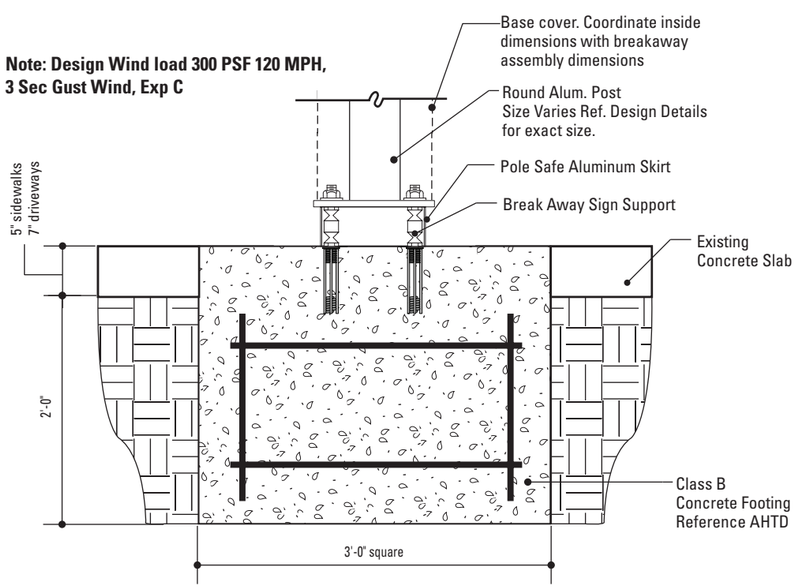

3 Section View: Foundation: Shallow Depth
SCALE: 3/4" = 1'-0"

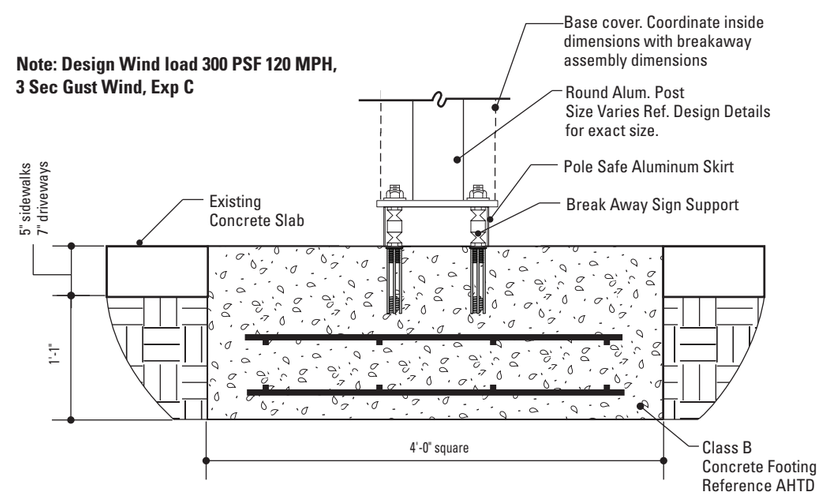

4 Section View: Foundation: Extremely Shallow Depth
SCALE: 3/4" = 1'-0"

SPECIFICATIONS

The FABRICATOR shall be familiar with all site conditions and shall be responsible for all underground utility checks.

The FABRICATOR shall be familiar with all basement/ vault locations by obtaining plans from the local municipality Department of Public Works.

Where a basement/vault interferes with a proposed location. The sign shall be relocated to a location deemed appropriate by the municipalities Department of Public Works

Where relocation is not an option the FABRICATOR will develop the appropriate mounting solution. The solution shall meet all engineering criteria as established by the standard footings. (i.e. windloads)

FINAL DESIGNS AND SHOP DRAWINGS SHALL BE SUPPLIED BY THE FABRICATOR FOR EACH OF THE BREAK-AWAY POLES IDENTIFIED AND AN ARKANSAS REGISTERED PROFESSIONAL ENGINEER IS REQUIRED TO SIGN AND SEAL THE SUBMITTAL OF SHOP DRAWINGS.

NOTE:

1) **SOIL IS AVERAGE WITH MAXIMUM ALLOWABLE SOIL PRESSURE OF 3,000 POUNDS PER SQUARE FOOT. SOIL UNIT WEIGHT OF 125 PCF AND FRICTION ANGLE OF 30 DEGREES (ASSUMED).**

2) **CONCRETE STRENGTH AT 28 DAYS F'C=4,000 PSI REINFORCEMENT SHALL BE ASTM 36 FY=60,000 PSI**

3) **FOLLOW 2008 AHTD DESIGN STANDARDS FOR MATERIAL AND CONSTRUCTION INFORMATION FOR THE SIGN POST BASES AND FOUNDATIONS NOT OTHERWISE SPECIFIED IN THESE CONTRACT DRAWINGS**

4) **FOR SIGN POST SIZES REFER TO THE DESIGN INTENT DRAWING SHEETS**

NOTES:
1. Fabricator to verify the mounting conditions and provide a detail drawing for each mounting situation, prior to fabrication. Fabricator must obtain approval from the Designer or Client for placement prior to fabrication.
2. Welds: All welds shall be ground smooth, paint all seams.
3. Hardware: All exposed hardware shall be tamper proof fasteners.
4. All exposed edges painted to match adjacent face.

ENVIRONMENTS & EXPERIENCES

merje

120 North Church Street
Suite 208
West Chester, PA 19380
T 484.266.0648
www.merjedesign.com

DATE 09/29/2014

DRAWN BY: PR

These drawings are meant for DESIGN INTENT ONLY and are not for construction. Contractor shall verify and be responsible for all dimensions and conditions of the job. Contractor shall be familiar with the site and conditions it presents. This office must be notified of any variations from the dimensions and conditions shown on this drawing. Shop drawings and details must be submitted to this office for approval prior to proceeding with fabrication. All copy shall be proofread by client and legal requirements checked by legal department.

REVISIONS

CLIENT / PROJECT

CITY OF BENTONVILLE
Bentonville, Arkansas
Wayfinding and Signage System

PROJECT NO. Y41.08062.000

SHEET TITLE

Footer Construction Details

SHEET NO.

F.7

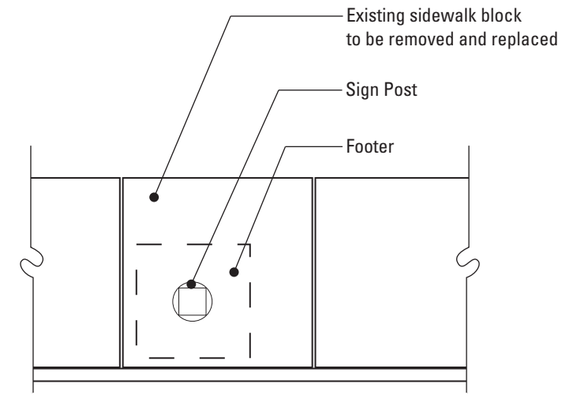

NOTE: When locating a footer within a single pavement block (max. 5'-0" x 5'-0"), adjacent to at least 2 expansion joints, the entire block of pavement shall be removed and replaced with the same materials and finish of adjacent sidewalk areas.

1 Plan: Footer Placement
SCALE: NTS

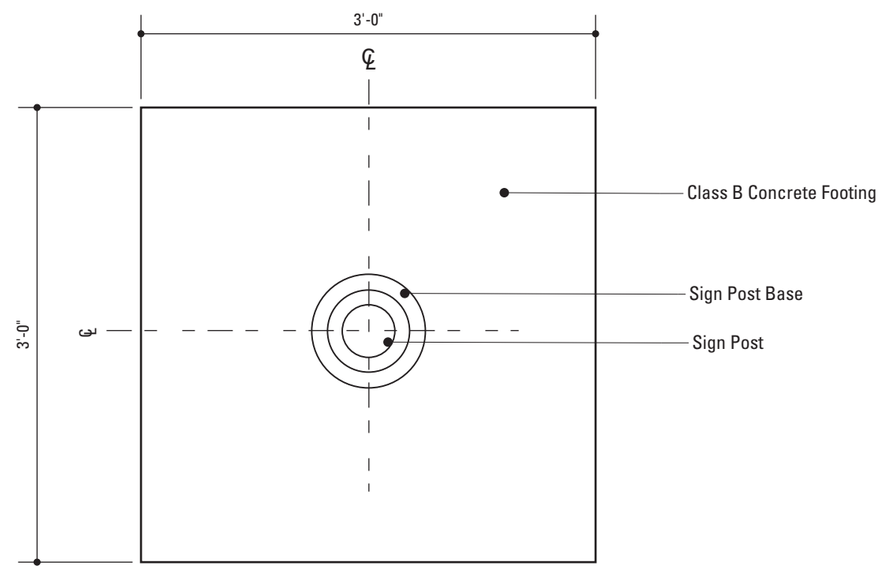

2 Plan View: Footer
SCALE: 1" = 1' - 0"

SPECIFICATIONS

The FABRICATOR shall be familiar with all site conditions and shall be responsible for all underground utility checks.

The FABRICATOR shall be familiar with all basement/ vault locations by obtaining plans from the local municipality Department of Public Works.

Where a basement/vault interferes with a proposed location. The sign shall be relocated to a location deemed appropriate by the municipalities Department of Public Works.

Where relocation is not an option the FABRICATOR will develop the appropriate mounting solution. The solution shall meet all engineering criteria as established by the standard footings. (i.e. windloads)

FINAL DESIGNS AND SHOP DRAWINGS SHALL BE SUPPLIED BY THE FABRICATOR FOR EACH OF THE BREAK-AWAY POLES IDENTIFIED AND AN ARKANSAS REGISTERED PROFESSIONAL ENGINEER IS REQUIRED TO SIGN AND SEAL THE SUBMITTAL OF SHOP DRAWINGS.

NOTE:
1) **SOIL IS AVERAGE WITH MAXIMUM ALLOWABLE SOIL PRESSURE OF 3,000 POUNDS PER SQUARE FOOT. SOIL UNIT WEIGHT OF 125 PCF AND FRICTION ANGLE OF 30 DEGREES (ASSUMED).**

2) **CONCRETE STRENGTH AT 28 DAYS F'C=4,000 PSI REINFORCEMENT SHALL BE ASTM 36 FY=60,000 PSI**

3) **FOLLOW 2008 AHTD DESIGN STANDARDS FOR MATERIAL AND CONSTRUCTION INFORMATION FOR THE SIGN POST BASES AND FOUNDATIONS NOT OTHERWISE SPECIFIED IN THESE CONTRACT DRAWINGS**

4) **FOR SIGN POST SIZES REFER TO THE DESIGN INTENT DRAWING SHEETS**

NOTES:
1. Fabricator to verify the mounting conditions and provide a detail drawing for each mounting situation, prior to fabrication. Fabricator must obtain approval from the Designer or Client for placement prior to fabrication.
2. Welds: All welds shall be ground smooth, paint all seams.
3. Hardware: All exposed hardware shall be tamper proof fasteners.
4. All exposed edges painted to match adjacent face.

E N V I R O N M E N T S & E X P E R I E N C E S

merje

120 North Church Street
Suite 208
West Chester, PA 19380
T 484.266.0648
www.merjedesign.com

DATE 09/29/2014

DRAWN BY: PR

These drawings are meant for DESIGN INTENT ONLY and are not for construction. Contractor shall verify and be responsible for all dimensions and conditions of the job. Contractor shall be familiar with the site and conditions it presents. This office must be notified of any variations from the dimensions and conditions shown on this drawing. Shop drawings and details must be submitted to this office for approval prior to proceeding with fabrication. All copy shall be proofread by client and legal requirements checked by legal department.

REVISIONS

CLIENT / PROJECT

CITY OF BENTONVILLE
Bentonville, Arkansas
Wayfinding and Signage System

PROJECT NO. Y41.08062.000

SHEET TITLE

Footer Construction Details

SHEET NO.

F.8

NOTE: FOR SIGNS THAT MOUNT INTO BRICK PAVERS, CONCRETE PAD IS REPLACED WITH MATCHING PAVERS. PAVERS SHALL MEET FLUSH TO POST AND BE FLUSH WITH SIDEWALK SURFACE.

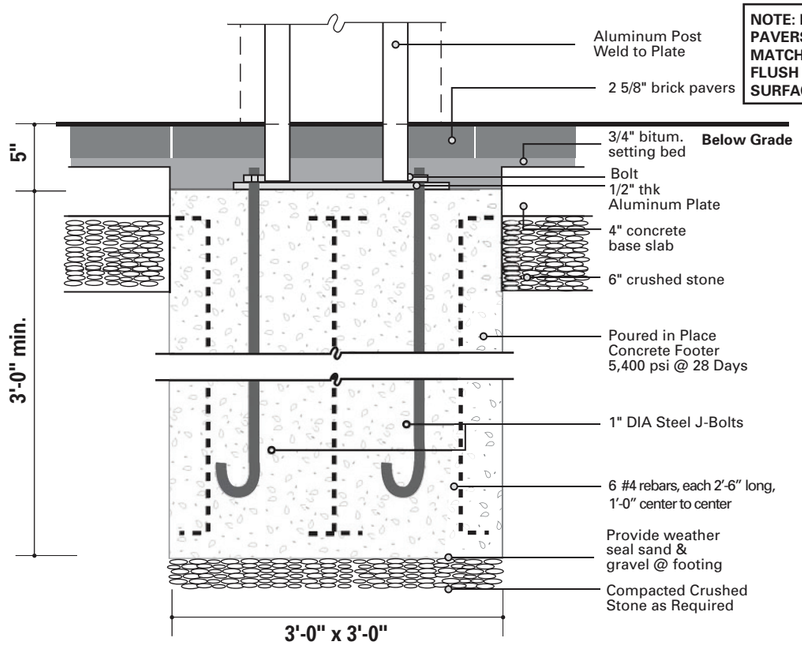

1 Section: J-Bolt MOUNTING – Support Cabinet in Brick Pavers
SCALE: 1" = 1' - 0"

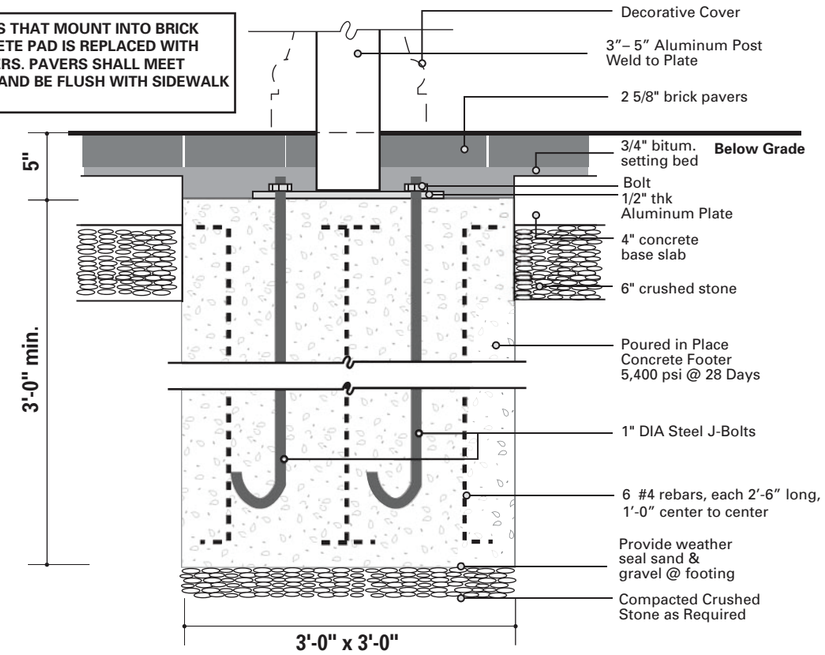

2 Section: J-Bolt MOUNTING - 3"– 5" Pole in Brick Pavers
SCALE: 1" = 1' - 0"

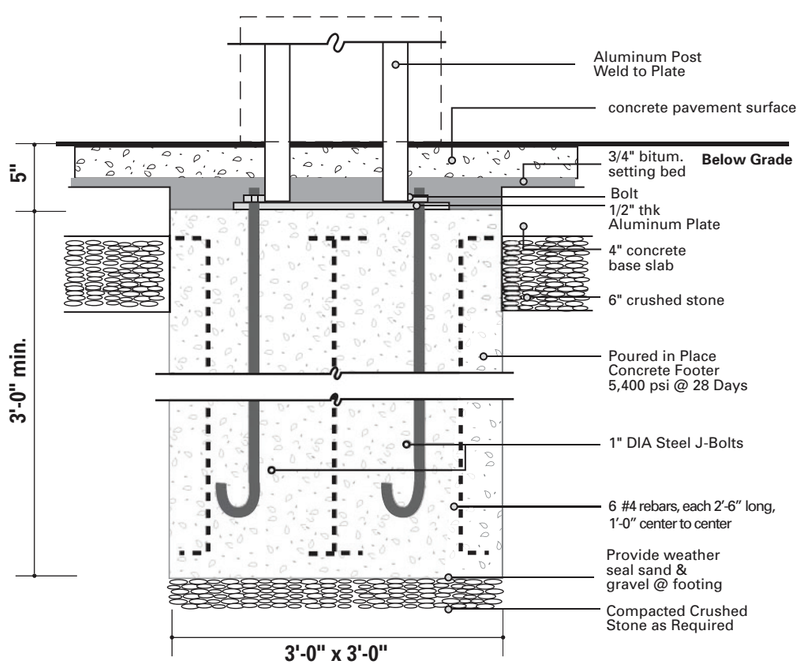

3 Section: J-Bolt MOUNTING – Support Cabinet in Concrete Pavement
SCALE: 1" = 1' - 0"

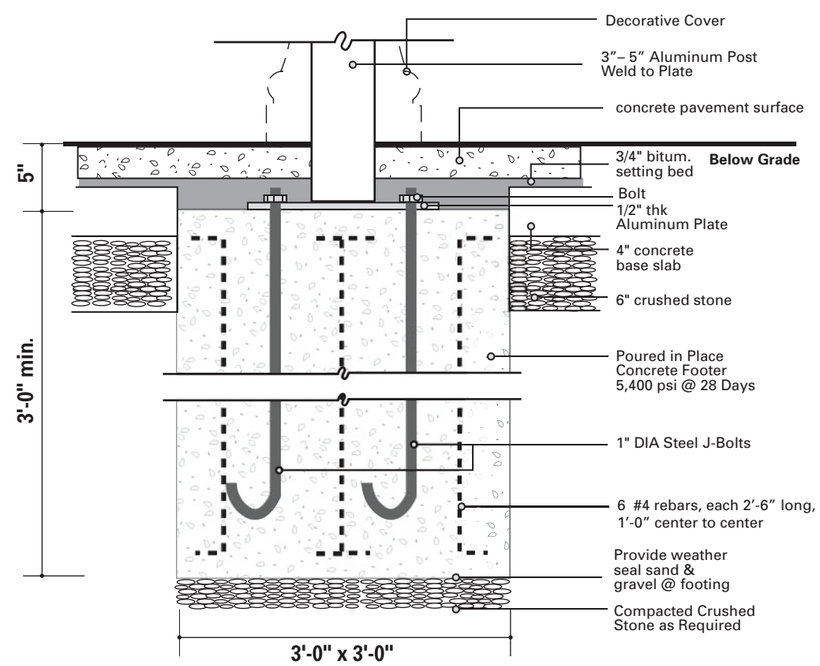

4 Section: J-Bolt MOUNTING - 3"– 5" Pole in Concrete Pavement
SCALE: 1" = 1' - 0"

SPECIFICATIONS

The FABRICATOR shall be familiar with all site conditions and shall be responsible for all underground utility checks.

The FABRICATOR shall be familiar with all basement/ vault locations by obtaining plans from the local municipality Department of Public Works.

Where a basement/vault interferes with a proposed location. The sign shall be relocated to a location deemed appropriate by the municipalities Department of Public Works

Where relocation is not an option the FABRICATOR will develop the appropriate mounting solution. The solution shall meet all engineering criteria as established by the standard footings. (i.e. windloads)

FINAL DESIGNS AND SHOP DRAWINGS SHALL BE SUPPLIED BY THE FABRICATOR FOR EACH OF THE BREAK-AWAY POLES IDENTIFIED AND AN ARKANSAS REGISTERED PROFESSIONAL ENGINEER IS REQUIRED TO SIGN AND SEAL THE SUBMITTAL OF SHOP DRAWINGS.

NOTE:

1) **SOIL IS AVERAGE WITH MAXIMUM ALLOWABLE SOIL PRESSURE OF 3,000 POUNDS PER SQUARE FOOT. SOIL UNIT WEIGHT OF 125 PCF AND FRICTION ANGLE OF 30 DEGREES (ASSUMED).**

2) **CONCRETE STRENGTH AT 28 DAYS F'C=4,000 PSI REINFORCEMENT SHALL BE ASTM 36 FY=60,000 PSI**

3) **FOLLOW 2008 AHTD DESIGN STANDARDS FOR MATERIAL AND CONSTRUCTION INFORMATION FOR THE SIGN POST BASES AND FOUNDATIONS NOT OTHERWISE SPECIFIED IN THESE CONTRACT DRAWINGS**

4) **FOR SIGN POST SIZES REFER TO THE DESIGN INTENT DRAWING SHEETS**

NOTES:
1. Fabricator to verify the mounting conditions and provide a detail drawing for each mounting situation, prior to fabrication. Fabricator must obtain approval from the Designer or Client for placement prior to fabrication.
2. Welds: All welds shall be ground smooth, paint all seams.
3. Hardware: All exposed hardware shall be tamper proof fasteners.
4. All exposed edges painted to match adjacent face.

ENVIRONMENTS & EXPERIENCES

merje

120 North Church Street
Suite 208
West Chester, PA 19380
T 484.266.0648
www.merjedesign.com

DATE 09/29/2014

DRAWN BY: PR

These drawings are meant for DESIGN INTENT ONLY and are not for construction. Contractor shall verify and be responsible for all dimensions and conditions of the job. Contractor shall be familiar with the site and conditions it presents. This office must be notified of any variations from the dimensions and conditions shown on this drawing. Shop drawings and details must be submitted to this office for approval prior to proceeding with fabrication. All copy shall be proofread by client and legal requirements checked by legal department.

REVISIONS

CLIENT / PROJECT

CITY OF BENTONVILLE
Bentonville, Arkansas
Wayfinding and Signage System

PROJECT NO. Y41.08062.000

SHEET TITLE

Footer Construction Details

SHEET NO.

F.9

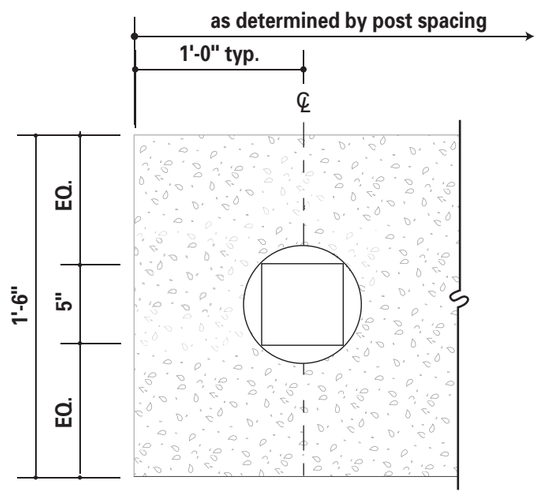

1 Plan View of Footer Detail - Concrete Pavement
SCALE: 1/8" = 1"

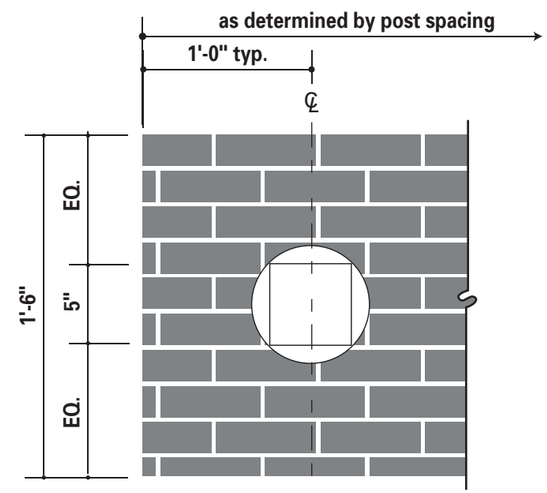

2 Plan View of Footer Detail - Brick Pavers
SCALE: 1/8" = 1"

SPECIFICATIONS

The FABRICATOR shall be familiar with all site conditions and shall be responsible for all underground utility checks.

The FABRICATOR shall be familiar with all basement/ vault locations by obtaining plans from the local municipality Department of Public Works.

Where a basement/vault interferes with a proposed location. The sign shall be relocated to a location deemed appropriate by the municipalities Department of Public Works

Where relocation is not an option the FABRICATOR will develop the appropriate mounting solution. The solution shall meet all engineering criteria as established by the standard footings. (i.e. windloads)

FINAL DESIGNS AND SHOP DRAWINGS SHALL BE SUPPLIED BY THE FABRICATOR FOR EACH OF THE BREAK-AWAY POLES IDENTIFIED AND AN ARKANSAS REGISTERED PROFESSIONAL ENGINEER IS REQUIRED TO SIGN AND SEAL THE SUBMITTAL OF SHOP DRAWINGS.

NOTE:

1) **SOIL IS AVERAGE WITH MAXIMUM ALLOWABLE SOIL PRESSURE OF 3,000 POUNDS PER SQUARE FOOT. SOIL UNIT WEIGHT OF 125 PCF AND FRICTION ANGLE OF 30 DEGREES (ASSUMED).**

2) **CONCRETE STRENGTH AT 28 DAYS F'C=4,000 PSI REINFORCEMENT SHALL BE ASTM 36 FY=60,000 PSI**

3) **FOLLOW 2008 AHTD DESIGN STANDARDS FOR MATERIAL AND CONSTRUCTION INFORMATION FOR THE SIGN POST BASES AND FOUNDATIONS NOT OTHERWISE SPECIFIED IN THESE CONTRACT DRAWINGS**

4) **FOR SIGN POST SIZES REFER TO THE DESIGN INTENT DRAWING SHEETS**

NOTES:
1. Fabricator to verify the mounting conditions and provide a detail drawing for each mounting situation, prior to fabrication. Fabricator must obtain approval from the Designer or Client for placement prior to fabrication.
2. Welds: All welds shall be ground smooth, paint all seams.
3. Hardware: All exposed hardware shall be tamper proof fasteners.
4. All exposed edges painted to match adjacent face.

E N V I R O N M E N T S & E X P E R I E N C E S

merje

120 North Church Street
Suite 208
West Chester, PA 19380
T 484.266.0648
www.merjedesign.com

DATE 09/29/2014

DRAWN BY: PR

These drawings are meant for DESIGN INTENT ONLY and are not for construction. Contractor shall verify and be responsible for all dimensions and conditions of the job. Contractor shall be familiar with the site and conditions it presents. This office must be notified of any variations from the dimensions and conditions shown on this drawing. Shop drawings and details must be submitted to this office for approval prior to proceeding with fabrication. All copy shall be proofread by client and legal requirements checked by legal department.

REVISIONS

CLIENT / PROJECT

CITY OF BENTONVILLE
Bentonville, Arkansas
Wayfinding and Signage System

PROJECT NO. Y41.08062.000

SHEET TITLE

Footer Construction Details

SHEET NO.

F.10

PART 1 – GENERAL

1.01 WORK RELATED

A Labor, materials, equipment and services necessary for the fabrication, delivery and installation of signage as described in the detail design intent drawings.

B Refer to the message schedule for a complete list of sign types and quantities.

Signs listed on message schedule should match those indicated on sign location plans. Contractor to notify owner of any discrepancies in sign quantities by doing take-offs before manufacturing signs.

C Signage is located in Bentonville, Arkansas.

D For all signs, all fasteners, support structures required for installation.

1.02 RELATED WORK

A General carpentry and painting requirements: all work to be done in a professional manner and to the highest trade standards.

B Use OSHA safety requirements if necessary for pedestrian and/or vehicular safety.

1.03 REGULATORY REQUIREMENTS

Observe applicable codes, sign ordinances and ADA guidelines for handicapped and fire/life safety signing. All exterior signs located in the public right-of-way, including local city, county and state roadways, shall comply with the 2009 MUTCD standards.

1.04 REFERENCE STANDARDS

Refer to current editions of the following:

A MUTCD standards manual, 2009 edition.

B Federal ADAAG, 2010 standards.

C ASTM B 209–Aluminum sheet and plate.

D ASTM B 221–Aluminum-alloy extruded bars, rods, wire, shapes and tubes.

E ASTM D 822–Light and water exposure apparatus (carbon-arc type) for testing paint, varnish, lacquer and related products.

F ASTM E 84–Surface burning characteristics of building materials.

G ASTM C 143-74–Concrete slump test.

H FS L-P-391–Plastic sheet, rods and tubing, rigid and cast materials.

I FS L-P-387–Plastic sheet, laminated, thermosetting.

J ASTM C 880–Stone, granite flexural strength testing.

K PEI_Porcelain Enamel Institute

L UL 943–Fluorescent lamp ballasts.

1.05 SUBMITTALS

A Bid submittal requirements

1 All of the inclusive bid submittals must be provided to be considered a qualified bid.

2 All proprietary contractual paperwork provided by the client filled out accurately, including all requested bonding and insurance information.

3 Submit completed spreadsheet (form and/or file provided) with all requested line item prices. Ensure that all row and column totals add up properly. Use the provided format, do NOT use a different spreadsheet format.

4 Submit a projected project schedule. Schedule will show major milestones such as sample submittals, fabrication, and installation. The payment schedule will be tied to reaching these milestones. Schedule will be updated regularly throughout the project.

B Requirements

1 Schedule shop drawings, product data and sample submittals for delivery at the same time.

2 The owner may hold shop drawings, product data and samples in cases where a partial submittal cannot be reviewed until associated items have been received.

3 Allocate not less than four weeks, plus mailing time, for processing by the owner.

C Schedule

1 Submit Gantt-style schedule with all pertinent dates and milestones for the project.

2 Include all lead times for materials, processes and thrid party products or components.

3 Include submittal delivery dates, fabrication and installation dates.

4 Allow several weeks in schedule for review and revision time for all submittals.

5 Revise schedule regularly as project details dictate.

6 Contractor shall pay $1,000 a day for each day past the agreed upon project deadline, unless otherwise stated in the owner-contractor agreement.

D Shop Drawings

NOTE: All final shop drawings must have an engineering stamp from a state licensed engineer before being approved for fabrication.

1 Submit three (3) sets of shop drawings as outlined below.

2 Include plans, elevations, sections and large scale details of sign wording and lettering layout. Show anchorages and accessory items. Provide mounting templates.

3 Show fabrication and installation details, including all sign components such as extrusions, brackets, bracing, hardware, internal framing, foundations, etc.

4 Provide engineering data to confirm viability of signs and supports, including structural stability of all signs, fasteners and foundation design.

5 Structural details must be reviewed and stamped by a state certified structural engineer, ensuring structural integrity and safety.

E Sub Contractor Qualifications Information

1 The total percentage of subcontracted work on this project is not to exceed 49% including installation.

2 Fabricator must submit credentials for any subcontractor selected to execute any portion of this contract. This must be submitted with proposal or bid. Demonstrate subs qualifications for doing specified work.

F Samples

1 Submit three (3) sets of each sample required.

2 Owner reserves the right to reject any samples that do not satisfy the construction, finish or color requirements. Submit additional samples as required to obtain final approval.

3 Samples shall be labeled on the back, designating item number, name of manufacturer, name of project.

4 The following sample submittals are required for this project:

The following samples MUST be submitted and approved PRIOR to the fabrication of the signs.

a) 3 sets of all color samples, including paint and vinyl samples on thin aluminum plates (approx. 3" x 6").

b) 2 sets of material samples.

c) Sample fasteners, hardware and mounting hardware sufficient to obtain clear ideas of how signs are fabricated, made changeable and installed.

5 Samples should represent extreme variations in color and texture that might occur during fabrication.

G Maintenance Data

1 Submit two (2) copies of each manufacturer's recommendations for maintenance of all items.

2 The instructions shall cover cleaning, repair, repainting and maintenance of signs, including data on cleaning solutions or methods of application which should be avoided.

1.06 DELIVERY OF ATTIC STOCK (IF ANY)

A For any attic stock ordered, package separately or in like groups labeled as to contents. Include installation hardware, adhesives and installation instructions; include a reasonable array of alternative adhesives, fasteners or materials to be able to respond effectively to varying field conditions.

NOTES:
1. Fabricator to verify the mounting conditions and provide a detail drawing for each mounting situation, prior to fabrication. Fabricator must obtain approval from the Designer or Client for placement prior to fabrication.
2. Welds: All welds shall be ground smooth, paint all seams.
3. Hardware: All exposed hardware shall be tamper proof fasteners.
4. All exposed edges painted to match adjacent face.

ENVIRONMENTS & EXPERIENCES

merje

120 North Church Street
Suite 208
West Chester, PA 19380
T 484.266.0648
www.merjedesign.com

DATE 09/29/2014

DRAWN BY: PR

These drawings are meant for DESIGN INTENT ONLY and are not for construction. Contractor shall verify and be responsible for all dimensions and conditions of the job. Contractor shall be familiar with the site and conditions it presents. This office must be notified of any variations from the dimensions and conditions shown on this drawing. Shop drawings and details must be submitted to this office for approval prior to proceeding with fabrication. All copy shall be proofread by client and legal requirements checked by legal department.

REVISIONS

CLIENT / PROJECT

CITY OF BENTONVILLE
Bentonville, Arkansas
Wayfinding and Signage System

PROJECT NO. Y41.08062.000

SHEET TITLE

Performance Specifications

SHEET NO.

G.1

PART 1 – GENERAL *continued*

1.07 PROTECTION

A Store and protect assemblies from injury at the shop, in transit to the job and until erected in place, completed, inspected and accepted.

B Take special precautions to prevent pilferage both prior to and after installation. Be prepared to provide replacements for any material so removed from the site.

1.08 INSPECTION

A Materials, colors and fabricated or partially fabricated items shall be available for inspection at the factory or elsewhere, by the owner or designer during the process of manufacture and until final delivery, installation and acceptance, to determine whether or not there is compliance with the requirements of these specifications.

B Approval prior to the time of final acceptance shall not preclude rejection of delivered items which do not satisfy these specifications.

1.09 REORDERING

All items specified herein shall be available to the owner in additional quantities for a period of 10 years after completion of all work called for in this specification.

1.10 WARRANTY

All warranties on fabricator's standard contract forms must be modified to match warranty criteria mentioned herewith. Any changes in warranty length or criteria must be negotiated prior to contract signing. Any discrepancies from fabricator's contract are superseded by this performance specification.

ALL PAINT FINISH WARRANTIES MUST BE ACCOMPANIED BY SIGNED WARRANTY AGREEMENTS WITH THE PAINT MANUFACTURER AND FINISHER.

A Warrant all products (including, but not limited to, materials, hardware and finishes) against any and all defects for **a minimum period of five (5) years** from date of installation.

B Correct any and all defects in material and/or workmanship which may appear during the warranty period by restoring defective work to the standard of the contract documents at no cost to the owner and to the owner's satisfaction.

C Custom color background and characters printed with 3M inks direct to 3M High Intensity Prismatic Reflective Sheeting Series 3930, with 3M ElectroCut Film 1170 overlaminate (applied according to 3M specifications to aluminum sheet), must be warranted for a period of eight (8) years and shall not excessively fade, discolor, crack, craze, peel, blister or lose reflectivity such that the signs become visually unsuitable for their intended purpose.

D Vinyl die-cut letters shall be warranted for five (5) years against delamination from substrate.

E Correct any and all paint finish defects which may appear during the warranty period by restoring defective work to the standard of the contract documents at no cost to the owner and to the owner's satisfaction.

F Additional corrections shall include, but not be limited to, the following:

1. Peeling, bubbling, crazing, chalking, rusting or other disintegration of the sign face or of the messages or of the edge finish of the sign inserts or panel.
2. Corrosion developing beneath paint surfaces of the support systems (except when it is the result of obvious vandalism or other external damage to the paint surfaces).
3. Corrosion of the fastenings.
4. The signs not remaining true or plumb on their supports.
5. Fading of the colors when matched against a sample of the original color and material.
6. Discoloration of metal finishes.

1.11 ALTERNATE FABRICATION

A The drawings show design intent only. The fabricator is responsible for fabrication and overall level of quality. Any changes in design, materials, fabrication techniques or details necessary to the successful completion of this project should be communicated to the designer and the owner in a timely fashion.

Further development and engineering of designer's details (for fabrication and installation) is expected and should be shown in the shop drawings.

B The designer recognizes that manufacturers may have shop fabrication techniques that differ from details shown. Suggested changes in fabrication that do not alter the design intent nor reduce the quality will be considered by the designer provided they are submitted in sketch from as soon as possible prior to shop drawing preparation.

C Any value engineering changes during fabrication shall be split evenly between the contractor and owner.

NOTES:
1. Fabricator to verify the mounting conditions and provide a detail drawing for each mounting situation, prior to fabrication. Fabricator must obtain approval from the Designer or Client for placement prior to fabrication.
2. Welds: All welds shall be ground smooth, paint all seams.
3. Hardware: All exposed hardware shall be tamper proof fasteners.
4. All exposed edges painted to match adjacent face.

ENVIRONMENTS & EXPERIENCES
merje
120 North Church Street
Suite 208
West Chester, PA 19380
T 484.266.0648
www.merjedesign.com

DATE 09/29/2014

DRAWN BY: PR

These drawings are meant for DESIGN INTENT ONLY and are not for construction. Contractor shall verify and be responsible for all dimensions and conditions of the job. Contractor shall be familiar with the site and conditions it presents. This office must be notified of any variations from the dimensions and conditions shown on this drawing. Shop drawings and details must be submitted to this office for approval prior to proceeding with fabrication. All copy shall be proofread by client and legal requirements checked by legal department.

REVISIONS

CLIENT / PROJECT

CITY OF BENTONVILLE
Bentonville, Arkansas
Wayfinding and Signage System

PROJECT NO. Y41.08062.000

SHEET TITLE

Performance Specifications

SHEET NO.

G.2

PART 2 – PRODUCTS

2.01 QUALITY ASSURANCE

A Materials used for this project shall be new and not reconditioned or re-purposed.

B Fabricator shall be familiar with the site and all conditions related to the fabrication and installation of the project.

C Use only personnel thoroughly skilled and experienced with the products and method for fabrication and installation of signage specified.

D The owner shall reserve the right to reject any shop drawings, samples or other submittals, as well as any finished product or installation, than cannot meet the standard of quality established. Any such decision will be considered final and not subject to recourse.

E The intent of the contract documents is to provide everything necessary for a complete contract. In the event of conflict or omission, the fabricator shall consult the owner for resolution.

F Materials and hardware not specified, but necessary to the complete functioning of the sign, shall conform to the quality level established.

2.02 PREFERRED MATERIAL SUPPLIERS

Vendors and products listed below are specified for this product. These products have either been tested on prior projects and have delivered proven results, or have properties unique to this project. Any suggested substitutions must have documentation demonstrating the same level of quality and warranty PRIOR to bidding. Bids are subject to disqualification if unauthorized substitutions are used.

A Acrylic Polyurethane paint

Matthews Paint (a division of PPG), Delaware, OH 43015

Phone: 800-323-6593

www.matthewspaint.com

B All vinyl and vinyl coatings

3M Commercial Graphics Division, St.Paul, MN 55144

Phone: 888-364-3577

www. solutions.3m.com

C Map and Interpretive panels

Digital High Pressure Laminate (dHPL)

iZone, Temple, TX 76502

Phone: 888-464-9663

www.izoneimaging.com

or

Fossil Industries, Deer Park, NY 11729

Phone: 631-254-9200

www.fossilgraphics.com

D Posts and base covers

Holophane®, Granvillle, OH 43023

866-759-1577

www.holophane.com

2.03 DESIGN REQUIREMENTS

A Typeface specifications

1 Typeface (or fonts) are purchased from respective font websites, licensed to the designer, and will not be shared with the fabricator. Fabricators will be responsible for purchasing matching licensed fonts for project usage. See the Graphics Standards section of the design intent drawings for the specific fonts utilized within the project.

2 Size: all letter heights specified are based on the cap height of the capital letter.

3 Alignment: When setting type or installing cut letters, ensure that letters are perfectly straight and even, with no characters set crooked or "popping up."

4 Spacing

a) See the Graphics Standards section of the design intent drawings for the samples of letterspacing programs. The proper letter and word spacing is of extreme importance to the desired look of the signs.

b) Contractor is responsible for visual corrections to the typesetting that might be necessary. Any problems in spacing or copyfitting should be brought to the attention of the designer for solution.

B Visual justification

1 Display type may align mechanically but not optically. When flushing copy message left, a visual adjustment shall be made compensating for arrows and those letter forms that must be extended into the left hand margin to appear flush. For example, S and O must extend beyond the left margin slightly.

C Arrow and symbol specifications

1 Symbols: Symbols and pictographs shall conform to the symbol signs issued by the Department of Transportation and the American Institute of Graphic Arts. To obtain more information and digitized Macintosh (EPS) compatible AIGA symbols, contact: Society for Environmental Graphic Design (SEGD), 1000 Vermont Ave., NW, Suite 400, Washington, DC 20005, Phone: 202-638-5555.

2 Arrows: Arrows on all signs shall use the arrow files which will be provided by the owner to the successful bidder.

a) Arrow size will be dimensioned by height as shown in the design intent drawings.

D Artwork

1 The contractor shall be provided electronic Adobe InDesign and Illustrator files with the project artwork and templates. The final output quality of the artwork for finished signage shall be the responsibility of the contractor. The owner's representative reserves the right to reject artwork if it fails to meet the standard of quality established.

2.04 MATERIALS

A Aluminum extrusions: For mounting plates and structural frames shall conform to ASTM B-221, alloy 6063-T6. Shapes, sizes and weights of members shall be as required for structural stability. All connections of aluminum members shall be heli-arc welded, continuous fillets, ground smooth on all exposed surfaces, unless specifically detailed otherwise. Aluminum finishes shall be hereinafter specified.

B Aluminum sheet and plate: Type 5052-H-32 alloy aluminum, thickness as indicated. For painted finish, faces shall be etched to give an even stain finish and remove oxidation, then conversion coated to improve paint adhesion and inhibit corrosion. Surface shall be belt-sanded for a smooth finish, edges filed and ground then immersed in hot alkaline cleaner to remove contamination. For anodized finish, prepare for finish AA-M31-C21-A31. Aluminum should have consistency of color and finish throughout the project.

C Stainless Steel sheet: Chromium stainless steel sheet. Use type 304 or type 316 austenitic stainless steel with 16% chromium and 10% nickel.

D Hangers, brackets and accessories: Shall be of the type and size indicated. Where such items are not specifically called for, provide hangers, brackets and accessories as required for the proper execution of the work, as approved by the owner.

E Paint for aluminum: All coating to protect aluminum by uniformly penetrating, filling, and sealing surface pores. Coating should provide an invisible barrier to weathering, airborne contaminants, graffiti, industrial air pollution, mildew, and salt air. Coating should not yellow, peel or flake. *Coating should be guaranteed in conformance with Warranty Section 1.10-E.* ***Sign panels shall be pre-drilled in proper locations before any priming, painting or coating processes.*** Aluminum should have consistency of color and finish throughout the project.

1 **Matthews Acrylic Polyurethane (PPG)**

MAP® is a superior two-component catalyzed coating system that provides a high degree of ultraviolet, chemical and weather protection for signage and architectural metals. When used as a a complete system, primer through topcoat, MAP provides a high performance finish that lasts for years.

a) Pretreatment: Mechanically clean and chemically pretreat fabricated items in accordance with coating manufacturer's requirements and AAMA requirements for finish indicated.

NOTES:
1. Fabricator to verify the mounting conditions and provide a detail drawing for each mounting situation, prior to fabrication. Fabricator must obtain approval from the Designer or Client for placement prior to fabrication.
2. Welds: All welds shall be ground smooth, paint all seams.
3. Hardware: All exposed hardware shall be tamper proof fasteners.
4. All exposed edges painted to match adjacent face.

ENVIRONMENTS & EXPERIENCES

merje

120 North Church Street
Suite 208
West Chester, PA 19380
T 484.266.0648
www.merjedesign.com

DATE 09/29/2014

DRAWN BY: PR

These drawings are meant for DESIGN INTENT ONLY and are not for construction. Contractor shall verify and be responsible for all dimensions and conditions of the job. Contractor shall be familiar with the site and conditions it presents. This office must be notified of any variations from the dimensions and conditions shown on this drawing. Shop drawings and details must be submitted to this office for approval prior to proceeding with fabrication. All copy shall be proofread by client and legal requirements checked by legal department.

REVISIONS

CLIENT / PROJECT

CITY OF BENTONVILLE
Bentonville, Arkansas
Wayfinding and Signage System

PROJECT NO. Y41.08062.000

SHEET TITLE

Performance Specifications

SHEET NO.

G.3

PART 2 – PRODUCTS *continued*

1) Pretreatment: One coat 74-734 and 74-735 metal pre-treat at .25 mils DFT or one coat 74-793 spray bond at .15 to .25 mils DFT.

b) Apply primer and finish coats in accordance with coating manufacturer's requirements for finish indicated.

1) Finish coat: One coat Matthews Acrylic Polyurethane 2 mils DFT. As a final step, spray one coat of satin clear Matthews Acrylic Polyurethane 2 mils DFT for a protective top coat.

2 **TIGER Drylac® Series 38 Powdercoating**

The TIGER Drylac SHIELD System is a two-coat process combining optimum corrosion protection with highest weatherability. The basis for the excellent corrosion resistance is either TIGER Drylac Zinc Rich Primer 69/90500, TIGER Drylac Dryprotective Primer 69/70000, or TIGER Drylac 09/73841 Out-gassing Forgiving Primer. This two coat system warrants an optimum non-porous film as well as excellent UV protection through the use of high quality polyester powder coatings.

All specified project applications here-in MUST be the TIGER Drylac two-coat process. *The TIGER Drylac Series 38 Super Durable Polyester single powder coating is NOT acceptable, unless specifically identified within the sign drawing(s).*

a) Pretreatment: Mechanically clean and chemically pretreat fabricated items in accordance with coating manufacturer's requirements and AAMA 2604–05 requirements for finish indicated.

b) **Powdercoating shall be applied by a Tiger-approved applicator ONLY.** Apply primer and finish coats in accordance with coating manufacturer's requirements for finish indicated.

1) Theoretical Coverage: at 1.5 specific gravity and 2.5 mils (60 um) film thickness: 30.2 ft^2/lb (9.8 m^2/kg).

2) Refer also to the latest edition of "Theoretic Powder Coating Coverage Chart". Version 00-1001 (imperial).

F Pressure Sensitive Vinyl Legends

1 Use **3M High Intensity Prismatic Reflective Sheeting Series 3930,** with **3M ElectroCut Film 1170 overlaminate.**

a) Custom color background and characters printed with 3M inks directly.

b) Series 3930 sheeting incorporates a pressure sensitive adhesive and should be applied to the sign substrate at temperature of 65˚F/18˚C or higher by any of the following methods:

1) Mechanical squeeze roll applicator – refer to 3M Information Folder (IF) 1.4 for more details.

2) Hand squeeze roll applicator – refer to 3M IF 1.6 for more details.

c) Splices: Series 3930 sheeting must be butt spliced when more than one piece of sheeting is used on one piece of substrate. The sheeting pieces should not touch each other. This is to prevent buckling as the sheet expands in extreme temperature and humidity exposure.

d) For traffic sign use, substrates found to be most reliable and durable are properly prepared aluminum sheets and extrusions. Plastic substrates are NOT acceptable.

e) High intensity prismatic sheeting may be processed into traffic signs by any of the imaging methods describe below:

1) Screen Processing: Series 3930 sheeting may be screen processed into traffic signs before or after mounting on a sign substrate, using 3M Process Colors Series 880I or Series 880N. Refer to 3M IF 1.8 for more details.

2) Thermal Transfer Printing: Series 3930 sheeting may be imaged with 3M Thermal Transfer Ribbon Series TTR2300 in conjunction with the Matan SprinG3 or Matan Spot4 thermal transfer printers. Additionally, series 3930 sheeting may be imaged by the Durst RHO 161 TS printer, by Sherine Industries: (604) 513-1887. All applications utilizing the above printers must be covered with 3M ElectroCut Film 1170 Clear UV/ Anti-Graffiti overlaminate.

3) 3M ElectroCut Film Series 1170 may be used to provide transparent colored background copy for traffic control signs on high intensity prismatic sheeting. Both materials then must be covered with 3M ElectroCut Film 1170 Clear UV/Anti-Graffiti overlaminate. Refer to Product Bulleting 1170 for fabrication procedures.

4) Vinyl Graphic Films: Scotchcal Vinyl Series 7720 and Series 7725 may be used to provide copy for traffic control signs on high intensity prismatic sheeting. Both materials then must be covered with 3M ElectroCut Film 1170 Clear UV/Anti-Graffiti overlaminate. Refer to Scotchcal product literature for more information.

f) All of the above methods utilizing series 3930 reflective sheeting must be warranted for a period of eight (8) years and shall not excessively fade, discolor, crack, craze, peel, blister or lose reflectivity such that the signs become visually unsuitable for their intended purpose.

2 Use **3M Scotchcal brand graphic film.** Material shall consist of a tough, flexible, and pigmented vinyl film and shall be processed with compatible screen printing inks and clear coatings as recommended by the film manufacturer. The film shall be precoated with pressure-sensitive adhesive. The adhesive shall be protected by a treated paper liner which shall be easily removable without soaking in water or other solvents. The sheeting shall be guaranteed against delamination for a period of 5 years.

3 Use **3M Scotchlite brand reflective graphic film.** Material shall consist of transparent plastic having a smooth, flat outer surface embedded with spherical lens elements. Material shall be capable to being processed with compatible screen printing inks and clear coatings as recommended by the film manufacturer. The film shall be precoated with pressure-sensitive adhesive. The adhesive shall be protected by a treated paper liner which shall be easily removable without soaking in water or other solvents. The sheeting shall be guaranteed against delamination for a period of 5 years.

G Concrete

1 All concrete footers are to be poured in place.

2 All concrete footers are to be poured from thoroughly mixed and agitated concrete in order to prevent unreasonable voids in the finished casting.

3 Concrete to meet specified "PSI testing" for strength: 3500 PSI minimum.

4 Concrete to meet specified "slump test" before pouring footing.

5 All footings to extend past the frost line.

6 Any footers or posts for signs will be placed in wet concrete and allowed to fully cure in place before any signage is attached or mounted to it in any way.

7 All exposed surfaces of concrete shall receive a finish to match existing, adjacent surfaces.

8 Do NOT chamfer corners or edges of concrete, unless specifically identified, or called out in the sign drawings.

9 Smooth-Formed Finished Concrete: Form-facing panels that will provide continuous, true, and smooth concrete surfaces. Furnish in largest practicable sizes to minimize number of joints.

a) Plywood, metal, or other approved panel materials.

b) Exterior-grade plywood panels, suitable for concrete forms, complying with DOC PS 1.

H Breakaway post: Manufacturer shall provide breakaway posts for the sign types and locations indicated in the documentation drawings. Final designs and shop drawings shall be supplied by the fabricator for each of the poles identified. A Professional Engineer shall sign and seal the submittal of shop drawings. The breakaway post shall meet or exceed the following criteria:

NOTES:
1. Fabricator to verify the mounting conditions and provide a detail drawing for each mounting situation, prior to fabrication. Fabricator must obtain approval from the Designer or Client for placement prior to fabrication.
2. Welds: All welds shall be ground smooth, paint all seams.
3. Hardware: All exposed hardware shall be tamper proof fasteners.
4. All exposed edges painted to match adjacent face.

ENVIRONMENTS & EXPERIENCES

merje

120 North Church Street
Suite 208
West Chester, PA 19380
T 484.266.0648
www.merjedesign.com

DATE 09/29/2014

DRAWN BY: PR

These drawings are meant for DESIGN INTENT ONLY and are not for construction. Contractor shall verify and be responsible for all dimensions and conditions of the job. Contractor shall be familiar with the site and conditions it presents. This office must be notified of any variations from the dimensions and conditions shown on this drawing. Shop drawings and details must be submitted to this office for approval prior to proceeding with fabrication. All copy shall be proofread by client and legal requirements checked by legal department.

REVISIONS

CLIENT / PROJECT

CITY OF BENTONVILLE
Bentonville, Arkansas
Wayfinding and Signage System

PROJECT NO. Y41.08062.000

SHEET TITLE

Performance Specifications

SHEET NO.

G.4

PART 2 – PRODUCTS *continued*

1 Most Current policy on Geometric Design of Highway and Streets.

2 Most Current Standard Specification for Structural supports for Highway Signs, Luminaries and Traffic Signals.

3 Most Current AASHTO Roadside Design Guide.

I **Adhesive tape:** Use closed-cell foam type tape with adhesive surfaces on both faces. Thicknesses and widths of tapes shall be as required to safely secure signs to various wall finishes, but in no case shall be less than 1/16 inch thick and 1/2 inch wide. Adhesive tape shall be equal to Norton Sealant Tape No. 1001 Series.

J **Liquid adhesive:** Use Silicone Silastic 732 RTV adhesive sealant as manufactured by Dow Corning.

2.05 FABRICATION

A **Report any discrepancies** between drawings, specifications and owner requirements, and request direction from owner before proceeding.

B **Verify measurements** in field as required for work fabricated to fit job conditions. Before starting work, examine adjoining work on which work of this section is in any way dependent for perfect workmanship and fit.

C **Make work in ample time** not to delay job progress and deliver to job at such time as required for proper coordination. Fabricate work true to line and detail with clean, sharply defined profiles. Finish surfaces smooth unless otherwise specified.

D **Do cutting, punching, drilling and tapping required** for attachment or other work coming in contact with signage work where indicated.

E **Changeability:** Fabricate signs in such a manner that each of the major mounting components may be removed and replaced with similar components by maintenance personnel, but not by unauthorized personnel.

F **Construction:** Fabricate all joints, corners, miters, etc., with work accurately machined, filed and fitted, rigidly framed together at joints and contact points. Carefully match all work to provide a perfect continuity of lines and design, with metal in contact having hairline joints. Make joints of such character and assembly to be strong and as rigid as adjoining sections. Make exposed joints where joint is least conspicuous. Corners shall be square as indicated. All edges shall be finished and free of saw marks.

Allow for expansion and contraction of materials from temperature changes, especially when two materials with different coefficients of expansion are used together.

Detail signs to minimize deflection from snow, ice, water and their own weight.

G **Engineering:** The system shall be engineered to eliminate buckling of any members, failure at any points, distortions or other damage. The system shall be engineered to be rigid with minimum deflection and rotation under stress and shall be able to withstand movement, shear and torsional loads. Exposed areas of signs shall not oil can. Signs shall be designed as structurally self-supporting units. The suspension systems and substructure shall be designed by the sign manufacturer to perform in accordance with the contract documents.

H **Connections and accessories:** Weights of connections and accessories shall be adequate to sustain and withstand stresses and strains to which they will be normally subjected.

I **Sign panels - General**

1 Surface finish: Provide surface finishes that are free from lines, mottling, ridges, variations in color, peeling, orange peel, bubbles, pinholes, mottling, crazing, grit and coarse particles. This applies to all methods of fabrication and finishing. Use clear coatings for durability, surface protection, appearance and maintenance.

2 Material: Sign panel material is stated in the schedules under "Notes" and/or "Specifications" and/or on drawings.

3 Opacity: All signs shall have opaque background and opaque graphics, unless specifically noted otherwise.

J **Anchors and fastenings**

1 Mechanical

a) Provide anchors and fasteners required to secure work in place.

b) Surface finish: Do NOT expose fastenings on surface of sign panels unless specifically noted otherwise. Do NOT deform, distort or discolor sign face surfaces by attachment of concealed fastenings.

c) Corrosion resistance: all fastenings shall be non-corrosive and resistant to oxidation or other corrosive action, of the same composition completely through their cross sections, particularly when used below grade. Use highest quality stainless steel hardware and fasteners.

d) Anchors, inserts or fasteners shall be compatible with sign materials, shall not result in galvanic action or chemical interaction of adhesives and shall have demonstrable and sufficient strength for intended use.

e) Steel anchors and fastenings for exterior use shall be galvanized in accordance with ASTM A153.

f) Stability: Fabricate and install signs with fastenings to withstand all actions imposed by use; **90 mph wind** perpendicular to surfaces, water, ice, snow loads and similar forces.

g) Anchor bolts in concrete shall be cast in place. Manufacturer shall furnish instructions for the setting of anchors and bearing plates. Manufacturer shall ascertain that the items are properly set during the process of the work.

h) Color: Secure work with fastenings of same color and finish as the components they secure where they are exposed to view, unless noted otherwise.

i) Security: All exposed fasteners must be vandal resistant and have vandal-proof "spanner" type slots to be removed only with the special driver head.

K **Messages**

The fabricator is responsible for the message layout of all directional messages panels. Fabricator must produce scale drawings of message layouts for review prior to fabrication. Layout spacing and letterheights to be based on typical layout guideline drawing pages.

1 Layout: Typical sign panel layouts are illustrated in the design intent drawings. All messages including braille shall be flush left, unless noted otherwise. Correct line breaks are indicated in the "message" column of the schedule and should be followed exactly. Braille line breaks shall match those of the raised copy.

Any problems in the message layout shall be brought to the attention of the designer for a solution.

2 Fabrication: Execute all signs such that letter forms are true and clean. Letter forms with rounded corners, or chipped, nicked, cut or ragged edges, will not be accepted. This applies to all methods of fabrication and copy application.

3 Copy: Message copy on detail drawings is for layout purposes only. Actual copy is listed in the "message" column of the schedule. Certain copy may be provided later by the owner.

4 Capitalization: Directions for upper and lower case are found in the "message" column of the schedule must be followed exactly.

5 Single- or double-faces: All signs that are double-faced will be noted as such in the drawings and message schedule. For double-faced signs, the message will be indicated as "Side A" and "Side B" or "Side C" and Side D".

L **Surface-applied messages**

1 Reflectivity and specular gloss

a) Non-reflectorized message: 60 degree specular in accordance with ASTM Test D523.

2 Thickness: as indicated in specifications herein.

3 Color and color fastness

a) Exposed surfaces and finishes shall show no discernible color change or chalking when exposed for 1,000 hours in an Atlas Twin Arc Weathermaster Model HCDL-X, or equivalent, when tested in accordance with ASTM D822.

4 Inter letter spacing: Follow examples in drawings. Show sample inter-letter and inter-word spacing in sample submissions as specified.

5 Layout: Positions for all messages, symbols, arrows, lines, etc., for all signs are clearly indicated on the drawings and shall be complied with.

NOTES:
1. Fabricator to verify the mounting conditions and provide a detail drawing for each mounting situation, prior to fabrication. Fabricator must obtain approval from the Designer or Client for placement prior to fabrication.
2. Welds: All welds shall be ground smooth, paint all seams.
3. Hardware: All exposed hardware shall be tamper proof fasteners.
4. All exposed edges painted to match adjacent face.

ENVIRONMENTS & EXPERIENCES

merje

120 North Church Street
Suite 208
West Chester, PA 19380
T 484.266.0648
www.merjedesign.com

DATE 09/29/2014

DRAWN BY: PR

These drawings are meant for DESIGN INTENT ONLY and are not for construction. Contractor shall verify and be responsible for all dimensions and conditions of the job. Contractor shall be familiar with the site and conditions it presents. This office must be notified of any variations from the dimensions and conditions shown on this drawing. Shop drawings and details must be submitted to this office for approval prior to proceeding with fabrication. All copy shall be proofread by client and legal requirements checked by legal department.

REVISIONS

CLIENT / PROJECT

CITY OF BENTONVILLE
Bentonville, Arkansas
Wayfinding and Signage System

PROJECT NO. Y41.08062.000

SHEET TITLE

Performance Specifications

SHEET NO.

G.5

PART 2 – PRODUCTS *continued*

6 Artwork: Contractor shall be responsible for all final reproduction artwork for all messages, symbols, arrows, lines, and location plan and/or floor plan drawings.

7 Fabrication

a) Screened messages: Execute all silk screen printing in such a manner that all edges and corners of finished letter forms are true and clean. Letter forms, color areas or lines with rounded corners, edge buildup or bleeding, sawtoothing, etc., will not be accepted. Execute all silk screening from photo-screens prepared from typesetter's reproduction of the copy specified. All above work is included is this contract. Hand cut screens will not be acceptable.

b) Die-cut messages: Die-cut, pre-spaced, pre-aligned messages (numbers, words, phrases, and arrows) from 3.0 MIL flexible film coated with continuous adhesive pressure sensitive backing to meet characteristics specified for surface-applied messages. Execute die-cutting in such a manner that all edges and corners of finished letter forms are true and clean. Letter forms with round positive or negative corners, nicked, cut or ragged edges, etc., will not be acceptable.

M **Electrical Components, Devices, and Accessories:** Listed and labeled as defined in NFPA 70, Article 100, by a testing agency acceptable to authorities having jurisdiction, and marked for intended use.

NOTES:
1. Fabricator to verify the mounting conditions and provide a detail drawing for each mounting situation, prior to fabrication. Fabricator must obtain approval from the Designer or Client for placement prior to fabrication.
2. Welds: All welds shall be ground smooth, paint all seams.
3. Hardware: All exposed hardware shall be tamper proof fasteners.
4. All exposed edges painted to match adjacent face.

ENVIRONMENTS & EXPERIENCES
merje
120 North Church Street
Suite 208
West Chester, PA 19380
T 484.266.0648
www.merjedesign.com

DATE 09/29/2014

DRAWN BY: PR

These drawings are meant for DESIGN INTENT ONLY and are not for construction. Contractor shall verify and be responsible for all dimensions and conditions of the job. Contractor shall be familiar with the site and conditions it presents. This office must be notified of any variations from the dimensions and conditions shown on this drawing. Shop drawings and details must be submitted to this office for approval prior to proceeding with fabrication. All copy shall be proofread by client and legal requirements checked by legal department.

REVISIONS

CLIENT / PROJECT
CITY OF BENTONVILLE
Bentonville, Arkansas
Wayfinding and Signage System

PROJECT NO. Y41.08062.000

SHEET TITLE
Performance Specifications

SHEET NO.
G.6

PART 3 – EXECUTION

3.01 INSPECTION

A Examine the substrates and conditions under which the signs are to be installed and notify the owner in writing of conditions detrimental to the proper and timely completion of the work. Do not proceed with the work until unsatisfactory conditions have been corrected.

3.02 INSTALLATION

A Install sign units and components with concealed fasteners, unless otherwise shown. Refer to detail drawings for general method. Verify each surface in field to determine specific, appropriate hardware.

Drawings in this package may not indicate any below-ground or in-wall structural tie-ins or connections that may be necessary to assure stable and secure installation of signs. Sign fabricator is responsible for determining where such connections are necessary and for coordinating with related trades to make them.

B Locations: Refer to drawings for approximate locations. Any discrepancies or apparent deviations from drawing locations because of different site conditions shall be brought to the attention of the owner for solution. The owner must be present for field placement of the sign.

It shall be the responsibility of the Contractor to determine location of underground structures and utilities by the use of test pit excavation prior to excavation operations. Test pits shall be the size, depth and location as approved by the Engineer. Each pit shall be tamp-back-filled. Test pit excavation will be measured on the basis of the volume of material actually removed from within the limits specified. Tamped backfill will not be measured but shall be included in the price bid for test pit excavation.

Price provided shall include all excavation, tamped backfill, labor, tools, equipment and incidentals necessary to complete the installation of each sign.

C For ground-mounted signs, provide whatever replacement concrete, pavers, bricks, etc., are necessary to match adjacent surfaces exactly. Seams should be parallel or perpendicular to sign face and be symmetrical around post(s).

D Note that this area experiences heavy public use. Strong environmental conditions such as weather and vandalism may be routine problems. Signs must be securely mounted. Contractor is responsible for suggesting alternative fabrication or installation methods if required to prevent theft or vandalism.

E Install signs to be level, plumb and at the proper height. Cooperate with other trades for installation of sign units.

F Clean and polish, remove excess adhesive.

G Fixture installation

1 Install lighting fixtures with seals and gaskets. Conceal all wiring in or within the construction.

2 Lamp installation

a) Do not install lamps for permanent use until operating voltage is verified and established.

b) Install lamps in accordance with lamp and fixture manufacturer's instructions.

3 Ballast installation

a) Install ballasts at factory unless specifically indicated otherwise. Mount on rubber grommets or sound isolating details to reduce noise transmission.

3.03 TREE TRIMMING AND PROTECTION

A Include the protection and trimming of trees that interfere with, or are affected by, execution of the Work, whether temporary or new construction.

1 Quality Assurance:

a) Tree Service Qualifications: An experienced tree service firm that has successfully completed tree protection and trimming work similar to that required for this Project and that will assign an experienced, qualified arborist to Project site on a full-time basis during execution of the Work.

b) Arborist Qualifications: An arborist certified by the International Society of Arboriculture or licensed in the jurisdiction where Project is located.

2 Preparation:

a) Install temporary fencing located as indicated or outside the drip line of trees to protect remaining vegetation from construction damage.

b) Protect tree root systems from damage due to noxious materials caused by runoff or spillage while mixing, placing, or storing construction materials. Protect root systems from flooding, eroding, or excessive wetting caused by dewatering operations.

c) Do not store construction materials, debris, or excavated material within the drip line of remaining trees. Do not permit vehicles or foot traffic within the drip line; prevent soil compaction over root systems.

d) Do not allow fires under or adjacent to remaining trees or other plants.

3 Excavation

a) Install shoring or other protective support systems to minimize sloping or benching of excavations.

b) Do not excavate within drip line of trees, unless otherwise indicated.

c) Where excavation for new construction is required within drip line of trees, hand clear and excavate to minimize damage to root systems. Use narrow-tine spading forks and comb soil to expose roots.

1) Relocate roots in backfill areas where possible. If encountering large, main lateral roots, expose roots beyond excavation limits as required to bend and relocate them without breaking. If encountered immediately adjacent to location of new construction and relocation is not practical, cut roots approximately 3 inches back from new construction.

2) Do not allow exposed roots to dry out before placing permanent backfill. Provide temporary earth cover or pack with peat moss and wrap with burlap. Water and maintain in a moist condition. Temporarily support and protect roots from damage until they are permanently relocated and covered with soil.

4 Tree repair and replacement

a) Promptly repair trees damaged by construction operations within 24 hours. Treat damaged trunks, limbs, and roots according to written instructions of the qualified arborist.

b) Remove and replace dead and damaged trees that the qualified arborist determines to be incapable of restoring to a normal growth pattern.

1) Provide new trees of 6-inch caliper size and of a species selected by Designer when trees more than 6 inches in caliper size, measured 12 inches above grade, are required to be replaced.

5 Disposal of waste materials

a) Burning is not permitted.

b) Remove excess excavated material, displaced trees, and excess chips from Owner's property.

3.04 CLEANUP

A Periodically (at least daily) and upon completion of the installation, remove all waste, dirt, wrappings and excess materials, tools and equipment, and carefully and thoroughly clean all surfaces to the satisfaction of the owner.

3.05 PROPERTY DAMAGE

A Protect all adjacent surfaces from damage and pay the cost of repairing any damage to the property caused by delivery or installation of materials. In all cases, match existing surfaces.

NOTES:
1. Fabricator to verify the mounting conditions and provide a detail drawing for each mounting situation, prior to fabrication. Fabricator must obtain approval from the Designer or Client for placement prior to fabrication.
2. Welds: All welds shall be ground smooth, paint all seams.
3. Hardware: All exposed hardware shall be tamper proof fasteners.
4. All exposed edges painted to match adjacent face.

ENVIRONMENTS & EXPERIENCES
merje
120 North Church Street
Suite 208
West Chester, PA 19380
T 484.266.0648
www.merjedesign.com

DATE 09/29/2014

DRAWN BY: PR

These drawings are meant for DESIGN INTENT ONLY and are not for construction. Contractor shall verify and be responsible for all dimensions and conditions of the job. Contractor shall be familiar with the site and conditions it presents. This office must be notified of any variations from the dimensions and conditions shown on this drawing. Shop drawings and details must be submitted to this office for approval prior to proceeding with fabrication. All copy shall be proofread by client and legal requirements checked by legal department.

REVISIONS

CLIENT / PROJECT

CITY OF BENTONVILLE
Bentonville, Arkansas
Wayfinding and Signage System

PROJECT NO. Y41.08062.000

SHEET TITLE

Performance Specifications

SHEET NO.

G.7

City of Bentonville, Arkansas Agenda Item Form

Item Details

Council Meeting Date:	8/27/2024	**Submitted By:**	Shelli Kerr
Phone:	479-271-6822	**For Department(s):**	Planning, Bentonville Public Library
Email:	skerr@bentonvillear.com		

Item Type (Check all that apply)

☐ **Informational** ☐ **Bid Award** ☐ **Enter into an Agreement** ☐ **Change Order**
☐ **Recognizing Funds** ☐ **Budget Adjustment** ☐ **Waiver of Bid** ☐ **Emergency Clause**
☐ **Ordinance** ☑ **Resolution** ☐ **Informational**

Title, Recommendation & Justification

Title:	Resolution Endorsing a Temporary OZ Art Loan to Bentonville Public Library - Alchemist Table
Action Recommendation & Justification:	A resolution endorsing the temporary installation of Paul Gillis' artwork, Alchemist Table (Distillation), in the Bentonville Public Library (BPL) on a one-year loan from OZ Art, LLC. No budget adjustment is needed.
Additional Comments for Consideration (Optional):	OZ Art will be responsible for installing, insuring, maintaining, and deinstalling the artwork. This artwork was recommended unanimously by the Bentonville Public Library Advisory Board on Aug. 6, 2024, and unanimously by the PAAC on Aug. 13, 2024. There is no cost to the city. Memo attached.
Amount for Approval:	$

Budget Impact

Is this Item Budgeted? ☐ **YES** ☐ **NO** ☑ **ITEM HAS NO COST** ☐ **OTHER:**_____

Budget Adjustment *(to be completed by Finance when applicable)*

		$	$
Account Number (ORG-OBJECT)	Account Description	Expense	Revenue
		$	$
Account Number (ORG-OBJECT)	Account Description	Expense	Revenue
		$	$
Account Number (ORG-OBJECT)	Account Description	Expense	Revenue
		$	$
Account Number (ORG-OBJECT)	Account Description	Expense	Revenue

Fund(s) Impacted (check all that apply) ☐ **General Fund** ☐ **Utility Fund** ☐ **Street Fund** ☐ **Other(s):**_____

Budget Impact Notes for Consideration (Optional):

MEMO

To: Mayor Stephanie Orman and Bentonville City Council

From: Shelli Kerr, AICP, Comprehensive Planning Manager

On behalf of: Bentonville Public Art Advisory Committee and Bentonville Public Library

CC date: August 27, 2024

RE: OZ Art Loan of Artwork to Bentonville Public Library – *Alchemist Table (Distillation)*

Request. Approval of a resolution to install Paul Gillis' artwork, *Alchemist Table (Distillation),* in the Bentonville Public Library (BPL) on a one-year loan from OZ Art, LLC.

Description. The artist begins by using roughly textured, dyed, and heavily woven burlap. Gillis applies thin washes of gesso then approaches his canvases with graphite, drawing hundreds and sometimes thousands of lines that crisscross and crosshatch his work to form the figurative elements or shadows of each piece. There is a flatness of the image from a distance, but up close you see the texture and dimensionality.

Gillis uses both paint and graphite to create subtle yet graphic paintings. He explores the junction of drawing and painting, figuration and abstraction, creating an interplay of light, negative space, and image.

Selected for the library for its complex process, educational opportunities about negative space, composition, and the sciences.

Year: 2013. *Medium:* Graphite and gesso on canvas. *Size:* 60.125 x 48.125 x 1.875".

Display Site. The proposed display site is inside the Bentonville Public Library at a location to be mutually agreed upon between OZ Art and BPL which will be determined closer to date of install. OZ Art will provide signage with the title, artist and narrative description of the artwork.

Display Period. This is a temporary display that will be on-loan from OZ Art LLC for one-year from the date of installation.

Funding. OZ Art is lending the artwork to the city at no charge. As the owner of the artwork, OZ Art is responsible for installing, insuring, maintaining and de-installing the artwork. There is no cost to the city.

Recommendation. This artwork was recommended unanimously by the Bentonville Public Library Advisory Board on Aug. 6, 2024, and unanimously by the PAAC on Aug. 13, 2024.

RESOLUTION NO. _____

A RESOLUTION TO INSTALL PAUL GILLIS' ARTWORK, *ALCHEMIST TABLE (DISTALLATION),* IN THE BENTONVILLE PUBLIC LIBRARY ON A ONE-YEAR LOAN FROM OZ ART, LLC AT NO COST TO THE CITY; AND FOR OTHER PURPOSES.

WHEREAS, the City Council of the City of Bentonville has established the importance of integrating public art into the daily lives of the citizens of Bentonville by adopting a Public Art Policy with Ordinance No. 2013 – 40 on May 14, 2013;

WHEREAS, OZ Art, LLC proposes to lend artwork to the City of Bentonville for display in the Bentonville Public Library for one year at no charge to the City; and

WHEREAS, the artwork was recommended unanimously by the Bentonville Public Library Advisory Board on Aug. 6, 2024, and unanimously by the PAAC on Aug. 13, 2024.

NOW, THEREFORE, BE IT RESOLVED BY THE CITY COUNCIL OF THE CITY OF BENTONVILLE, ARKANSAS:

Section 1: That the City Council of the City of Bentonville, Arkansas hereby agrees to install Paul Gillis' artwork, *Alchemist Table (Distillation),* in the Bentonville Public Library on a one-year loan from OZ Art, LLC;

Section 2: That OZ Art, LLC, owner of the artwork, will lend the artwork to the City of Bentonville for one-year at no cost to the City;

Section 3: That OZ Art, LLC, owner of the artwork, will be responsible for installing, insuring, maintaining, and deinstalling the artwork;

Section 4 - Severability Provision: If any part of this Resolution is held invalid, the remainder of this Resolution shall continue in effect as if such invalid portion never existed; and

Section 5 - Repeal of Conflicting Provisions: All Ordinances, Resolutions, or Orders of the City Council, or parts of the same, in conflict with this Resolution are repealed to the extent of such conflict.

PASSED and APPROVED this ___ day of _____, 2024.

APPROVED:

_____
Stephanie Orman, Mayor

ATTEST:

_____
Malorie Marrs, City Clerk

City of Bentonville, Arkansas Agenda Item Form

Item Details

Council Meeting Date:	8/27/2024	**Submitted By:**	Shelli Kerr
Phone:	479-271-6822	**For Department(s):**	Planning, Bentonville Public Library
Email:	skerr@bentonvillear.com		

Item Type (Check all that apply)

☐ **Informational** ☐ **Bid Award** ☐ **Enter into an Agreement** ☐ **Change Order**
☐ **Recognizing Funds** ☐ **Budget Adjustment** ☐ **Waiver of Bid** ☐ **Emergency Clause**
☐ **Ordinance** ☑ **Resolution** ☐ **Informational**

Title, Recommendation & Justification

Title:	Resolution for an OZ Art Loan to Bentonville Public Library - Untitled Prototype #4 (DIRTY GLOVES)
Action Recommendation & Justification:	A resolution endorsing the temporary installation of Amanda Ross-Ho's artwork, Untitled Prototype #4 (DIRTY GLOVES), in the Bentonville Public Library (BPL) on a one-year loan from OZ Art, LLC. No budget adjustment is needed.
Additional Comments for Consideration (Optional):	OZ Art will be responsible for installing, insuring, maintaining and deinstalling the artwork. This artwork was recommended unanimously by the Bentonville Public Library Advisory Board on Aug. 6, 2024, and unanimously by the PAAC on Aug. 13, 2024. There is no cost to the city. Memo attached.
Amount for Approval:	$

Budget Impact

Is this Item Budgeted? ☐ **YES** ☐ **NO** ☑ **ITEM HAS NO COST** ☐ **OTHER:**_____

Budget Adjustment *(to be completed by Finance when applicable)*

Account Number (ORG-OBJECT)	Account Description	Expense	Revenue
		$	$
		$	$
		$	$
		$	$

Fund(s) Impacted (check all that apply) ☐ **General Fund** ☐ **Utility Fund** ☐ **Street Fund** ☐ **Other(s):**_____

Budget Impact Notes for Consideration (Optional):

MEMO

To: Mayor Stephanie Orman and Bentonville City Council

From: Shelli Kerr, AICP, Comprehensive Planning Manager

On behalf of: Bentonville Public Art Advisory Committee and Bentonville Public Library

CC date: August 27, 2024

RE: OZ Art Loan of Artwork to Bentonville Public Library – *Untitled Prototype #4 (DIRTY GLOVES)*

Request. Approval of a resolution to install Amanda Ross-Ho's artwork, *Untitled Prototype #4 (DIRTY GLOVES),* in the Bentonville Public Library (BPL) on a one-year loan from OZ Art, LLC.

Description. Two, larger-than-life gloves the artist made from canvas, sprinkled with colorful acrylic paint on the fingertips. The artist wears gloves when she paints and takes delight in seeing the fun array of colors on her fingertips after finishing a painting and sees them sometimes as their own work of art. This led her to make large scale gloves that mimic her own gloves and artistic process.

Ross-Ho's work examines the ecologies of labor and time. She takes the ideas and familiarity of everyday objects and aims to ascribe new meaning through surroundings and taxonomy.

Selected for the library because of how the work invites curiosity and inquiry. It may inspire viewers to paint, start a garden, or use their hands in creative ways.

Year: 2018. *Medium*: Acrylic on canvas, cotton piping, and thread. *Size*: 28 x 36".

Display Site. The proposed display site is inside the Bentonville Public Library at a location to be mutually agreed upon between OZ Art and BPL which will be determined closer to date of install. OZ Art will provide signage with the title, artist and narrative description of the artwork.

Display Period. This is a temporary display that will be on-loan from OZ Art LLC for one-year from the date of installation.

Funding. OZ Art is lending the artwork to the city at no charge. As the owner of the artwork, OZ Art is responsible for installing, insuring, maintaining and de-installing the artwork. There is no cost to the city.

Recommendation. This artwork was recommended unanimously by the Bentonville Public Library Advisory Board on Aug. 6, 2024, and unanimously by the PAAC on Aug. 13, 2024.

RESOLUTION NO. _____

A RESOLUTION TO INSTALL AMANDA ROSS-HO'S ARTWORK, *UNTITLED PROTOTYPE #4 (DIRTY GLOVES),* IN THE BENTONVILLE PUBLIC LIBRARY ON A ONE-YEAR LOAN FROM OZ ART, LLC AT NO COST TO THE CITY; AND FOR OTHER PURPOSES.

WHEREAS, the City Council of the City of Bentonville has established the importance of integrating public art into the daily lives of the citizens of Bentonville by adopting a Public Art Policy with Ordinance No. 2013 – 40 on May 14, 2013;

WHEREAS, OZ Art, LLC proposes to lend artwork to the City of Bentonville for display in the Bentonville Public Library for one year at no charge to the City; and

WHEREAS, the artwork was recommended unanimously by the Bentonville Public Library Advisory Board on Aug. 6, 2024, and unanimously by the PAAC on Aug. 13, 2024.

NOW, THEREFORE, BE IT RESOLVED BY THE CITY COUNCIL OF THE CITY OF BENTONVILLE, ARKANSAS:

Section 1: That the City Council of the City of Bentonville, Arkansas hereby agrees to install Amanda Ross-Ho's artwork, *Untitled Prototype #4 (Dirty Gloves),* in the Bentonville Public Library on a one-year loan from OZ Art, LLC;

Section 2: That OZ Art, LLC, owner of the artwork, will lend the artwork to the City of Bentonville for one-year at no cost to the City;

Section 3: That OZ Art, LLC, owner of the artwork, will be responsible for installing, insuring, maintaining, and deinstalling the artwork;

Section 4 - Severability Provision: If any part of this Resolution is held invalid, the remainder of this Resolution shall continue in effect as if such invalid portion never existed; and

Section 5 - Repeal of Conflicting Provisions: All Ordinances, Resolutions, or Orders of the City Council, or parts of the same, in conflict with this Resolution are repealed to the extent of such conflict.

PASSED and APPROVED this ____ day of _____, 2024.

APPROVED:

_____
Stephanie Orman, Mayor

ATTEST:

_____
Malorie Marrs, City Clerk

City of Bentonville, Arkansas Agenda Item Form

Item Details

Council Meeting Date:	8/27/2024	**Submitted By:**	Shelli Kerr
Phone:	479-271-6822	**For Department(s):**	Planning, Bentonville Public Library
Email:	skerr@bentonvillear.com		

Item Type (Check all that apply)

☐ **Informational** ☐ **Bid Award** ☐ **Enter into an Agreement** ☐ **Change Order**
☐ **Recognizing Funds** ☐ **Budget Adjustment** ☐ **Waiver of Bid** ☐ **Emergency Clause**
☐ **Ordinance** ☑ **Resolution** ☐ **Informational**

Title, Recommendation & Justification

Title:	Resolution for a Temporary Installation of an OZ Art Loan to Bentonville Public Library - Double Dutch
Action Recommendation & Justification:	A resolution to temporarily install Robin Rhode's artwork, Double Dutch, in the Bentonville Public Library (BPL) on a one-year loan from OZ Art, LLC. No budget adjustment is needed.
Additional Comments for Consideration (Optional):	OZ Art will be responsible for installing, insuring, maintaining and deinstalling the artwork. This artwork was recommended unanimously by the Bentonville Public Library Advisory Board on Aug. 6, 2024, and unanimously by the PAAC on Aug. 13, 2024. There is no cost to the city. Memo attached.
Amount for Approval:	$

Budget Impact

Is this Item Budgeted? ☐ **YES** ☐ **NO** ☑ **ITEM HAS NO COST** ☐ **OTHER:**_____

Budget Adjustment *(to be completed by Finance when applicable)*

Account Number (ORG-OBJECT)	Account Description	Expense	Revenue
		$	$
		$	$
		$	$
		$	$

Fund(s) Impacted (check all that apply) ☐ **General Fund** ☐ **Utility Fund** ☐ **Street Fund** ☐ **Other(s):**_____

Budget Impact Notes for Consideration (Optional):

MEMO

To: Mayor Stephanie Orman and Bentonville City Council

From: Shelli Kerr, AICP, Comprehensive Planning Manager

On behalf of: Bentonville Public Art Advisory Committee and Bentonville Public Library

CC date: August 27, 2024

RE: OZ Art Loan of Artwork to Bentonville Public Library – *Double Dutch*

Request. Approval of a resolution to install Robin Rhode's artwork, *Double Dutch,* in the Bentonville Public Library (BPL) on a one-year loan from OZ Art, LLC.

Description. Black and white photographic series that reimagines the rope game that has been popularized over many years on schoolyards, playgrounds, and public spaces the world over. The lines of the rope are represented here by black curves that are painted on the wall and then the artist dresses themselves in all black and poses and jumps in the frame. The work must be hung in this order as it generates an almost animated effect within the margins of the picture plane.

Selected for library for its interpretation of play, games, and nostalgia.

Year: 2016. *Medium:* C-print. *Size:* Framed, 16.44 x 24.25 x 1.5" (each).

Display Site. The proposed display site is inside the Bentonville Public Library at a location to be mutually agreed upon between OZ Art and BPL which will be determined closer to date of install. OZ Art will provide signage with the title, artis and narrative description of the artwork.

Display Period. The proposed display site is inside the Bentonville Public Library at a location to be mutually agreed upon between OZ Art and BPL which will be determined closer to date of install. OZ Art will provide signage with the title, artist and narrative description of the artwork.

Funding. OZ Art is lending the artwork to the city at no charge. As the owner of the artwork, OZ Art is responsible for installing, insuring, maintaining and de-installing the artwork. There is no cost to the city.

Recommendation. This artwork was recommended unanimously by the Bentonville Public Library Advisory Board on Aug. 6, 2024, and unanimously by the PAAC on Aug. 13, 2024.

RESOLUTION NO. _____

A RESOLUTION TO INSTALL ROBIN RHODE'S ARTWORK, *DOUBLE DUTCH,* IN THE BENTONVILLE PUBLIC LIBRARY ON A ONE-YEAR LOAN FROM OZ ART, LLC AT NO COST TO THE CITY; AND FOR OTHER PURPOSES.

WHEREAS, the City Council of the City of Bentonville has established the importance of integrating public art into the daily lives of the citizens of Bentonville by adopting a Public Art Policy with Ordinance No. 2013 – 40 on May 14, 2013;

WHEREAS, OZ Art, LLC proposes to lend artwork to the City of Bentonville for display in the Bentonville Public Library for one year at no charge to the City; and

WHEREAS, the artwork was recommended unanimously by the Bentonville Public Library Advisory Board on Aug. 6, 2024, and unanimously by the PAAC on Aug. 13, 2024.

NOW, THEREFORE, BE IT RESOLVED BY THE CITY COUNCIL OF THE CITY OF BENTONVILLE, ARKANSAS:

Section 1: That the City Council of the City of Bentonville, Arkansas hereby agrees to install Robin Rhode's artwork, *Double Dutch,* in the Bentonville Public Library on a one-year loan from OZ Art, LLC;

Section 2: That OZ Art, LLC, owner of the artwork, will lend the artwork to the City of Bentonville for one-year at no cost to the City;

Section 3: That OZ Art, LLC, owner of the artwork, will be responsible for installing, insuring, maintaining, and deinstalling the artwork;

Section 4 - Severability Provision: If any part of this Resolution is held invalid, the remainder of this Resolution shall continue in effect as if such invalid portion never existed; and

Section 5 - Repeal of Conflicting Provisions: All Ordinances, Resolutions, or Orders of the City Council, or parts of the same, in conflict with this Resolution are repealed to the extent of such conflict.

PASSED and APPROVED this ____ day of _____, 2024.

APPROVED:

_____
Stephanie Orman, Mayor

ATTEST:

_____
Malorie Marrs, City Clerk

City of Bentonville, Arkansas Agenda Item Form

Item Details

Council Meeting Date:	8/27/2024	**Submitted By:**	Shelli Kerr
Phone:	479-271-6822	**For Department(s):**	Planning, Bentonville Public Library
Email:	skerr@bentonvillear.com		

Item Type (Check all that apply)

☐ **Informational** ☐ **Bid Award** ☐ **Enter into an Agreement** ☐ **Change Order**
☐ **Recognizing Funds** ☐ **Budget Adjustment** ☐ **Waiver of Bid** ☐ **Emergency Clause**
☐ **Ordinance** ☑ **Resolution** ☐ **Informational**

Title, Recommendation & Justification

Title:	Resolution for an OZ Art Loan to Bentonville Public Library - Embroidered Quilt with Earthworms...
Action Recommendation & Justification:	A resolution to install Daniel Dewar's and Grégory Gicquel's artwork, Embroidered Quilt with Earthworms..., in the Bentonville Public Library (BPL) on a one-year loan from OZ Art, LLC. No budget adjustment is needed.
Additional Comments for Consideration (Optional):	OZ Art will be responsible for installing, insuring, maintaining and deinstalling the artwork. This artwork was recommended unanimously by the Bentonville Public Library Advisory Board on Aug. 6, 2024, and unanimously by the PAAC on Aug. 13, 2024. There is no cost to the city. Memo attached.
Amount for Approval:	$

Budget Impact

Is this Item Budgeted? ☐ **YES** ☐ **NO** ☑ **ITEM HAS NO COST** ☐ **OTHER:**_____

Budget Adjustment *(to be completed by Finance when applicable)*

Account Number (ORG-OBJECT)	Account Description	Expense	Revenue
		$	$
		$	$
		$	$
		$	$

Fund(s) Impacted (check all that apply) ☐ **General Fund** ☐ **Utility Fund** ☐ **Street Fund** ☐ **Other(s):**_____

Budget Impact Notes for Consideration (Optional):

MEMO

To: Mayor Stephanie Orman and Bentonville City Council

From: Shelli Kerr, AICP, Comprehensive Planning Manager

On behalf of: Bentonville Public Art Advisory Committee and Bentonville Public Library

CC date: August 27, 2024

RE: OZ Art Loan of Artwork to Bentonville Public Library – *Embroidered Quilt with Earthworms…*

Request. Approval of a resolution to install Daniel Dewar's and Grégory Gicquel's artwork, "*Embroidered Quilt with Earthworms…*", in the Bentonville Public Library (BPL) on a one-year loan from OZ Art, LLC.

Description. Embroidered quilt with earthworms, bramble plant, hebe tiger moth, magpie moth, green stink bug, striped shield bug, green bottle flies, red-tailed bumblebees, white-tailed bumblebees, honeybees and sewing machine.

This British-French artist duo are known for their works that explore the relationship between labor and production, and blurring boundaries between animate and inanimate realms. Their multidisciplinary practice incorporates traditional craft techniques and classical sculpture and engages with manufacturing processes that have become less visible in the age of automation.

This work is a quilt, which can honor the long quilting tradition in the Ozarks and demonstrates how "craft" can be art. It will also invite curiosity about the plants, bugs, worms, and perhaps even the sewing machine and the role of the sewing machine in the making of the artwork.

Year: 2023. *Medium:* Cotton and polyester thread on linen fabric and cotton batting. *Size:* 65" x 76.75"

Display Site. The proposed display site is inside the Bentonville Public Library at a location to be mutually agreed upon between OZ Art and BPL which will be determined closer to date of install. OZ Art will provide signage with the title, artist and narrative description of the artwork.

Display Period. This is a temporary display that will be on-loan from OZ Art LLC for one-year from the date of installation.

Funding. OZ Art is lending the artwork to the city at no charge. As the owner of the artwork, OZ Art is responsible for installing, insuring, maintaining and de-installing the artwork. There is no cost to the city.

Recommendation. This artwork was recommended unanimously by the Bentonville Public Library Advisory Board on Aug. 6, 2024, and unanimously by the PAAC on Aug. 13, 2024.

RESOLUTION NO. _____

A RESOLUTION TO INSTALL DANIEL DEWAR'S AND GRÉGORY GICQUEL'S ARTWORK, *EMBROIDERED QUILT WITH EARTHWORMS…*, IN THE BENTONVILLE PUBLIC LIBRARY ON A ONE-YEAR LOAN FROM OZ ART, LLC AT NO COST TO THE CITY; AND FOR OTHER PURPOSES.

WHEREAS, the City Council of the City of Bentonville has established the importance of integrating public art into the daily lives of the citizens of Bentonville by adopting a Public Art Policy with Ordinance No. 2013 – 40 on May 14, 2013;

WHEREAS, OZ Art, LLC proposes to lend artwork to the City of Bentonville for display in the Bentonville Public Library for one year at no charge to the City; and

WHEREAS, the artwork was recommended unanimously by the Bentonville Public Library Advisory Board on Aug. 6, 2024, and unanimously by the PAAC on Aug. 13, 2024.

NOW, THEREFORE, BE IT RESOLVED BY THE CITY COUNCIL OF THE CITY OF BENTONVILLE, ARKANSAS:

Section 1: That the City Council of the City of Bentonville, Arkansas hereby agrees to install Daniel Dewar's and Grégory Gicquel's artwork, *Embroidered Quilt with Earthworms…,* in the Bentonville Public Library on a one-year loan from OZ Art, LLC;

Section 2: That OZ Art, LLC, owner of the artwork, will lend the artwork to the City of Bentonville for one-year at no cost to the City;

Section 3: That OZ Art, LLC, owner of the artwork, will be responsible for installing, insuring, maintaining, and deinstalling the artwork;

Section 4 - Severability Provision: If any part of this Resolution is held invalid, the remainder of this Resolution shall continue in effect as if such invalid portion never existed; and

Section 5 - Repeal of Conflicting Provisions: All Ordinances, Resolutions, or Orders of the City Council, or parts of the same, in conflict with this Resolution are repealed to the extent of such conflict.

PASSED and APPROVED this ____ day of _____, 2024.

APPROVED:

_____

Stephanie Orman, Mayor

ATTEST:

_____

Malorie Marrs, City Clerk

City of Bentonville, Arkansas Agenda Item Form

Item Details

Council Meeting Date:	8/27/2024	**Submitted By:**	Shelli Kerr
Phone:	479-271-6822	**For Department(s):**	Planning, Bentonville Public Library
Email:	skerr@bentonvillear.com		

Item Type (Check all that apply)

☐ **Informational** ☐ **Bid Award** ☐ **Enter into an Agreement** ☐ **Change Order**
☐ **Recognizing Funds** ☐ **Budget Adjustment** ☐ **Waiver of Bid** ☐ **Emergency Clause**
☐ **Ordinance** ☑ **Resolution** ☐ **Informational**

Title, Recommendation & Justification

Title:	Resolution for an OZ Art Loan to Bentonville Public Library - Tegyu and Terrin (blue)
Action Recommendation & Justification:	A resolution to install Claire Tabouret's artwork, Tegyu and Terrin (blue), in the Bentonville Public Library (BPL) on a one-year loan from OZ Art, LLC. No budget adjustment is needed.
Additional Comments for Consideration (Optional):	OZ Art will be responsible for installing, insuring, maintaining, and deinstalling the artwork. This artwork was recommended unanimously by the Bentonville Public Library Advisory Board on Aug. 6, 2024, and unanimously by the PAAC on Aug. 13, 2024. There is no cost to the city. Memo attached.
Amount for Approval:	$

Budget Impact

Is this Item Budgeted? ☐ **YES** ☐ **NO** ☑ **ITEM HAS NO COST** ☐ **OTHER:**_____

Budget Adjustment *(to be completed by Finance when applicable)*

Account Number (ORG-OBJECT)	Account Description	Expense	Revenue
		$	$
		$	$
		$	$
		$	$

Fund(s) Impacted (check all that apply) ☐ **General Fund** ☐ **Utility Fund** ☐ **Street Fund** ☐ **Other(s):**_____

Budget Impact Notes for Consideration (Optional):

MEMO

To: Mayor Stephanie Orman and Bentonville City Council

From: Shelli Kerr, AICP, Comprehensive Planning Manager

On behalf of: Bentonville Public Art Advisory Committee and Bentonville Public Library

CC date: August 27, 2024

RE: OZ Art Loan of Artwork to Bentonville Public Library – *Tegyu and Terrin (blue)*

Request. Approval of a resolution to install Claire Tabouret's artwork, *Tegyu and Terrin (blue),* in the Bentonville Public Library (BPL) on a one-year loan from OZ Art, LLC.

Description. Two siblings seem to be in an ambiguous, quiet space – but you can tell there is a magic to the moment that causes the elder sister to smile at her bother. The artist has followed these siblings, Tegyu and Terrin, and depicts their different feelings, and relationship as siblings over time.

Claire Tabouret's is known for her enigmatic portraiture of group scenes that can range from the theatrical to the introspective. Her figures alternately wrestle, dance, perform, and enjoy quiet moments of solitude. Her work explores notions of identity and takes a closer look at childhood and its enigmas---the individual isolated or within a group. Tabouret is motivated by a sensitivity to the passing of time and the floodgates of vulnerability opened by human relationships.

Picked for Library Pick for its emphasis on youthfulness, diversity, childhood, siblinghood, and friendship.

Year: 2020. *Medium:* Acrylic on wood panel. *Size:* 30 x 40 x 2.125 ″

Display Site. The proposed display site is inside the Bentonville Public Library at a location to be mutually agreed upon between OZ Art and BPL which will be determined closer to date of install. OZ Art will provide signage with the title, artist and narrative description of the artwork.

Display Period. This is a temporary display that will be on-loan from OZ Art LLC for one-year from the date of installation.

Funding. OZ Art is lending the artwork to the city at no charge. As the owner of the artwork, OZ Art is responsible for installing, insuring, maintaining and de-installing the artwork. There is no cost to the city.

Recommendation. This artwork was recommended unanimously by the Bentonville Public Library Advisory Board on Aug. 6, 2024, and unanimously by the PAAC on Aug. 13, 2024.

RESOLUTION NO. _____

A RESOLUTION TO INSTALL CLAIRE TABOURET'S ARTWORK, *TEGYU AND TERRIN (BLUE),* IN THE BENTONVILLE PUBLIC LIBRARY ON A ONE-YEAR LOAN FROM OZ ART, LLC AT NO COST TO THE CITY; AND FOR OTHER PURPOSES.

WHEREAS, the City Council of the City of Bentonville has established the importance of integrating public art into the daily lives of the citizens of Bentonville by adopting a Public Art Policy with Ordinance No. 2013 – 40 on May 14, 2013;

WHEREAS, OZ Art, LLC proposes to lend artwork to the City of Bentonville for display in the Bentonville Public Library for one year at no charge to the City; and

WHEREAS, the artwork was recommended unanimously by the Bentonville Public Library Advisory Board on Aug. 6, 2024, and unanimously by the PAAC on Aug. 13, 2024.

NOW, THEREFORE, BE IT RESOLVED BY THE CITY COUNCIL OF THE CITY OF BENTONVILLE, ARKANSAS:

Section 1: That the City Council of the City of Bentonville, Arkansas hereby agrees to install Claire Tabouret's artwork, *Tegyu and Terrin (blue),* in the Bentonville Public Library on a one-year loan from OZ Art, LLC;

Section 2: That OZ Art, LLC, owner of the artwork, will lend the artwork to the City of Bentonville for one-year at no cost to the City;

Section 3: That OZ Art, LLC, owner of the artwork, will be responsible for installing, insuring, maintaining, and deinstalling the artwork;

Section 4 - Severability Provision: If any part of this Resolution is held invalid, the remainder of this Resolution shall continue in effect as if such invalid portion never existed; and

Section 5 - Repeal of Conflicting Provisions: All Ordinances, Resolutions, or Orders of the City Council, or parts of the same, in conflict with this Resolution are repealed to the extent of such conflict.

PASSED and APPROVED this ___ day of _____, 2024.

APPROVED:

_____

Stephanie Orman, Mayor

ATTEST:

_____

Malorie Marrs, City Clerk

City of Bentonville, Arkansas Agenda Item Form

Item Details

Council Meeting Date:	8/27/2024	**Submitted By:**	Shelli Kerr
Phone:	479-271-6822	**For Department(s):**	Planning, Bentonville Public Library
Email:	skerr@bentonvillear.com		

Item Type (Check all that apply)

☐ **Informational** ☐ **Bid Award** ☐ **Enter into an Agreement** ☐ **Change Order**
☐ **Recognizing Funds** ☐ **Budget Adjustment** ☐ **Waiver of Bid** ☐ **Emergency Clause**
☐ **Ordinance** ☑ **Resolution** ☐ **Informational**

Title, Recommendation & Justification

Title:	Resolution for an OZ Art Loan to Bentonville Public Library - Walk Like an Egyptian
Action Recommendation & Justification:	A resolution to install Matt Kleberg's artwork, Walk Like an Egyptian (Head to Head), in the Bentonville Public Library (BPL) on a one-year loan from OZ Art, LLC. No budget adjustment is needed.
Additional Comments for Consideration (Optional):	OZ Art will be responsible for installing, insuring, maintaining and deinstalling the artwork. This artwork was recommended by the Bentonville Public Library Advisory Board on Aug. 6, 2024, and by the PAAC on Aug. 13, 2024. There is no cost to the city. Memo attached.
Amount for Approval:	$

Budget Impact

Is this Item Budgeted? ☐ **YES** ☐ **NO** ☑ **ITEM HAS NO COST** ☐ **OTHER:**_____

Budget Adjustment *(to be completed by Finance when applicable)*

Account Number (ORG-OBJECT)	Account Description	Expense	Revenue
		$	$
		$	$
		$	$
		$	$

Fund(s) Impacted (check all that apply) ☐ **General Fund** ☐ **Utility Fund** ☐ **Street Fund** ☐ **Other(s):**_____

Budget Impact Notes for Consideration (Optional):

MEMO

To: Mayor Stephanie Orman and Bentonville City Council

From: Shelli Kerr, AICP, Comprehensive Planning Manager

On behalf of: Bentonville Public Art Advisory Committee and Bentonville Public Library

CC date: August 27, 2024

RE: OZ Art Loan of Artwork to Bentonville Public Library – *Walk Like An Egyptian*

Request. Approval of a resolution to install Matt Kleberg's artwork, *Walk Like an Egyptian (Head to Head),* in the Bentonville Public Library (BPL) on a one-year loan from OZ Art, LLC.

Description. This work is a large diptych and while it reads super graphic in photos, the surfaces are quite textured and rough from multiple layers of paint, while also having precision in linework and delineation. They truly come alive in person. This was a commission made specifically for a storefront installation on Central St. (originally Brika but now Faherty) in the old bank in downtown. The arched canvases were made to mimic the historic architecture and arched vaulted ceilings in the bank.

The artist is inspired by architecture he sees in his neighborhood in Brooklyn and during his travels.

Selected for the Library because similarly, it will mirror some of the arched reading nooks in the library. The pieces are also made with oil stick that is drawn onto the surface, rather than painted, and could be a learning opportunity about different artistic mediums and inspire creativity.

Year: 2021. *Medium:* Oil stick on canvas. *Size:* 84 x 84 x 1" (each).

Display Site. The proposed display site is inside the Bentonville Public Library at a location to be mutually agreed upon between OZ Art and BPL which will be determined closer to date of install. OZ Art will provide signage with the title, artist and narrative description of the artwork.

Display Period. This is a temporary display that will be on-loan from OZ Art LLC for one-year from the date of installation.

Funding. OZ Art is lending the artwork to the city at no charge. As the owner of the artwork, OZ Art is responsible for installing, insuring, maintaining and de-installing the artwork. There is no cost to the city.

Recommendation. This artwork was recommended by the Bentonville Public Library Advisory Board on Aug. 6, 2024, and by the PAAC on Aug. 13, 2024.

RESOLUTION NO. _____

A RESOLUTION TO INSTALL MATT KLEBERG'S ARTWORK, *WALK LIKE AN EGYPTIAN (HEAD TO HEAD),* IN THE BENTONVILLE PUBLIC LIBRARY ON A ONE-YEAR LOAN FROM OZ ART, LLC AT NO COST TO THE CITY; AND FOR OTHER PURPOSES.

WHEREAS, the City Council of the City of Bentonville has established the importance of integrating public art into the daily lives of the citizens of Bentonville by adopting a Public Art Policy with Ordinance No. 2013 – 40 on May 14, 2013;

WHEREAS, OZ Art, LLC proposes to lend artwork to the City of Bentonville for display in the Bentonville Public Library for one year at no charge to the City; and

WHEREAS, the artwork was recommended by the Bentonville Public Library Advisory Board on Aug. 6, 2024, and by the PAAC on Aug. 13, 2024.

NOW, THEREFORE, BE IT RESOLVED BY THE CITY COUNCIL OF THE CITY OF BENTONVILLE, ARKANSAS:

Section 1: That the City Council of the City of Bentonville, Arkansas hereby agrees to install Matt Kleberg's artwork, *Walk Like an Egyptian (Head to Head),* in the Bentonville Public Library on a one-year loan from OZ Art, LLC.;

Section 2: That OZ Art, LLC, owner of the artwork, will lend the artwork to the City of Bentonville for one-year at no cost to the City;

Section 3: That OZ Art, LLC, owner of the artwork, will be responsible for installing, insuring, maintaining, and deinstalling the artwork;

Section 4 - Severability Provision: If any part of this Resolution is held invalid, the remainder of this Resolution shall continue in effect as if such invalid portion never existed; and

Section 5 - Repeal of Conflicting Provisions: All Ordinances, Resolutions, or Orders of the City Council, or parts of the same, in conflict with this Resolution are repealed to the extent of such conflict.

PASSED and APPROVED this ___ day of _____, 2024.

APPROVED:

_____

Stephanie Orman, Mayor

ATTEST:

_____

Malorie Marrs, City Clerk

City of Bentonville, Arkansas Agenda Item Form

Item Details

Council Meeting Date:	8/27/2024	**Submitted By:**	Shelli Kerr
Phone:	479-271-6822	**For Department(s):**	Planning, Bentonville Public Library
Email:	skerr@bentonvillear.com		

Item Type (Check all that apply)

☐ **Informational** ☐ **Bid Award** ☐ **Enter into an Agreement** ☐ **Change Order**
☐ **Recognizing Funds** ☐ **Budget Adjustment** ☐ **Waiver of Bid** ☐ **Emergency Clause**
☐ **Ordinance** ☑ **Resolution** ☐ **Informational**

Title, Recommendation & Justification

Title:	Resolution approving Installation of Art on Public Property - The Physics of Being
Action Recommendation & Justification:	A resolution to install Justin Tyler Tate's artwork, The Physics of Being, in Creekside Park. No budget adjustment is needed.
Additional Comments for Consideration (Optional):	Bentonville Advertising and Promotion Commission is paying for the artwork. This artwork was recommended by the Public Art Advisory Committee and the Parks and Recreation Advisory Board. Memo attached. There is no cost to the city.
Amount for Approval:	$

Budget Impact

Is this Item Budgeted? ☐ **YES** ☐ **NO** ☐ **ITEM HAS NO COST** ☑ **OTHER:** Funded by Bentonville A&P Com.

Budget Adjustment *(to be completed by Finance when applicable)*

		$	$
Account Number (ORG-OBJECT)	Account Description	Expense	Revenue
		$	$
Account Number (ORG-OBJECT)	Account Description	Expense	Revenue
		$	$
Account Number (ORG-OBJECT)	Account Description	Expense	Revenue
		$	$
Account Number (ORG-OBJECT)	Account Description	Expense	Revenue

Fund(s) Impacted (check all that apply) ☐ **General Fund** ☐ **Utility Fund** ☐ **Street Fund** ☐ **Other(s):**_____

Budget Impact Notes for Consideration (Optional):

MEMO

To: Mayor Stephanie Orman and Bentonville City Council

From: Shelli Kerr, AICP, Comprehensive Planning Manager

On behalf of: Bentonville Public Art Advisory Committee and Bentonville Parks and Recreation

CC date: August 27, 2024

RE: Artwork on Public Property – *The Physics of Being*

Request. Approval of a resolution to install Justin Tyler Tate's artwork, *The Physics of Being,* on public property in Creekside Park at no cost to the city.

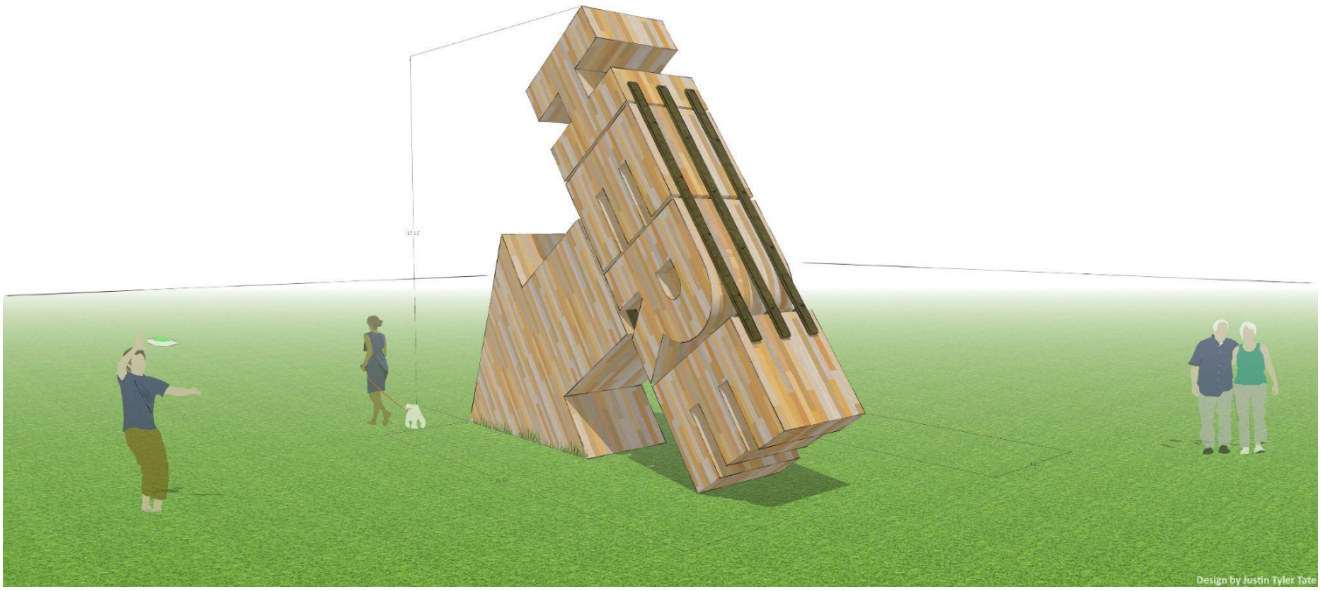

Description. The installation presents a monumental arrow with the text "HERE" resting on the grass. The work is to be constructed on-site, over a period of approximately 25 days, out of new and repurposed wood. Though the work is simple in its design, it allows for viewers to contemplate their own existence in relation to space and time. For example, when people are taking and posting photographs of themselves, their friends and family with the installation, they're announcing to the world that they are "here", and those viewing the photographs are not. The work is made to be semi-permanent, with a minimum lifespan of three years which can be elongated by adding annual coats of wood sealant. The installation is made to last while using materials that are sustainable as well as aesthetically appropriate for use in a semi-natural setting.

Year: 2024-2025. *Medium:* Wood, screws, wood sealant. *Size:* Height: 17.11', Width and Depth: 4' x 19'.

Display Site. Creekside Park.

Display Period. Permanent installation.

Funding. The artwork is estimated to cost $21,849.61, which will be paid for by the Bentonville Advertising and Promotion Commission. There is no cost to the city.

Recommendation. This artwork was recommended by the Parks and Recreation Advisory Board and the Public Art Advisory Committee.

RESOLUTION NO. _____

A RESOLUTION TO INSTALL JUSTIN TYLER TATE'S ARTWORK, *THE PHYSICS OF BEING,* ON PUBLIC PROPERTY IN CREEKSIDE PARK AT NO COST TO THE CITY; AND FOR OTHER PURPOSES.

WHEREAS, the City Council of the City of Bentonville has established the importance of integrating public art into the daily lives of the citizens of Bentonville by adopting a Public Art Policy with Ordinance No. 2013 – 40 on May 14, 2013; and

WHEREAS, the artwork was recommended by the Public Art Advisory Committee and the Parks and Recreation Advisory Board.

NOW, THEREFORE, BE IT RESOLVED BY THE CITY COUNCIL OF THE CITY OF BENTONVILLE, ARKANSAS:

Section 1: That the City Council of the City of Bentonville, Arkansas hereby agrees to install Justin Tyler Tate's artwork, *The Physics of Being,* on public property in Creekside Park;

Section 2: That the Bentonville Advertising and Promotion Commission is paying for the artwork and there is no cost to the city;

Section 3 - Severability Provision: If any part of this Resolution is held invalid, the remainder of this Resolution shall continue in effect as if such invalid portion never existed; and

Section 4 - Repeal of Conflicting Provisions: All Ordinances, Resolutions, or Orders of the City Council, or parts of the same, in conflict with this Resolution are repealed to the extent of such conflict.

PASSED and APPROVED this ____ day of _____, 2024.

APPROVED:

_____
Stephanie Orman, Mayor

ATTEST:

_____
Malorie Marrs, City Clerk

City of Bentonville, Arkansas Agenda Item Form

Item Details

Council Meeting Date:	8/27/2024	**Submitted By:**	Tracy Billings
Phone:	479-696-0229	**For Department(s):**	Transportation
Email:	tbillings@bentonvillear.com		

Item Type (Check all that apply)

☐ **Informational** ☐ **Bid Award** ☐ **Enter into an Agreement** ☐ **Change Order**
☐ **Recognizing Funds** ☐ **Budget Adjustment** ☐ **Waiver of Bid** ☐ **Emergency Clause**

☐ **Ordinance** ☑ **Resolution** ☐ **Informational**

Title, Recommendation & Justification

Title:	Resolution Setting Public Hearing for Utility/Drainage Easement Vacation (VAC24-0007)
Action Recommendation & Justification:	Approve Resolution to set Public Hearing for Sept 10, 2024 for a Utility/Drainage Easement Vacation located at Lot 4, Block 3 of Edgar Estates Subdivision (VAC24-0007). No budget adjustment is needed.
Additional Comments for Consideration (Optional):	Resolution and GIS Vicinity Map attached.
Amount for Approval:	$ 0

Budget Impact

Is this Item Budgeted? ☐ **YES** ☐ **NO** ☐ **ITEM HAS NO COST** ☐ **OTHER:**_____

Budget Adjustment *(to be completed by Finance when applicable)*

		$	$
Account Number (ORG-OBJECT)	Account Description	Expense	Revenue
		$	$
Account Number (ORG-OBJECT)	Account Description	Expense	Revenue
		$	$
Account Number (ORG-OBJECT)	Account Description	Expense	Revenue
		$	$
Account Number (ORG-OBJECT)	Account Description	Expense	Revenue

Fund(s) Impacted (check all that apply) ☐ **General Fund** ☐ **Utility Fund** ☐ **Street Fund** ☐ **Other(s):**_____

Budget Impact Notes for Consideration (Optional):

VAC24-0007
Proposed South 6' of 20' Drainage and Utility Easement Vacation
1806 SW Nottingham Ave

RESOLUTION NO._____

IN THE CITY COUNCIL FOR THE CITY OF BENTONVILLE, ARKANSAS:

WHEREAS, a petition was duly filed with the City Council of Bentonville, Arkansas by Brandon Luckenbaugh requesting a utility/drainage easement vacation (VAC24-0007) within the City of Bentonville, Arkansas be vacated, which said utility easements is described as follows:

A vacation of the south 6' of the 20' Utility and Drainage Easement on the North side of Lot 4 Block 3 of Edgar Estates Subdivision as shown on Plat Record Book 2016 Page 203 and filed for record at the Benton County Clerk's Office, Benton County, Arkansas

WHEREAS Ark. Code Ann. Section 14-301-302(c) provides that the City Council shall by resolution fix a day for the hearing of the petition and shall direct the City Clerk and Recorder to give notice of the meeting, by publication, once per week for two (2) consecutive weeks in some newspaper published in and having general circulation in Bentonville, Benton County, Arkansas.

NOW, THEREFORE, BE IT RESOLVED, by the City of Bentonville, Arkansas, that the petition to close the above described utility/drainage easement is set for a hearing September 10, 2024 at 6:00 p.m. in the City Council Room of the City of Bentonville, Arkansas, and the Bentonville City Clerk and Recorder is directed to give notice of this meeting by publication as set forth by Ark. Code Ann. Section 14-301-302(c).

The above and foregoing resolution was passed, approved, and adopted the _____ day of _____ 2024 at a regular meeting of the City Council of the City of Bentonville, Arkansas.

_____	_____
Malorie Marrs, City Clerk	**Stephanie Orman, Mayor**
Bentonville, Arkansas	**City of Bentonville, Arkansas**

City of Bentonville, Arkansas Agenda Item Form

Item Details

Council Meeting Date:	8/27/2024	**Submitted By:**	Machele Bowen
Phone:	479-271-3117	**For Department(s):**	Administration and Transportation
Email:	mbowen@bentonvillear.com		

Item Type (Check all that apply)

☐ **Informational** ☐ **Bid Award** ☐ **Enter into an Agreement** ☐ **Change Order**
☐ **Recognizing Funds** ☑ **Budget Adjustment** ☐ **Waiver of Bid** ☑ **Emergency Clause**
☑ **Ordinance** ☐ **Resolution** ☐ **Informational**

Title, Recommendation & Justification

Title:	Ordinance amending City Pay Plan Creating Communications Manager & Airport Manager Positions
Action Recommendation & Justification:	Ordinance amending the City Pay Plan to eliminate the Director of Administration position, creating positions of Communications Manager (grade 33) and Airport Manager (grade 33). A budget adjustment is needed and follows on the next page.
Additional Comments for Consideration (Optional):	Please see attached memo.
Amount for Approval:	$ 29,875.00

Budget Impact

Is this Item Budgeted? ☐ **YES** ☑ **NO** ☐ **ITEM HAS NO COST** ☐ **OTHER:**_____

Budget Adjustment *(to be completed by Finance when applicable)*

Account Number (ORG-OBJECT)	Account Description	Expense	Revenue
		$	$
		$	$
		$	$
		$	$

Fund(s) Impacted (check all that apply) ☑ **General Fund** ☐ **Utility Fund** ☐ **Street Fund** ☐ **Other(s):**_____

Budget Impact Notes for Consideration (Optional):

Funded by General Fund reserves.

Budget Adjustment - Pay Plan Amendment (Communication Manager & Airport Manager)

Account Number (ORG-OBJECT)	Account Description	Expense	Revenue
101010-41010	Full Time Salaries/Wages	4,500.00	
101650-41010	Full Time Salaries/Wages	16,650.00	
101650-41420	Misc Add Pay	700.00	
101650-41910	Cell Phone Allowance	202.00	
101650-41940	Vehicle Allowance	1,212.00	
101650-41510	FICA and Medicare Expense	1,418.00	
101650-41810	Retirement - APERS	2,655.00	
101650-41710	Health Insurance	2,055.00	
101650-41740	Dental Insurance	154.00	
101650-41750	Vision Insurance	9.00	
101650-41712	HSA Contribution	300.00	
101650-41720	Long Term Disability	20.00	
	Total	**29,875.00**	**-**

MEMO

To: City Council Members and City Clerk
From: Stephanie Orman, Mayor
CC date: August 27, 2024
RE: Creation of Communications Manager & Airport Manager Positions

As Bentonville continues to grow rapidly, the demands on our city administration have increased. The current role of the Director of Administration, which covers both communications and airport management, has become challenging due to the distinct nature of these responsibilities. To better serve our community, I propose splitting this role into two positions: Communications Manager and Airport Manager.

A Communications Manager would handle public relations, media outreach, community engagement, and internal communications, which are vital for shaping the city's image and ensuring effective communication with residents.

An Airport Manager would oversee the airport's operations, including hanger leases, grant management, project oversight, regulatory compliance, and coordination with aviation authorities, requiring specialized aviation knowledge.

To minimize the budget impact, these two new positions would be created at lower pay grades than the current Director of Administration role. This approach ensures that we can gain the necessary expertise in both areas without significantly increasing overall personnel costs.

By separating these roles, we can ensure each is led by a professional with the right expertise, leading to more effective management, improved efficiency, and enhanced focus on strategic priorities. This change is essential for supporting Bentonville's continued growth and development.

I recommend that the City Council approve the creation of these two positions to better serve our community and position Bentonville for future success.

Thank You-

[redacted]

Stephanie Orman
Mayor of Bentonville

ORDINANCE NO. _____

AN ORDINANCE AMENDING THE 2024 PAY PLAN FOR THE CITY OF BENTONVILLE; ELIMINATING THE DIRECTOR OF ADMINISTRATION POSITION; ADDING THE POSITIONS OF COMMUNICATIONS MANAGER AND AIRPORT MANAGER; AMENDING THE 2024 BUDGET TO APPROPRIATE TWENTY-NINE THOUSAND EIGHT HUNDRED SEVENTY-FIVE DOLLARS ($29,875.00) TO VARIOUS PAYROLL ACCOUNTS; PROVIDING FOR THE EMERGENCY CLAUSE; AND FOR OTHER PURPOSES.

WHEREAS, as job responsibilities have shifted, the Mayor has worked with the Human Resources, Finance, and Transportation Departments to create positions that best serve the citizens of Bentonville; and

WHEREAS, a budget adjustment is required to properly appropriate the funds.

NOW, THEREFORE, BE IT ORDAINED BY THE CITY COUNCIL OF THE CITY OF BENTONVILLE, ARKANSAS THAT:

Section 1: The Pay Plan for the City of Bentonville should be and is hereby amended to include the following:

Position Replacement:

Remove:	Director of Administration	Grade 38
Add:	Communications Manager	Grade 33
	Airport Manager	Grade 33

Section 2 - Emergency Clause: The need to make this change is immediate, so as to fill these positions and not delay implementation, an emergency is hereby declared to exist, and this Ordinance shall be in full force and effect from the date of its passage and approval;

Section 3: The 2024 Budget is adjusted to appropriate monies, in the total amount of twenty-nine thousand eight hundred seventy-five dollars ($29,875.00) from General Fund Reserves to various accounts as shown below:

Account Number (ORG-OBJECT)	Account Description	Expense
101010-41010	Full Time Salaries/Wages	4,500.00
101650-41010	Full Time Salaries/Wages	16,650.00
101650-41420	Misc Add Pay	700.00
101650-41910	Cell Phone Allowance	202.00
101650-41940	Vehicle Allowance	1,212.00
101650-41510	FICA and Medicare Expense	1,418.00
101650-41810	Retirement - APERS	2,655.00
101650-41710	Health Insurance	2,055.00
101650-41740	Dental Insurance	154.00
101650-41750	Vision Insurance	9.00
101650-41712	HSA Contribution	300.00
101650-41720	Long Term Disability	20.00

Section 4 - Severability Provision: If any part of this Ordinance is held invalid, the remainder of this Ordinance shall continue in effect as if such invalid portion never existed; and

Section 5 - Repeal of Conflicting Provisions: All Ordinances, Resolutions, or Orders of the City Council, or parts of the same, in conflict with this Ordinance are repealed to the extent of such conflict.

PASSED this _____ day of _____, 2024.

APPROVED:

_____
STEPHANIE ORMAN, Mayor

Attest:

_____
MALORIE MARRS, City Clerk

City of Bentonville, Arkansas Agenda Item Form

Item Details

Council Meeting Date:	8/27/2024	**Submitted By:**	Mike Bender
Phone:	479-271-3140	**For Department(s):**	Water Utilities
Email:	mbender@bentonvillear.com		

Item Type (Check all that apply)

☐ Informational ☑ Bid Award ☐ Enter into an Agreement ☐ Change Order
☐ Recognizing Funds ☑ Budget Adjustment ☐ Waiver of Bid ☐ Emergency Clause
☐ Ordinance ☑ Resolution ☐ Informational

Title, Recommendation & Justification

Title:	Resolution to Award Bid IFB-24-63 Emergency Waterway Debris Removal & Disaster Recovery
Action Recommendation & Justification:	Resolution to award bid IFB-24-63 Emergency Waterway Debris Removal and Disaster Recovery Services to Horner Services, LLC per the unit prices attached, in an amount not to exceed $905,008.00. A budget adjustment is needed.
Additional Comments for Consideration (Optional):	Horner Services, LLC is the low, responsive bidder. This contract covers waterway debris removal from damage left by the May 26, 2024, tornado and severe storm event on a per unit price, not to exceed the total bid amount. Debris removal will be managed by the City's grant management consultant, Thompson Consulting, Inc., per the contract approved at the June 3, 2024, City Council meeting.
Amount for Approval:	$ 905,008.00

Budget Impact

Is this Item Budgeted? ☐ YES ☑ NO ☐ ITEM HAS NO COST ☐ OTHER:_____

Budget Adjustment *(to be completed by Finance when applicable)*

Account Number (ORG-OBJECT)	Account Description	Expense	Revenue
101010-43710	Contracts	$ 905,008.00	$
		$	$
		$	$

Fund(s) Impacted (check all that apply) ☑ General Fund ☐ Utility Fund ☐ Street Fund ☐ Other(s):_____

Budget Impact Notes for Consideration (Optional):

BID TABULATION

IFB-24-63 Emergency Waterway Debris Removal and Disaster Recovery Services

City of Bentonville, Arkansas

Bids Received Tuesday, August 13, 2024 at 1:00 PM

IFB-24-63 Emergency Waterway Debris Removal and Disaster Recovery Services					Looks Great Services of MS, Inc.		Horner Services, LLC		TFR Enterprises, Inc.	
Item No.	Description	Additional Item Description	Unit	Quantity	Unit Price	Extended Price	Unit Price	Extended Price	Unit Price	Extended Price
1	Debris Removal from Waterways and Hauling to Debris Management Sites (DMS)		CY	25,000	$ 42.00	$ 1,050,000.00	$ 8.95	$ 223,750.00		
2	Debris Removal from Waterways and Hauling to Final Disposal Sites Approved by the City. Tipping fees shall be a pass through cost to the City.		CY	25,000	$ 67.00	$ 1,675,000.00	$ 17.35	$ 433,750.00	During bid evaluation, Purchasing discovered that TFR Enterprises, Inc. did not use the amended bid packet that was included in Addendum 1. Failure to submit a bid using the amended bid packet has resulted in the rejection of TFR Enterprises, Inc. Bid Submission.	
3	DMS Management, Operations, and Reduction of Waterways Debris By Grinding, Includes preparation, operation, remediation, and management of disaster related debris delivered to the DMS by the Contractor or City.		CY	25,000	$ 6.00	$ 150,000.00	$ 5.90	$ 147,500.00		
4	Haul Out Reduced Waterways Debris to a Final Disposal Site(s) Approved by the City. Tipping fees shall be a pass through cost to the City.	0 - 30 Miles	CY	25,000	$ 8.00	$ 200,000.00	$ 4.00	$ 100,000.00		
4A	Haul Out Reduced Waterways Debris to a Final Disposal Site(s) Approved by the City. Tipping fees shall be a pass through cost to the City.	30 - 60 Miles	CY	1	$ 12.00	$ 12.00	$ 4.00	$ 4.00		
4B	Haul Out Reduced Waterways Debris to a Final Disposal Site(s) Approved by the City. Tipping fees shall be a pass through cost to the City.	Greater than 60 Miles	CY	1	$ 18.00	$ 18.00	$ 4.00	$ 4.00		
TOTAL BID PRICE					$	3,075,030.00	$	905,008.00		
							**Line 4 (0-30 Miles) Extended Price and Total Bid Price corrected during bid evaluation.*			

purchasing@bentonvillear.com - (479) 271-3115

RESOLUTION NO. _____

A RESOLUTION AWARDING BID IFB-24-63 TO HORNER SERVICES, LLC., FOR EMERGENCY WATERWAY DEBRIS REMOVAL AND DISASTER RECOVERY, ON A PER UNIT PRICE, IN AN AMOUNT NOT TO EXCEED NINE HUNDRED FIVE THOUSAND EIGHT DOLLARS ($905,008.00); ADJUSTING THE 2024 BUDGET; AND FOR OTHER PURPOSES.

WHEREAS, Horner Services, LLC. was the lowest responsive bidder for bid IFB-24-63;

WHEREAS, this contract covers waterway debris removal from damage left by the May 26, 2024, tornado and severe storm event; and

WHEREAS, this will be paid utilizing monies from the General Fund Reserves.

NOW, THEREFORE, BE IT RESOLVED BY THE CITY COUNCIL OF THE CITY OF BENTONVILLE, ARKANSAS THAT:

Section 1: The Mayor and City Clerk are authorized to enter into a contract with Horner Services, LLC. to provide waterway debris removal and disaster recovery, on a per unit price, in an amount not to exceed nine hundred five thousand eight dollars ($905,008.00);

Section 2: The 2024 Budget is hereby adjusted to appropriate nine hundred five thousand eight dollars ($905,008.00) from General Fund into Account #101010-43710 – Contracts;

Section 3 - Severability Provision: If any part of this Resolution is held invalid, the remainder of this Resolution shall continue in effect as if such invalid portion never existed; and

Section 4 - Repeal of Conflicting Provisions: All Ordinances, Resolutions, or Orders of the City Council, or parts of the same, in conflict with this Resolution are repealed to the extent of such conflict.

PASSED and APPROVED this _____ day of _____, 2024.

APPROVED:

_____
STEPHANIE ORMAN, Mayor

ATTEST:

_____
MALORIE MARRS, City Clerk

City of Bentonville, Arkansas Agenda Item Form

Item Details

Council Meeting Date:	8/27/2024	**Submitted By:**	Travis Matlock
Phone:	479-271-5941	**For Department(s):**	Electric
Email:	tmatlock@bentonvillear.com		

Item Type (Check all that apply)

☐ Informational ☐ Bid Award ☑ Enter into an Agreement ☐ Change Order
☐ Recognizing Funds ☐ Budget Adjustment ☐ Waiver of Bid ☐ Emergency Clause

☐ Ordinance ☑ Resolution ☐ Informational

Title, Recommendation & Justification

Title:	Resolution to enter a Master Service Agreement with PSE to Assist BEUD with Future Technology
Action Recommendation & Justification:	The Master Service Agreement with PSE will allow BEUD to begin implementation of new technology to build on top of the recently installed AMI system. PSE will assist with RFQs/RFPs to select and oversee BEUD's future tech purchases. This firm was selected following the City's Purchasing Policy for professional services. Approved by Utility Board 5-0. No budget adjustment is needed.
Additional Comments for Consideration (Optional):	Each Work Order will be reviewed and signed by the Mayor. If over the $35,000 threshold, will be presented to the Utility Board and City Council.
Amount for Approval:	$

Budget Impact

Is this Item Budgeted? ☑ YES ☐ NO ☐ ITEM HAS NO COST ☐ OTHER:_____

Budget Adjustment *(to be completed by Finance when applicable)*

		$	$
Account Number (ORG-OBJECT)	Account Description	Expense	Revenue
		$	$
Account Number (ORG-OBJECT)	Account Description	Expense	Revenue
		$	$
Account Number (ORG-OBJECT)	Account Description	Expense	Revenue
		$	$
Account Number (ORG-OBJECT)	Account Description	Expense	Revenue

Fund(s) Impacted (check all that apply) ☐ General Fund ☐ Utility Fund ☐ Street Fund ☐ Other(s):_____

Budget Impact Notes for Consideration (Optional):

PROFESSIONAL SERVICES AGREEMENT

PROJECT NAME: Technology Assistance

THIS AGREEMENT ("AGREEMENT") is made in Benton County, Arkansas, by and between the City of Bentonville, Arkansas, hereinafter referred to as "CITY", and Power System Engineering, Inc. hereinafter referred to as "PROFESSIONAL CONSULTANT" (collectively, the "PARTIES").

The PARTIES have caused this AGREEMENT to be effective this 9th day of August, 2024 ("EFFECTIVE DATE").

RECITALS:

A. WHEREAS, the CITY has a need for technology assistance; and

B. WHEREAS, The CITY has selected the PROFESSIONAL CONSULTANT and negotiated this AGREEMENT using the procedures as set forth in Ark. Code Ann. § 19-11-801 et. seq.; and

C. WHEREAS, the CITY wishes to contract for Professional Services; and

D. WHEREAS, The PROFESSIONAL CONSULTANT has the skill, experience, ability, background, certifications and knowledge to provide these services; and

E. WHEREAS, The PROFESSIONAL CONSULTANT wishes to perform such professional services under this AGREEMENT with the CITY.

NOW, THEREFORE, in consideration of the terms in this AGREEMENT, the CITY and PROFESSIONAL CONSULTANT agree to the following:

ARTICLE I - PROJECT DESCRIPTION

The PROJECT shall be as described in APPENDIX A, "Proposed Scope of Work" attached hereto and incorporated herein by reference.

ARTICLE II - SCOPE OF SERVICE

Upon issuance of a written Notice to Proceed by the CITY, PROFESSIONAL CONSULTANT agrees to provide the CITY the necessary professional services related to the PROJECT, as set forth in APPENDIX A, "Proposed Scope of Work" attached hereto and incorporated herein by reference.

ARTICLE III - STANDARD OF CARE

PROFESSIONAL CONSULTANT shall at all times material hereto adhere to the generally accepted standard of care typically exhibited by similarly situated professionals performing similar scope(s) of service on projects of like size, scope, nature, cost, schedule, and complexity, at the same time and in the same general regional locale ("Standard of Care").

ARTICLE IV - ADDITIONAL SERVICES

A. Any service outside of the work described herein or included by reference hereto must be pre-approved by the CITY and executed as an AMENDMENT to this AGREEMENT by the Parties prior to any such work being completed; any such AMENDMENT shall be in accordance with the CITY's purchasing laws and guidelines and may require approval from the Bentonville City Council.

B. PROFESSIONAL CONSULTANT shall make no claims for additional services or changes in the services until an AMENDMENT has been fully executed by the Parties.

ARTICLE V - SCHEDULE OF FEES, SERVICES AND PAYMENT

A. The term of this AGREEMENT shall commence on the EFFECTIVE DATE and shall proceed in accordance with APPENDIX A, "Proposed Scope of Work", attached hereto and incorporated herein by reference.

B. The cost of this AGREEMENT shall be in accordance with APPENDIX A.

C. The cost of this AGREEMENT shall not exceed the price determined by project in accordance with attached rate sheet without approval by the Bentonville Utility Board and Bentonville City Council.

D. CITY agrees to pay PROFESSIONAL CONSULTANT for all services authorized by inclusion in this AGREEMENT which have been properly performed by PROFESSIONAL CONSULTANT in accordance with this AGREEMENT.

E. All fees paid to PROFESSIONAL CONSULTANT shall be based on invoices submitted by PROFESSIONAL CONSULTANT for work performed under this AGREEMENT, less any previous payments. PROFESSIONAL CONSULTANT shall submit invoices for services related to this AGREEMENT on a monthly basis.

F. CITY reserves the right to delay, without penalty, any partial payment when, in the opinion of the CITY, PROFESSIONAL CONSULTANT has not made satisfactory progress on the Project based on the SCOPE. If CITY objects to any portion of an invoice, the CITY shall notify PROFESSIONAL CONSULTANT and shall pay all other portions of the invoice which are not in dispute. In the event of dispute, CITY and PROFESSIONAL CONSULTANT shall immediately make every effort to settle the disputed portion of the invoice.

G. In the event that the CITY becomes credibly informed that any representations of PROFESSIONAL CONSULTANT provided in its invoicing are wholly or partially inaccurate, CITY may withhold payment of sums then, or in the future, otherwise due to PROFESSIONAL CONSULTANT until the inaccuracy and the cause thereof is corrected to the CITY's reasonable satisfaction.

H. If the CITY fails to make any payment, not in dispute, due to PROFESSIONAL CONSULTANT within thirty (30) days after receipt of an invoice, then the amount due to the PROFESSIONAL CONSULTANT will increase at the lesser of one percent (1 %) per month or the maximum amount allowed by law after the 30th day. In addition, PROFESSIONAL CONSULTANT may, after giving seven (7) days' written notice to CITY, suspend its services and any deliverables until PROFESSIONAL CONSULTANT has been paid in full for all amounts outstanding more than thirty (30) days.

ARTICLE VI - INSURANCE

A. PROFESSIONAL CONSULTANT shall during the term hereof maintain in full force and effect the following insurance:

1. A comprehensive general liability policy of insurance for bodily injury, death and property damage insuring against all claims, demands or actions relating to the PROFESSIONAL CONSULTANT's performance of services pursuant to this AGREEMENT with a combined single limit of not less than $1,000,000.00 per occurrence and $2,000,000 in the aggregate for injury to persons (including death), and for property damage;

2. A policy of automobile liability insurance covering any vehicles owned and/or operated by PROFESSIONAL CONSULTANT, its officers, agents, and employees, and used in the performance of this AGREEMENT with policy limits of not less than $1,000,000.00 combined single limit and aggregate for bodily injury and property damage;

3. Statutory Worker's Compensation Insurance at the statutory limits and Employers Liability covering all of PROFESSIONAL CONSULTANT's employees involved in the provision of services under this AGREEMENT with policy limit of not less than $1,000,000.00; and

4. Professional Liability/Errors and Omissions coverage covering negligent acts, errors and omissions in the performance of professional services with policy limit of not less than $1,000,000.00.

B. All insurance and certificate(s) of insurance shall contain the following provisions:

1. Include CITY as additional insured as to all applicable coverage with the exception of Workers Compensation Insurance and Professional Liability/Errors and Omissions coverage; and

2. provide for at least thirty (30) days prior written notice to CITY for cancellation or non-renewal of the insurance;

3. provide for a waiver of subrogation against CITY for injuries, including death, property damage, or any other loss to the extent the same is covered by the proceeds of insurance, except for Professional Liability/Errors and Omissions coverage.

C. PROFESSIONAL CONSULTANT shall provide 30 day written notice to CITY of any material change of or to the insurance required herein.

D. All insurance companies providing the required insurance shall be authorized to transact business in Arkansas and rated at least "A" by AM Best or other equivalent rating service. A certificate of insurance evidencing the required insurance and all endorsements required by this Agreement shall be submitted prior to commencement of services.

E. In the event that additional or greater insurance requirements are warranted, these requirements shall be included as an Appendix, which will be attached hereto and incorporated by reference.

ARTICLE VII - RIGHT OF ACCESS

A. CITY will obtain and/or furnish right-of-access for PROFESSIONAL CONSULTANT to perform any required studies, surveys, tests or other necessary investigations in relation to the PROJECT.

B. PROFESSIONAL CONSULTANT will take reasonable precautions to minimize damage to the personal or real property in the performance of such surveys, tests, studies and investigations.

C. CITY recognizes that PROFESSIONAL CONSULTANT's operations and use of equipment may unavoidably alter existing conditions or affect the environment at the PROJECT site. The cost of repairing such damage shall be the responsibility of PROFESSIONAL CONSULTANT, at no additional cost to the CITY. In the event that PROFESSIONAL CONSULTANT fails to correct such damages, CITY is entitled to utilize CITY forces or other labor to repair the damage; any costs incurred by CITY for such work shall be deducted from the monies due to PROFESSIONAL CONSULTANT.

ARTICLE VIII - RECORDS AND RETENTION

A. All surveys, studies, proposals, applications, drawings, plans, specifications and other documents, including those in electronic form, prepared by PROFESSIONAL CONSULTANT and its PROFESSIONAL CONSULTANTs, subcontractors, agents, representatives, and/or employees in connection with this AGREEMENT ("PROJECT DOCUMENTS") are intended for the use and benefit of CITY. PROFESSIONAL CONSULTANT and its PROFESSIONAL CONSULTANTs, subcontractors, agents, representatives, and/or employees shall be deemed the authors of their respective part of the PROJECT DOCUMENTS. Notwithstanding anything to the contrary, CITY shall own, have, and retain all rights, title and interest in and to all PROJECT DOCUMENTS, whether in draft form or final form, which are produced at CITY's request or otherwise produced from PROFESSIONAL CONSULTANT's performance of the work described herein for CITY. The CITY's ownership of PROJECT DOCUMENTS shall not apply to PROFESSIONAL CONSULTANT's proprietary standard details that were developed by the PROFESSIONAL CONSULTANT prior to the commencement of this PROJECT.

B. CITY shall have full authority to reuse, reproduce, publish, disclose and distribute PROJECT DOCUMENTS, as needed, according to Arkansas State Law.

C. PROFESSIONAL CONSULTANT shall, upon completion of the services and full payment for the PROFESSIONAL CONSULTANT'S services by the CITY, or earlier termination and appropriate compensation as provided by this AGREEMENT, provide the CITY with all PROJECT DOCUMENTS prepared by PROFESSIONAL CONSULTANT pursuant to this AGREEMENT in formats requested by the CITY.

D. All instruments of service (including plans, specifications, drawings, reports, designs, computations, computer programs, estimates, surveys, other data or work items, etc.) prepared under this AGREEMENT shall be submitted for approval to the CITY. All instruments of service shall be professionally sealed in accordance to applicable laws or at CITY's request.

E. Acceptance and approval of the PROJECT DOCUMENTS by the CITY shall not constitute nor be deemed a release of the responsibility and liability of PROFESSIONAL CONSULTANT, its employees, associates, agents and PROFESSIONAL CONSULTANT's for the accuracy or competency of their designs, working drawings and specifications, or other documents and work; nor shall such approval be deemed to be an

assumption of such responsibility by the CITY for any defect in the designs, working drawings and specifications, or other documents prepared by PROFESSIONAL CONSULTANT, its employees, contractor, agents and PROFESSIONAL CONSULTANT's.

F. PROFESSIONAL CONSULTANT will retain the PROJECT DOCUMENTS for a period of three years following project completion. During this three year period, any requests for document recovery and reproduction will be assessed a fee in accordance with PROFESSIONAL CONSULTANT's FEES.

ARTICLE IX - SAFETY

A. CITY agrees to inform PROFESSIONAL CONSULTANT of any applicable site safety procedures and regulations known to CITY as well as any special safety concerns or dangerous conditions at the site of which the CITY is aware, which PROFESSIONAL CONSULTANT shall communicate to its employees. PROFESSIONAL CONSULTANT and its employees shall adhere to such procedures and regulations once notice has been given by the CITY.

B. Unless specifically provided in the SCOPE, PROFESSIONAL CONSULTANT shall not have any responsibility for overall job safety at the site. If in the PROFESSIONAL CONSULTANT's opinion, its field personnel are unable to access required locations or perform required services in conformance with applicable safety standards, PROFESSIONAL CONSULTANT may immediately suspend performance until such safety standards can be attained.

C. PROFESSIONAL CONSULTANT agrees to indemnify and hold harmless the CITY for any safety conditions that may arise out of PROFESSIONAL CONSULTANT's performance of this AGREEMENT.

ARTICLE X - TERMINATION

A. CITY may suspend or terminate this AGREEMENT for cause or without cause at any time by giving written notice to PROFESSIONAL CONSULTANT. In the event suspension or termination is without cause, payment to PROFESSIONAL CONSULTANT, in accordance with the terms of this AGREEEMENT, will be made on the basis of services reasonably determined by the CITY to be satisfactorily performed to the date of suspension or termination. Such payment will be due upon delivery of all instruments of service to CITY.

B. Should the CITY require a modification of this AGREEMENT with the PROFESSIONAL CONSULTANT, and in the event the CITY and PROFESSIONAL CONSULTANT fail to agree upon a modification to this AGREEMENT, the CITY shall have the option of terminating this AGREEMENT and the PROFESSIONAL CONSULTANT's services hereunder at no additional cost other than the payment to PROFESSIONAL CONSULTANT, in accordance with the terms of this AGREEMENT, for the services reasonably determined by the CITY to be properly performed by PROFESSIONAL CONSULTANT prior to such termination date.

C. If, for whatever reason adequate funding is not made available by CITY to support or justify continuation of the level of services to be provided by PROFESSIONAL CONSULTANT under this AGREEMENT, CITY may terminate or reduce the amount of services to be provided by PROFESSIONAL CONSULTANT under this AGREEMENT. In such event, CITY will notify PROFESSIONAL CONSULTANT in writing at least thirty (30) days in advance of such termination or reduction of services for lack of funds.

D. In no event shall the CITY pay to PROFESSIONAL CONSULTANT fees for termination outside of payment for services reasonably determined by the City to be properly performed prior to termination.

ARTICLE XI - INDEMNIFICATION

A. For purposes of this AGREEMENT, PROFESSIONAL CONSULTANT agrees to indemnify, hold harmless the CITY, its officers and employees from any loss, damage, liability or expense, of any nature whatsoever to the extent caused by the negligence, willful misconduct, or other actionable fault of PROFESSIONAL CONSULTANT, its affiliates, subsidiaries, employees, agents, assignees, and subcontractors and their respective employees and agents. PROFESSIONAL CONSULTANT is not required hereunder to defend the CITY, its officers, appointees, employees, or agents from assertions that they were negligent, nor to indemnify and hold them harmless from liability based on the CITY's negligence

B. Nothing contained herein shall waive any governmental immunity CITY may be entitled to by law.

C. This provision shall survive the termination of this AGREEMENT.

ARTICLE XII - CONTINGENCY CLAUSE

A. NOT USED

ARTICLE XIII - RELATIONSHIP OF THE PARTIES

It is understood and agreed by and between the parties that the PROFESSIONAL CONSULTANT, in satisfying the conditions of this AGREEMENT, is acting independently, and that the CITY assumes no responsibility or liabilities to any third party in connection with PROFESSIONAL CONSULTANT's actions. All services to be performed by the PROFESSIONAL CONSULTANT pursuant to this AGREEMENT shall be in the capacity of an Independent Contractor, and not as an agent or employee of CITY. The PROFESSIONAL CONSULTANT shall supervise the performance of its services and shall be entitled to control the manner and means by which its services are to be performed, subject to the terms of this AGREEMENT. There is no intended third party beneficiary to the AGREEMENT and nothing contained herein shall create a contractual relationship with, or any rights in favor of, any third party.

ARTICLE XIV - DISPUTE RESOLUTION

A. CITY and PROFESSIONAL CONSULTANT agree that disputes relative to the services will first be addressed by negotiations between the Parties. If direct negotiations fail to resolve the dispute, the Party initiating the claim that is the basis for dispute may take such steps as it deems necessary to protect its interests; provided, however, that notwithstanding any such dispute, PROFESSIONAL CONSULTANT will proceed with the services as per this AGREEMENT as if no dispute existed, and CITY will continue to make payment for PROFESSIONAL CONSULTANT's completed services; and provided further that no dispute will be submitted to arbitration without both Parties' express written consent.

ARTICLE XV - OPINIONS OF PROBABLE COST

A. Since the PROFESSIONAL CONSULTANT has no control over the cost of labor, materials, equipment or services furnished by others, or over methods of determining prices, or over competitive bidding or market conditions, the PROFESSIONAL CONSULTANT's estimates of PROJECT costs and construction costs provided for herein are to be made on the basis of the PROFESSIONAL CONSULTANT's experience and qualifications and represent the PROFESSIONAL CONSULTANT's judgement in accordance with the "Standard of Care". The PROFESSIONAL CONSULTANT cannot and does not guarantee that proposals,

bids or actual PROJECT or construction costs will not vary from estimates prepared by the PROFESSIONAL CONSULTANT.

B. The CITY understands that the construction cost estimates developed by the PROFESSIONAL CONSULTANT do not establish a limit for construction contract amount. If the actual amount of the low construction bid exceeds the construction budget established by the CITY, the PROFESSIONAL CONSULTANT will not be required to re-design the PROJECT or any part thereof without additional compensation.

ARTICLE XVI - APPLICABLE LAWS

PROFESSIONAL CONSULTANT shall comply with all Federal, State, Local laws, ordinances, resolutions, specifications, regulations and all other laws or regulations relating or applicable to service to be performed under this AGREEMENT. Interpretation of this AGREEMENT and disputes arising out of or related to this AGREEMENT will be subject to and governed by the laws of the State of Arkansas. Jurisdiction and venue for any suit arising out of or related to this AGREEMENT will be in the District Court of Benton County, Arkansas.

ARTICLE XVII - PRECEDENCE

This AGREEMENT shall take precedence over any inconsistent or contradictory provisions contained in any proposal, contract, purchase order, requisition, notice to proceed, or any other like document regarding the PROJECT or PROFESSIONAL CONSULTANT's services.

ARTICLE XVIII - SEVERABILITY

A. In the event that one or more provisions contained herein shall, for any reason, be deemed invalid, illegal, void or unenforceable, in whole or in part, the remaining provisions hereof shall remain in full force and effect.

B. In the event that any provision hereof is in conflict with any statutory provision of the State of Arkansas, said provision, which may be in conflict therewith, shall be deemed inoperative, null and void insofar as it may be in conflict therewith, and shall be deemed modified to conform to such statutory provisions; provided, however, that the remaining provisions of this AGREEMENT will be unaffected and will continue to be valid and enforceable.

ARTICLE XIX - SURVIVAL OF OBLIGATIONS

The obligations of the Parties contained in this AGREEMENT, which by their nature survive after the term of the AGREEMENT, shall survive the termination or expiration of this AGREEMENT and continue indefinitely or as otherwise provided by this AGREEMENT.

ARTICLE XX – ENTIRE AGREEMENT

This AGREEMENT, including all documents and Appendices included by reference herein, constitutes the entire agreement between the PARTIES and supersedes all prior agreements, whether oral or written, covering the same subject matter. This AGREEMENT may not be modified or amended except in writing, mutually agreed upon and accepted by both PARTIES to this AGREEMENT.

[This page has been intentionally left blank]

The cost of this AGREEMENT including all reimbursable expenses as described in the FEES AND SCHEDULE, **shall not exceed** the price determined by project in accordance with attached rate sheet unless otherwise approved by the CITY through an official AMENDMENT agreed and executed by CITY and PROFESSIONAL CONSULTANT.

IN WITNESS THEREOF, the CITY and PROFESSIONAL CONSULTANT have executed this AGREEMENT, the EFFECTIVE DATE of which is indicated on page 1 of this AGREEMENT.

CITY OF BENTONVILLE	POWER SYSTEM ENGINEERING, INC.
CITY	PROFESSIONAL CONSULTANT
	[redacted]
BY	BY
	JIM WEIKERT
MAYOR	VICE PRESIDENT, AUTOMATION
TITLE	TITLE
	8/9/2024
DATE SIGNED	DATE SIGNED

RESOLUTION NO._____

A RESOLUTION ALLOWING THE MAYOR AND CITY CLERK TO ENTER INTO AN AGREEMENT WITH POWER SYSTEM ENGINEERING, INC., TO ASSIST THE BENTONVILLE ELECTRIC UTILITY DEPARTMENT WITH FUTURE TECHNOLOGY; AND FOR OTHER PURPOSES.

WHEREAS, Power System Engineering Inc. will assist with RFQs and RFPs to select and oversee BEUD's future tech purchases for the recently installed AMI system;

WHEREAS, Power System Engineering Inc. was selected for this service pursuant to the City of Bentonville's selection process in accordance with state law; and

WHEREAS, this is a budgeted item, and no adjustment is needed.

NOW, THEREFORE, BE IT RESOLVED BY THE CITY COUNCIL OF THE CITY OF BENTONVILLE, ARKANSAS THAT:

Section 1: The Mayor and City Clerk are authorized to enter into an agreement with Power System Engineering, to provide assistance with future tech purchases for the Bentonville Electric Utility Department;

Section 2 - Severability Provision: If any part of this Resolution is held invalid, the remainder of this Resolution shall continue in effect as if such invalid portion never existed; and

Section 3 - Repeal of Conflicting Provisions: All Ordinances, Resolutions, or Orders of the City Council, or parts of the same, in conflict with this Resolution are repealed to the extent of such conflict.

PASSED this _____ day of _____, 2024.

APPROVED:

_____
STEPHANIE ORMAN, Mayor

ATTEST:

_____
MALORIE MARRS, City Clerk

City of Bentonville, Arkansas Agenda Item Form

Item Details

Council Meeting Date:	8/27/2024	**Submitted By:**	Travis Matlock
Phone:	479-271-5941	**For Department(s):**	Inventory Warehouse
Email:	tmatlock@bentonvillear.com		

Item Type (Check all that apply)

☐ **Informational** ☑ **Bid Award** ☐ **Enter into an Agreement** ☐ **Change Order**
☐ **Recognizing Funds** ☐ **Budget Adjustment** ☐ **Waiver of Bid** ☐ **Emergency Clause**
☐ **Ordinance** ☑ **Resolution** ☐ **Informational**

Title, Recommendation & Justification

Title:	Resolution to Award Bid IFB-24-50 to Techline & Arkansas Electric Cooperative for Electric Materials
Action Recommendation & Justification:	Resolution to award bid IFB-24-50-Electric Material to Techline, Inc. and Arkansas Electric Cooperative, Inc. per the unit prices and estimated quantities attached, plus applicable taxes. This bid is to replenish electric stock materials. Approved by Utility Board 5-0. No budget adjustment is needed.
Additional Comments for Consideration (Optional):	Lowest bidders: Arkansas Electric in the amount of $39,850.50 Techline in the amount of $78,071.70
Amount for Approval:	$ 117,922.20

Budget Impact

Is this Item Budgeted? ☑ **YES** ☐ **NO** ☐ **ITEM HAS NO COST** ☐ **OTHER:**_____

Budget Adjustment *(to be completed by Finance when applicable)*

		$	$
Account Number (ORG-OBJECT)	Account Description	Expense	Revenue
		$	$
Account Number (ORG-OBJECT)	Account Description	Expense	Revenue
		$	$
Account Number (ORG-OBJECT)	Account Description	Expense	Revenue
		$	$
Account Number (ORG-OBJECT)	Account Description	Expense	Revenue

Fund(s) Impacted (check all that apply) ☐ **General Fund** ☐ **Utility Fund** ☐ **Street Fund** ☐ **Other(s):**_____

Budget Impact Notes for Consideration (Optional):

CITY OF BENTONVILLE, ARKANSAS PURCHASING DEPARTMENT

FORMAL SEALED BID TABULATION

Date of Bid Opening:	7/23/2024	Time of Bid Opening:	1:30 PM	IFB-24-50

Solicitation Title: Electric Material

Line Item	Quantity	Unit of Measure	BEUD Part #	Description	AECI Unit Price	Techline Unit Price
1	4	EA	1470	ENCLOSURE BURIAL CONCAST 200 AMP 3PH. LID FIBERCRETE MOUNTING PAD LID FC-37-73-2-3PH-1 (NO SUB)	$752.00	$775.75
2	50	EA	1524	FUSE CUTOUT 100 AMP POLYMR-MPS #SC15-H-G-1-10-B-D90 (NO SUB)	$170.15	$214.84
3	400	EA	1567	FUSETRON FUSE HOLDER SHAWMUT FEB-21-21 (NO SUB)	No Bid	$30.57
4	120	EA	1634	INSULATOR SUSPEN/DEADEND OHIO BRASS #401015-0215	$17.90	$17.69
5	400	EA	1711	PIN SADDLE CHANCE 14322 OR MACLEAN J3322Z	$28.15	$33.26
6	200	EA	1716	PLUG STAND-OFF ELASTIMOLD #161SOP (NO SUB)	No Bid	$71.56
7	120	EA	1885	STIRRUP 477 ACSR 336.4-954 AHLS954922E (NO SUB)	$60.11	$54.17
8	250	EA	1042	ARRESTOR LIGHTNING 10KV COOPER #UNS10050A1A1B1A (NO SUB)	$46.70	No Bid
9	210	EA	1154	CAP PROTECTIVE/INSULATED GROUND ELASTIMOLD #167-DRG (NO SUB)	No Bid	$51.40
10	100	EA	1370	CONDUIT STANDOFF BRKT. 12" ALUMFORM #9-CSO-12-4WT (NO SUB)	$54.00	No Bid
11	150	EA	1449	ELBOW 1/0 15KV 220MIL #162LRJS-B-5240 W/T.POINT INSUL. DIA. 16.0 - 23.1 (NO SUB)	No Bid	$71.43
12	100	EA	1636	KADDAS KE-1068BGR FUSE CUTOUT COVER (NO SUB)	$21.48	$22.80
13	100	EA	1637	KADDAS KE-1077A TRANSFORMER BUSHING CAP (NO SUB)	$15.96	$17.03
14	2	EA	1922	SWITCHGEAR AIS-9 3PH DEADFRONT CHANCE #A090A2OU (NO SUB)	$21,848.00	$24,221.89
15	10,000	FT	2183	WIRE 4/0 TRI-U/G SWEETBRIAR 4/0-4/0-2/0 (1000' REELS) PHASES MUST BE MARKED	$2.24	$2.14

purchasing@bentonvillear.com - (479) 271-3115

RESOLUTION NO. _____

A RESOLUTION AWARDING BID IFB-24-50, TO THE LOWEST RESPONSIVE BIDDERS, FOR ELECTRIC MATERIALS IN AN APPROXIMATE AMOUNT OF ONE HUNDRED SEVENTEEN THOUSAND NINE HUNDRED TWENTY-TWO DOLLARS AND TWENTY CENTS ($117,922.20), PLUS APPLICABLE TAXES; AND FOR OTHER PURPOSES.

WHEREAS, Techline and Arkansas Electric were the lowest responsive bidders for bid IFB-24-50;

WHEREAS, this agreement covers various electric materials per the unit prices and estimated quantities attached, plus applicable taxes; and

WHEREAS, this will be paid with budgeted funds.

NOW, THEREFORE, BE IT RESOLVED BY THE CITY COUNCIL OF THE CITY OF BENTONVILLE, ARKANSAS THAT:

Section 1: The Mayor and City Clerk are authorized to enter into agreements with Techline and Arkansas Electric, the lowest responsive bidders for certain electric materials pursuant to IFB-24-50;

Section 2: The estimated contract costs are one hundred seventeen thousand nine hundred twenty-two dollars and twenty cents ($117,922.20), plus applicable taxes;

Section 3 - Severability Provision: If any part of this Resolution is held invalid, the remainder of this Resolution shall continue in effect as if such invalid portion never existed; and

Section 4 - Repeal of Conflicting Provisions: All Ordinances, Resolutions, or Orders of the City Council, or parts of the same, in conflict with this Resolution are repealed to the extent of such conflict.

PASSED and APPROVED this _____ day of _____, 2024.

APPROVED:

_____

STEPHANIE ORMAN, MAYOR

ATTEST:

_____

MALORIE MARRS, CITY CLERK

Consent Agenda Item LS24-0016

For the Planning Commission meeting on August 27, 2024

Details

Lot Split: Lot 3 of Featherston Valley Subdivision Creating Lots 5, 6, 7, 8, and 9, NWA Multiplex Investors LLC, Featherston Road & Been Road, R-2, Medium-Density Residential, *LS24-0016*

A lot split of lot 3 of creating new Lots 5, 6, 7, 8, and 9 of Featherston Valley Subdivision. Per the requirements of the current Master Street Plan, the existing right-of-way is adequate along Southwest Mellow Avenue and Endurance Avenue. the plat will dedicate a 20 foot utility easement alongside sw mellow avenue and endurance ave on lot 7, 9, and 8. a drainage and utility easement is being dedicated on lot 6. the plat is dedicating 4,810 sq. ft. of right of way along been road.

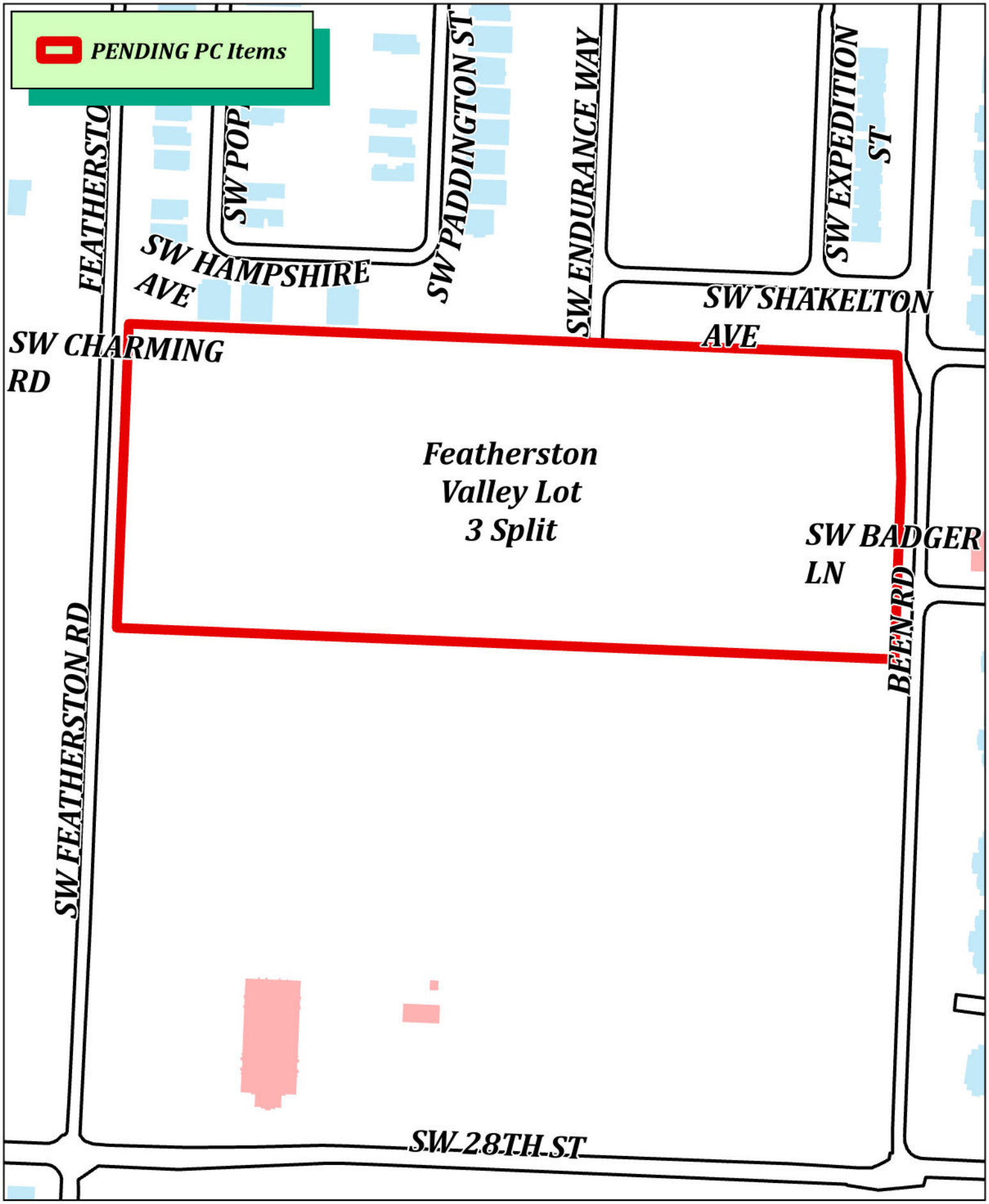

N
W E
S

LS24-0016
Featherston Valley Lot 3 Split
Lot Split

FEATHERSTON VALLEY SUBDIVISION

Single-Family Development - Lots 5-9

A Replat of Lot 3, Featherston Valley Subdivision,

in Part of the SW1/4 SW1/4, Section 2, T-19-N, R-31-W

BENTONVILLE, BENTON COUNTY, ARKANSAS

Filing Block

VICINITY MAP

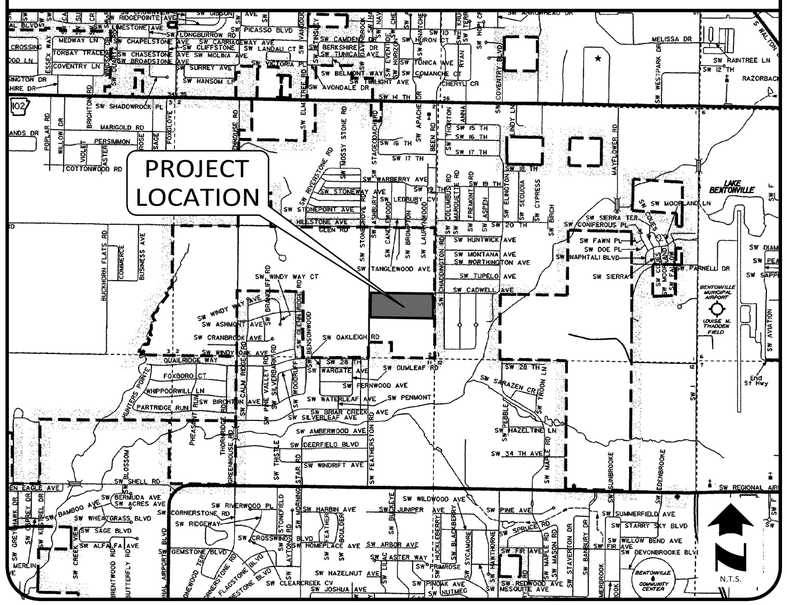

GENERAL NOTES:

- Basis of Bearings: Grid North, State Plane Coordinate System, Arkansas North Zone (0301), NAD 83 (2011)(Epoch:2010.0000), based on Real Time Kinematic (RTK) GNSS Observations derived from a Static GNSS Base and OPUS post-processed solution, having published values of: Latitude 36°22'07.78094" N; Longitude 94°15'27.13442" W; Convergence Angle = -1.31365833 degrees; and a computed Combined Scale Factor (Grid to Ground) of 1.00002661.
- Vertical Datum: NAVD88 (Geoid 18). Orthometric heights and contours are derived from Terrestrial and RTK GNSS Observations based on an OPUS post-processed solution having an ellipsoid height of: 356.921 m and computed orthometric height of 386.223m/1267.13 feet.
- Grid North Convergence: At the southwest corner of Lot 62, The Farms Subdivision, rotate from Grid North 01°18'49" to the left for True (Geodetic) North.
- Flood Information: Based upon review of NFIP FIRM, Benton County, Arkansas, and Incorporated Areas, Map Number 05007C0235K, Map Revised, June 5, 2012, and by graphic plotting only, the subject property lies within: Zone X-Other Areas, areas determined to be outside the 0.2% annual chance floodplain. Surveyor assumes no liability for the correctness of cited map and flood statement does not cover localized flooding.
- Every recorded document reviewed and considered as a part of this survey is noted hereon. Surveyor has not made a thorough investigation or independent search for any easements or other encumbrances or facts that an accurate, complete and current title search and/or title commitment would disclose. Other documents of record, rights of others, or facts, may exist and affect this subject property.
- Subsurface or environmental conditions were not examined or considered as a part of this survey, except for underground storm pipes and sanitary sewer pipes observed at the time of the field survey.
- Existing utilities shown hereon were located by reasonable visual observed surface improvements and the results of an Arkansas One-Call request and paint marks, Ticket No. 211123-0418 unless noted otherwise. The depths and /or heights of utilities were not measured unless noted with an elevation hereon. The locations of surface or subsurface utilities and improvements may differ from that depicted hereon and the locations of all utilities or the existence of additional subsurface utilities or improvements not shown, should be verified before any excavations are made.
- There are no waivers, variances and/or conditional uses at the time of preparing this plat or plan.

CITY DEVELOPMENT NOTES:

- Before any work in the right-of-way commences, contractor and or owner is to obtain right-of-way permit for the City of Bentonville Transportation Department.
- Owner/Developer shall coordinate with all local utilities to ensure that each lot has water, sewer, and electric service.
- Sidewalk construction shall be the responsibility of the builder or owner/developer at the time of building permit issuance and in accordance with the City of Bentonville design standards. Handicap accessible ramps and sidewalks along non-buildable lot frontages shall be constructed by the developer. Builders building within lots or owner/developer shall be responsible for the replacement of any existing sidewalks or ADA ramps damaged during construction.
- There shall be no fences, or any other structures built within any Drainage easement.
- Current Zoning is R-2 Medium Density Two Family and Townhome Residential Purpose. Setbacks shall be per the current zoning district as stated in the most recent City of Bentonville Zoning Code. For more info visit www.bentonvilleplanning.com or call the Planning Department @ 479-271-3122
- No Wetlands

LEGEND

	Ex. Section Line
	Ex. Quarter Section Line
	Ex. Quarter Quarter Section Line
	Ex. Boundary Line
	Ex. Adjacent Boundary Line
	Lot Line
R/W	Ex. Right of Way Line
R/W	Dedicated Right of Way Line
	Ex. Road Centerline
	Road Centerline
	Ex. Easement Line
	Dedicated Easement Line
25'BSL	Building Setback Line
○	Set 1/2" Rebar w/ PS# 1374 Cap
∅	Set Mag Nail w/ PS# 1374 Washer
●	Ex. Rebar
●	Ex. Nail
✖	Ex. Chiseled "X"
D/E	Drainage Easement
U/E	Utility Easement
	Dedicated Right-of-Way By This Plat

CERTIFICATE OF OWNERSHIP:

We the undersigned, owners of the real estate shown and described herein, do hereby certify that we have laid off, platted, and subdivided and do hereby lay off, plat, subdivide said real estate in accordance with this plat and do hereby dedicate to the use of the public the streets, alleys, drives, easements, etc. as shown on said plat.

Date of Execution: _____

Signed: _____

Name & Address _____

Print Name: _____

State Of Arkansas)
) SS
County Of Benton)

Sworn To And Subscribed Before Me This _____ Day Of _____, 2024.

Notary Public _____

My Commission Expires _____

CERTIFICATE OF APPROVAL:

Pursuant to the Bentonville subdivision regulations and all other conditions and approval having been completed, this document is hereby accepted. this certificate is hereby executed under the authority of the said rules and regulations.

Date Of Execution: _____

Signed _____
Bentonville Planning Commission Chairman

Signed _____
Mayor, City Of Bentonville

Signed _____
City Clerk, City Of Bentonville

CERTIFICATE OF SURVEYING ACCURACY:

I, James S. Aunspaugh, hereby certify that this plat correctly represents a boundary survey made by me and boundary markers and lot corners shown hereon actually exist and their location, type and material are correctly shown and all minimum requirements of the Arkansas Minimum Standards for Land Surveyors have been met.

Date of Execution: _____

PRELIMINARY

CERTIFICATE OF AUTHORIZATION
HALFF ASSOCIATES, INC.
No. 1470
ARKANSAS

Signed: _____
James S. Aunspaugh, Arkansas PS #1374

OWNER / DEVELOPER
NWA Multiplex Investors LLC
1603 NW Santorini Lane
Bentonville, AR 72712
Contact: Srinivas Balaji
Telephone: (479) 616-8726

SURVEYOR
Halff
2407 SE Cottonwood St.
Bentonville, AR 72712
Contact: James S. Aunspaugh, PS
Telephone: 397-0323

halff
HALFF ASSOCIATES, INC.
2407 SE COTTONWOOD ST. STE 1
BENTONVILLE, AR 72712
479.273.2209 - HALFF.COM

LOT SPLIT

Lot 3 of Featherston Valley Subdivision
Creating Lots 5, 6, 7, 8, and 9
Bentonville, Benton County, Arkansas

Prepared For:
NWA Multiplex Investors LLC

FEATHERSTON VALLEY SUBDIVISION

City of Bentonville Project Number: LS24-0016
Atlas Page: 442

Revisions

1	05.20.2024 Revised Lot Split Plans per City Comments
2	06.03.2024 Revised Lot Split Plans per City Comments
2	06.04.2024 Revised Right-Of-Way 1 & Lot 8

Drawn By:	JDS	Vert. Scale:	N/A
Approved By:	JSA	Horiz. Scale:	N/A
Date:	04.18.2024	Plot Scale:	1
Project No.:	NWA-01 56524	DWG Name:	PLAT

SHEET 1 of 5

Drawing Name: A:\56000s\56524\001\SURV\CADD\Sheets\V-PLAN-LOT SPLIT-56524.dwg Last Modified: Jun 11, 2024 – 4:57pm Plotted on: Jun 17, 2024 – 10:31am by ah5165

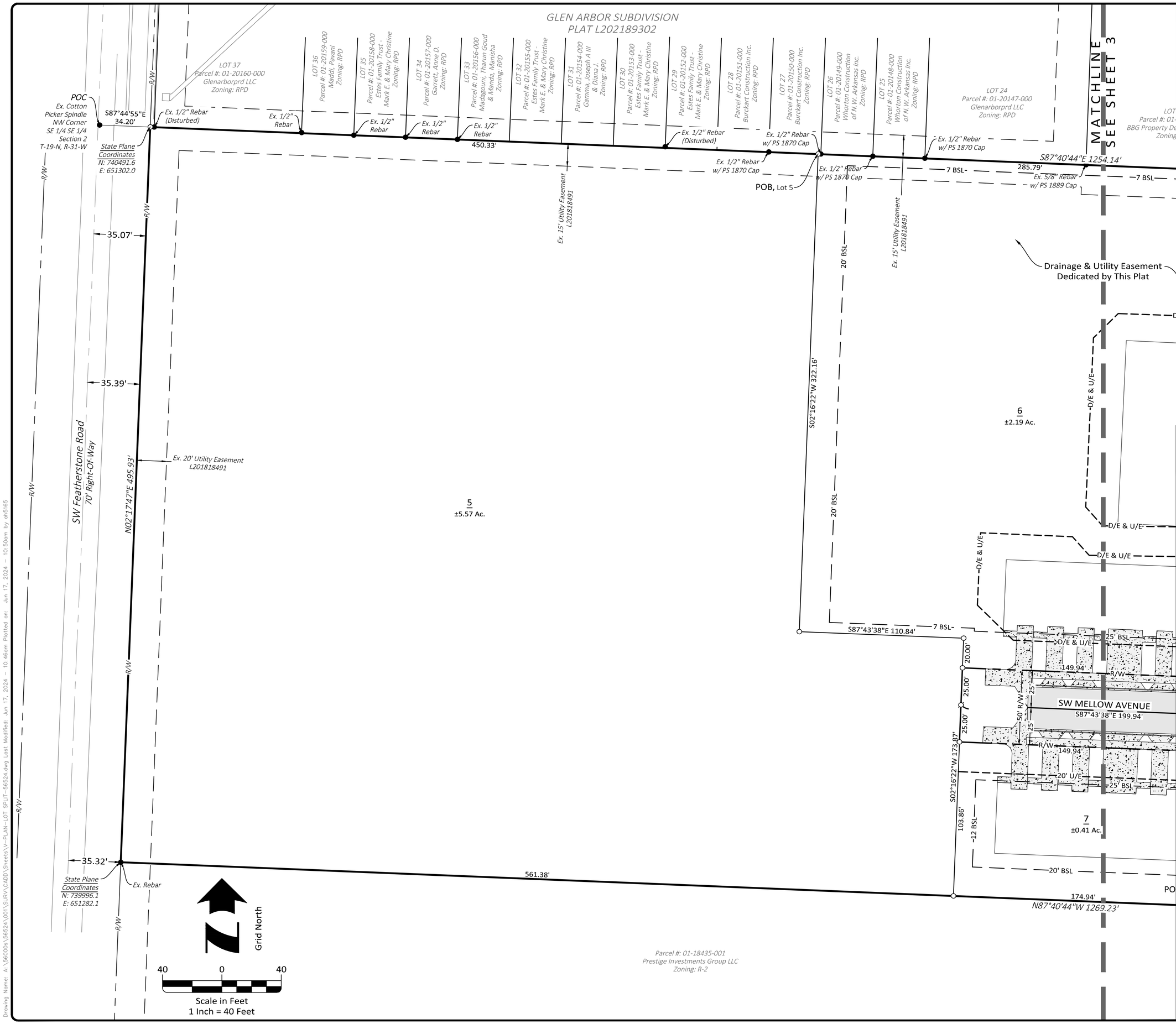

Curve Table

Curve #	Length	Radius	Tangent	Chord Bearing	Chord Length
C1	78.54'	50.00'	50.00'	S 42° 43' 38" E	70.71'
C2	78.54'	50.00'	50.00'	S 47° 16' 22" W	70.71'
C3	39.27'	25.00'	25.00'	S 42° 43' 38" E	35.36'
C4	39.27'	25.00'	25.00'	S 47° 16' 22" W	35.36'
C5	39.27'	25.00'	25.00'	N 42° 43' 38" W	35.36'
C6	117.81'	75.00'	75.00'	N 42° 43' 38" W	106.07'
C7	117.81'	75.00'	75.00'	N 47° 16' 22" E	106.07'
C8	39.27'	25.00'	25.00'	N 47° 16' 22" E	35.36'
C9	39.27'	25.00'	25.00'	N 42° 43' 38" W	35.36'
C10	39.27'	25.00'	25.00'	N 47° 16' 22" E	35.36'
C11	39.27'	25.00'	25.00'	S 42° 43' 38" E	35.36'
C12	39.27'	25.00'	25.00'	S 47° 16' 22" W	35.36'

PRELIMINARY

halff
HALFF ASSOCIATES, INC.
2407 SE COTTONWOOD ST. STE 1
BENTONVILLE, AR 72712
479.273.2209 - HALFF.COM

LOT SPLIT

Lot 3 of Featherston Valley Subdivision
Creating Lots 5, 6, 7, 8, and 9
Bentonville, Benton County, Arkansas

Prepared For:
NWA Multiplex Investors LLC

FEATHERSTON VALLEY SUBDIVISION

City of Bentonville Project Number: LS24-0016
Atlas Page: 442

Revisions

1	05.20.2024 Revised Lot Split Plans per City Comments
2	06.03.2024 Revised Lot Split Plans per City Comments
2	06.04.2024 Revised Right-Of-Way 1 & Lot 8

Drawn By:	JDS	Vert. Scale:	N/A
Approved By:	JSA	Horiz. Scale:	1" = 40'
Date:	04.18.2024	Plot Scale:	1
Project No.:	NWA-01 56524	DWG Name:	PLAT

SHEET **2** of 5

Drawing Name: A:\56000s\56524\001\SURV\CADD\Sheets\V-PLAN-LOT SPLIT-56524.dwg Last Modified: Jun 17, 2024 - 10:46am Plotted on: Jun 17, 2024 - 10:50am by ah5165

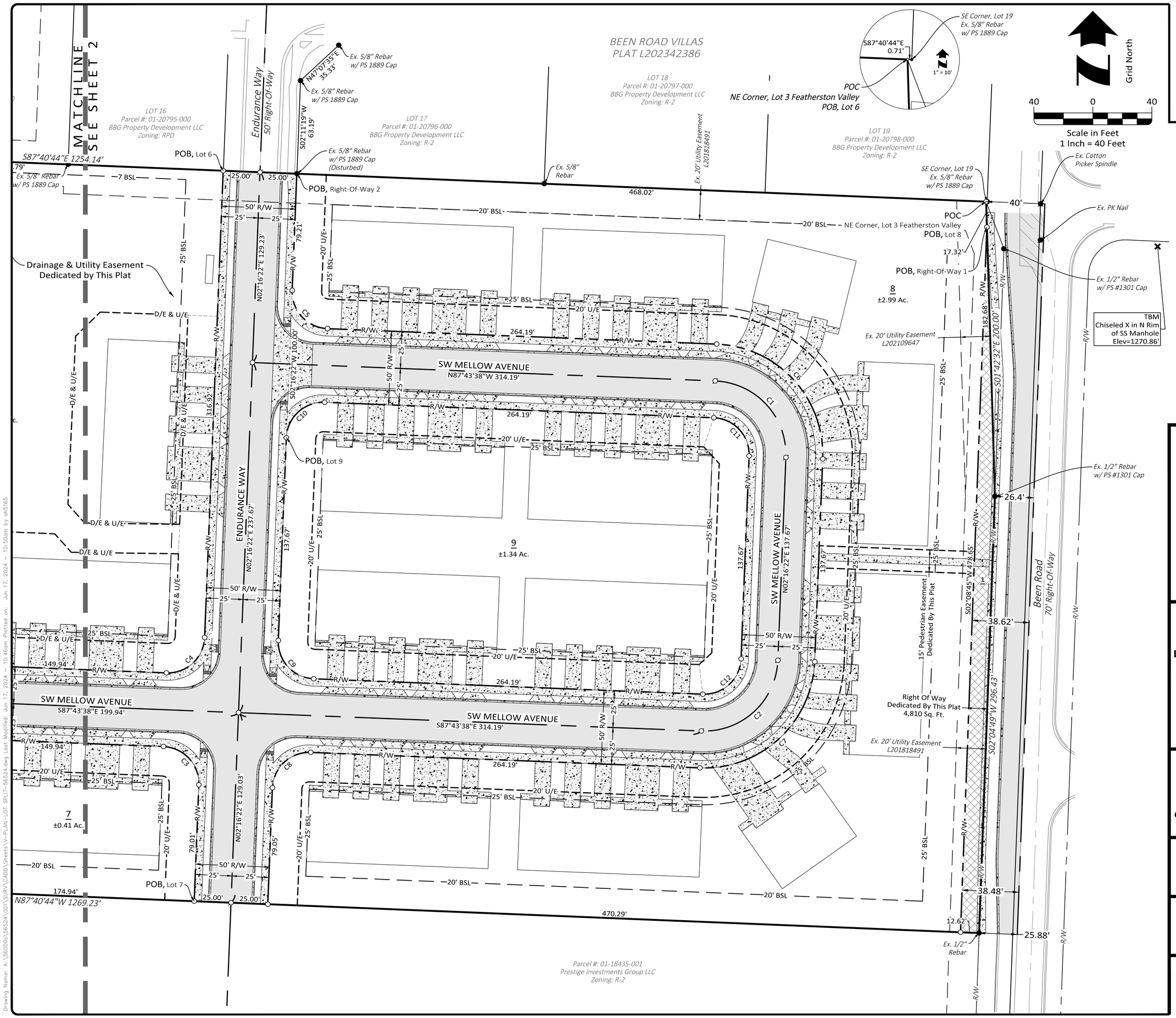

Filing Block

Curve Table					
Curve #	Length	Radius	Tangent	Chord Bearing	Chord Length
C1	78.54'	50.00'	50.00'	S 42° 43' 38" E	70.71'
C2	78.54'	50.00'	50.00'	S 47° 16' 22" W	70.71'
C3	39.27'	25.00'	25.00'	S 42° 43' 38" E	35.36'
C4	39.27'	25.00'	25.00'	S 47° 16' 22" W	35.36'
C5	39.27'	25.00'	25.00'	N 42° 43' 38" W	35.36'
C6	117.81'	75.00'	75.00'	N 42° 43' 38" W	106.07'
C7	117.81'	75.00'	75.00'	N 47° 16' 22" E	106.07'
C8	39.27'	25.00'	25.00'	N 47° 16' 22" E	35.36'
C9	39.27'	25.00'	25.00'	N 42° 43' 38" W	35.36'
C10	39.27'	25.00'	25.00'	N 47° 16' 22" E	35.36'
C11	39.27'	25.00'	25.00'	S 42° 43' 38" E	35.36'
C12	39.27'	25.00'	25.00'	S 47° 16' 22" W	35.36'

PRELIMINARY

halff
HALFF ASSOCIATES, INC.
2407 SE COTTONWOOD ST. STE 1
BENTONVILLE, AR 72712
479.273.2209 - HALFF.COM

LOT SPLIT

Lot 3 of Featherston Valley Subdivision
Creating Lots 5, 6, 7, 8, and 9
Bentonville, Benton County, Arkansas

Prepared For:
NWA Multiplex Investors LLC

FEATHERSTON VALLEY SUBDIVISION

City of Bentonville Project Number: LS24-0016
Atlas Page: 442

Revisions

1	05.20.2024 Revised Lot Split Plans per City Comments
2	06.03.2024 Revised Lot Split Plans per City Comments
2	06.04.2024 Revised Right-Of-Way 1 & Lot 8

Drawn By:	JDS	Vert. Scale:	N/A
Approved By:	JSA	Horiz. Scale:	1" = 40'
Date:	04.18.2024	Plot Scale:	1
Project No.:	NWA-01 56524	DWG Name:	PLAT

SHEET **3** of 5

Drawing Name: A:\56000s\56524\001\SURV\CADD\Sheets\V-PLAN-LOT SPLIT-56524.dwg Last Modified: Jun 17, 2024 – 10:46am Plotted on: Jun 17, 2024 – 10:50am by ah5165

PARENT TRACT - LOT 3 FEATHERSTON VALLEY SUBDIVISION L202109647:

LOT 3 PER LOT SPLIT RECORDED IN/AS L202109647, BEING: PART OF LOT 2 OF FEATHERSTON VALLEY SUBDIVISION, INSTRUMENT #L201818491, BEING RECORDED IN THE OFFICE OF THE EXOFFICIO RECORDER OF BENTON COUNTY, IN THE CITY OF BENTONVILLE, BENTON COUNTY, ARKANSAS, BEING MORE PARTICULARLY DESCRIBED AS FOLLOWS: BEGINNING AT A SET IRON PIN FOR THE NE CORNER OF LOT 2 OF FEATHERSTON VALLEY SUBDIVISION; THENCE S01°42'32"E 200.00 FEET TO A SET IRON PIN ON THE EAST LINE OF LOT 2; THENCE ALONG SAID EAST LINE, S02°04'49"W 296.43 FEET TO A SET IRON PIN; THENCE LEAVING SAID EAST LINE, N87°40'44" W 1,269.23 FEET TO A SET IRON PIN ON THE WEST LINE OF LOT 2; THENCE ALONG SAID WEST LINE, N02°17'47" E 495.93 FEET TO A SET IRON PIN FOR THE NW CORNER OF LOT 2; THENCE S87°40'44"E 1,254.14 FEET TO THE POINT OF BEGINNING; CONTAINING 627,671.62 SQ. FT, 14.41 ACRES, MORE OR LESS, BEING SUBJECT TO COVENANTS, EASEMENTS AND RIGHTS-OF-WAY OF RECORD OR FACT.

RIGHT OF WAY DESCRIPTION 1:

PART OF LOT 3 FEATHERSTON VALLEY SUBDIVISION PER LOT SPLIT RECORDED IN/AS L202109647, BEING RECORDED IN THE OFFICE OF THE EXOFFICIO RECORDER OF BENTON COUNTY, IN THE CITY OF BENTONVILLE, BENTON COUNTY, ARKANSAS, BEING MORE PARTICULARLY DESCRIBED AS FOLLOWS:

COMMENCING AT A 1/2" REBAR W/ 1374 CAP FOR THE NE CORNER OF LOT 3 OF FEATHERSTON VALLEY SUBDIVISION; THENCE S01°42'32"E 17.32 FEET TO A 1/2" REBAR W/ 1374 CAP & THE POINT OF BEGINNING ON THE EAST LINE OF SAID LOT 3; THENCE S01°42'32"E 182.68 FEET TO A 1/2" REBAR W/ 1301 CAP ON THE EAST LINE OF SAID LOT 3; THENCE S02°04'49"W 296.43 FEET TO A 1/2" REBAR FOR THE SE CORNER OF LOT 3 OF FEATHERSTON VALLEY SUBDIVISION; THENCE N87°40'44"W 12.62 FEET TO A 1/2" REBAR W/ PS 1374 CAP ON THE SOUTH LINE OF SAID LOT 3; THENCE N02°08'45"E 478.65 FEET TO A 1/2" REBAR W/ 1374 CAP AND THE POINT OF BEGINNING;

RIGHT-OF-WAY 2 DESCRIPTION:

PART OF LOT 3 FEATHERSTON VALLEY SUBDIVISION PER LOT SPLIT RECORDED IN/AS L202109647, BEING RECORDED IN THE OFFICE OF THE EXOFFICIO RECORDER OF BENTON COUNTY, IN THE CITY OF BENTONVILLE, BENTON COUNTY, ARKANSAS, BEING MORE PARTICULARLY DESCRIBED AS FOLLOWS:

COMMENCING AT A 1/2" REBAR W/ 1374 CAP FOR THE NE CORNER OF LOT 3 OF FEATHERSTON VALLEY SUBDIVISION; THENCE ALONG THE NORTH LINE OF SAID LOT 3 N87°40'44"W 468.02 FEET TO A 5/8" REBAR W/ PS 1889 CAP & THE POINT OF BEGINNING; THENCE S02°16'22"W 79.21 FEET TO A 1/2" REBAR W/ PS 1374 CAP; THENCE ALONG A CURVE TO THE LEFT HAVING A RADIUS OF 25.00 FEET, ARC LENGTH OF 39.27 FEET, CHORD BEARING OF S42°43'38"E AND A CHORD DISTANCE OF 35.36 FEET TO A 1/2" REBAR W/ 1374 CAP; THENCE S87°43'38"E 264.19 FEET TO A 1/2" REBAR W/ PS 1374 CAP; THENCE ALONG A CURVE TO THE RIGHT HAVING A RADIUS OF 75.00 FEET, ARC LENGTH OF 117.81 FEET, CHORD BEARING OF S42°43'38"E AND A CHORD DISTANCE OF 106.07 FEET TO A 1/2" REBAR W/ 1374 CAP; THENCE S02°16'22"W 137.67 FEET TO A 1/2" REBAR W/ PS 1374 CAP; THENCE ALONG A CURVE TO THE RIGHT HAVING A RADIUS OF 75.00 FEET, ARC LENGTH OF 117.81 FEET, CHORD BEARING OF S47°16'22"W AND A CHORD DISTANCE OF 106.07 FEET TO A 1/2" REBAR W/ 1374 CAP; THENCE N87°43'38"W 264.19 FEET TO A 1/2" REBAR W/ PS 1374 CAP; THENCE ALONG A CURVE TO THE LEFT HAVING A RADIUS OF 25.00 FEET, ARC LENGTH OF 39.27 FEET, CHORD BEARING OF S47°16'22"W AND A CHORD DISTANCE OF 35.36 FEET TO A 1/2" REBAR W/ 1374 CAP; THENCE S02°16'22"W 79.05 FEET TO A 1/2" REBAR W/ PS 1374 CAP ON THE SOUTH LINE OF SAID LOT 3; THENCE ALONG SAID SOUTH LINE N87°40'44"W 50.00 FEET TO A 1/2" REBAR W/ PS 1374 CAP; THENCE LEAVING SAID SOUTH LINE N02°16'22"E 79.01 FEET TO A 1/2" REBAR W/ PS 1374 CAP; THENCE ALONG A CURVE TO THE LEFT HAVING A RADIUS OF 25.00 FEET, ARC LENGTH OF 39.27 FEET, CHORD BEARING OF N42°43'38"W AND A CHORD DISTANCE OF 35.36 FEET TO A 1/2" REBAR W/ 1374 CAP; THENCE N87°43'38"W 149.94 FEET TO A 1/2" REBAR W/ PS 1374 CAP; THENCE N02°16'22"E 50.00 FEET TO A 1/2" REBAR W/ PS 1374 CAP; THENCE S87°43'38"E 149.94 FEET TO A 1/2" REBAR W/ PS 1374 CAP; THENCE ALONG A CURVE TO THE LEFT HAVING A RADIUS OF 25.00 FEET, ARC LENGTH OF 39.27 FEET, CHORD BEARING OF N47°16'22"E AND A CHORD DISTANCE OF 35.36 FEET TO A 1/2" REBAR W/ 1374 CAP; THENCE N02°16'22"E 316.92 FEET TO A 1/2" REBAR W/ PS 1374 CAP ON THE NORTH LINE OF SAID LOT 3; THENCE ALONG SAID NORTH LINE S87°40'44"E 50.00 FEET TO A 5/8" REBAR W/ PS 1889 CAP AND THE POINT OF BEGINNING;

LESS AND EXCEPT (TO BE KNOWN AS LOT 9):

COMMENCING AT A 1/2" REBAR W/ 1374 CAP FOR THE NE CORNER OF LOT 3 OF FEATHERSTON VALLEY SUBDIVISION; THENCE ALONG THE NORTH LINE OF SAID LOT 3 N87°40'44"W 468.02 FEET TO A 5/8" REBAR W/ PS 1889 CAP; THENCE LEAVING SAID NORTH LINE S02°16'22"W 179.21 FEET TO A 1/2" REBAR W/ PS 1374 CAP TO THE POINT OF BEGINNING; THENCE ALONG A CURVE TO THE RIGHT HAVING A RADIUS OF 25.00 FEET, ARC LENGTH OF 39.27 FEET, CHORD BEARING OF N47°16'22"E AND A CHORD DISTANCE OF 35.36 FEET TO A 1/2" REBAR W/ 1374 CAP; THENCE S87°43'38"E 264.19 FEET TO A 1/2" REBAR W/ PS 1374 CAP; THENCE ALONG A CURVE TO THE RIGHT HAVING A RADIUS OF 25.00 FEET, ARC LENGTH OF 39.27 FEET, CHORD BEARING OF S42°43'38"E AND A CHORD DISTANCE OF 35.36 FEET TO A 1/2" REBAR W/ 1374 CAP; THENCE S02°16'22"W 137.67 FEET TO A 1/2" REBAR W/ PS 1374 CAP; THENCE ALONG A CURVE TO THE RIGHT HAVING A RADIUS OF 25.00 FEET, ARC LENGTH OF 39.27 FEET, CHORD BEARING OF S47°16'22"W AND A CHORD DISTANCE OF 35.36 FEET TO A 1/2" REBAR W/ 1374 CAP; THENCE N87°43'38"W 264.19 FEET TO A 1/2" REBAR W/ PS 1374 CAP; THENCE ALONG A CURVE TO THE RIGHT HAVING A RADIUS OF 25.00 FEET, ARC LENGTH OF 39.27 FEET, CHORD BEARING OF N42°43'38"W AND A CHORD DISTANCE OF 35.36 FEET TO A 1/2" REBAR W/ 1374 CAP; THENCE N02°16'22"E 137.67 FEET TO A 1/2" REBAR W/ PS 1374 CAP TO THE POINT OF BEGINNING;

LOT 5 DESCRIPTION:

PART OF LOT 3 FEATHERSTON VALLEY SUBDIVISION PER LOT SPLIT RECORDED IN/AS L202109647, BEING RECORDED IN THE OFFICE OF THE EXOFFICIO RECORDER OF BENTON COUNTY, IN THE CITY OF BENTONVILLE, BENTON COUNTY, ARKANSAS, BEING MORE PARTICULARLY DESCRIBED AS FOLLOWS:

COMMENCING AT A 1/2" REBAR W/ 1374 CAP FOR THE NE CORNER OF LOT 3 OF FEATHERSTON VALLEY SUBDIVISION; THENCE ALONG THE NORTH LINE OF SAID LOT 3 N87°40'44"W 803.81 FEET TO A 1/2" REBAR W/ PS 1374 CAP AND THE POINT OF BEGINNING; THENCE S02°16'22"W 322.16 FEET TO A 1/2" REBAR W/ PS 1374 CAP; THENCE S87°43'38"E 110.84 FEET TO A 1/2" REBAR W/ PS 1374 CAP; THENCE S02°16'22"W 173.87 FEET TO A 1/2" REBAR W/ PS 1374 CAP ON THE SOUTH LINE OF SAID LOT 3; THENCE ALONG SAID SOUTH LINE N87°40'44"W 561.38 FEET TO A REBAR ON THE WEST LINE OF SAID LOT 3; THENCE ALONG SAID WEST LINE N02°17'47"E 495.93 FEET TO A 1/2" REBAR W/ PS 1374 CAP ON THE NORTH LINE OF SAID LOT 3; THENCE ALONG SAID NORTH LINE S87°40'44"E 450.33 FEET TO A 1/2" REBAR W/ PS 1374 CAP AND THE POINT OF BEGINNING, CONTAINING 5.57 ACRES, MORE OR LESS, BEING SUBJECT TO COVENANTS, EASEMENTS AND RIGHTS-OF-WAY OF RECORD OR FACT.

LOT 6 DESCRIPTION:

PART OF LOT 3 FEATHERSTON VALLEY SUBDIVISION PER LOT SPLIT RECORDED IN/AS L202109647, BEING RECORDED IN THE OFFICE OF THE EXOFFICIO RECORDER OF BENTON COUNTY, IN THE CITY OF BENTONVILLE, BENTON COUNTY, ARKANSAS, BEING MORE PARTICULARLY DESCRIBED AS FOLLOWS:

COMMENCING AT A 1/2" REBAR W/ 1374 CAP FOR THE NE CORNER OF LOT 3 OF FEATHERSTON VALLEY SUBDIVISION; THENCE ALONG THE NORTH LINE OF SAID LOT 3 N87°40'44"W 518.02 FEET TO A 1/2" REBAR W/ PS 1374 CAP AND THE POINT OF BEGINNING; THENCE S02°16'22"W 316.92 FEET TO A 1/2" REBAR W/ PS 1374 CAP; THENCE ALONG A CURVE TO THE RIGHT HAVING A RADIUS OF 25.00 FEET, ARC LENGTH OF 39.27 FEET, CHORD BEARING OF S47°16'22"W AND A CHORD DISTANCE OF 35.36 FEET TO A 1/2" REBAR W/ 1374 CAP; THENCE N87°43'38"W 149.94 FEET TO A 1/2" REBAR W/ PS 1374 CAP; THENCE N02°16'22"E 20.00 FEET TO A 1/2" REBAR W/ PS 1374 CAP; THENCE N87°43'38"W 110.84 FEET TO A 1/2" REBAR W/ PS 1374 CAP; THENCE N02°16'22"E 322.16 FEET TO A 1/2" REBAR W/ PS 1374 CAP ON THE NORTH LINE OF SAID LOT 3; THENCE ALONG SAID NORTH LINE S87°40'44"E 285.79 FEET TO A 1/2" REBAR W/ PS 1374 CAP AND THE POINT OF BEGINNING, CONTAINING 2.19 ACRES, MORE OR LESS, BEING SUBJECT TO COVENANTS, EASEMENTS AND RIGHTS-OF-WAY OF RECORD OR FACT.

LOT 7 DESCRIPTION:

PART OF LOT 3 FEATHERSTON VALLEY SUBDIVISION PER LOT SPLIT RECORDED IN/AS L202109647, BEING RECORDED IN THE OFFICE OF THE EXOFFICIO RECORDER OF BENTON COUNTY, IN THE CITY OF BENTONVILLE, BENTON COUNTY, ARKANSAS, BEING MORE PARTICULARLY DESCRIBED AS FOLLOWS:

COMMENCING AT A 1/2" REBAR W/ 1374 CAP FOR THE NE CORNER OF LOT 3 OF FEATHERSTON VALLEY SUBDIVISION; THENCE S02°11'20"W 495.93 FEET TO A 1/2" REBAR ON THE SOUTH LINE OF LOT SAID LOT 3; THENCE ALONG SAID SOUTH LINE, N87°40'44"W 518.75 FEET TO A 1/2" REBAR W/ PS 1374 CAP TO THE POINT OF BEGINNING; THENCE CONTINUING ALONG SAID SOUTH LINE, N87°40'44" W 174.94 FEET TO A 1/2" REBAR W/ PS 1374 CAP; THENCE N02°16'22"E 103.86 FEET TO A 1/2" REBAR W/ PS 1374 CAP; THENCE S87°43'38"E 149.94 FEET TO A 1/2" REBAR W/ PS 1374 CAP; THENCE ALONG A CURVE TO THE RIGHT HAVING A RADIUS OF 25.00 FEET, ARC LENGTH OF 39.27 FEET, CHORD BEARING OF S42°43'38"E AND A CHORD DISTANCE OF 35.36 FEET TO A 1/2" REBAR W/ 1374 CAP; THENCE S02°16'22"W 79.01 FEET TO A 1/2" REBAR W/ PS 1374 CAP AND THE POINT OF BEGINNING, CONTAINING 0.41 ACRES, MORE OR LESS, BEING SUBJECT TO COVENANTS, EASEMENTS AND RIGHTS-OF-WAY OF RECORD OR FACT.

LOT 8 DESCRIPTION:

PART OF LOT 3 FEATHERSTON VALLEY SUBDIVISION PER LOT SPLIT RECORDED IN/AS L202109647, BEING RECORDED IN THE OFFICE OF THE EXOFFICIO RECORDER OF BENTON COUNTY, IN THE CITY OF BENTONVILLE, BENTON COUNTY, ARKANSAS, BEING MORE PARTICULARLY DESCRIBED AS FOLLOWS:

BEGINNING AT A 1/2" REBAR W/ 1374 CAP FOR THE NE CORNER OF LOT 3 OF FEATHERSTON VALLEY SUBDIVISION; THENCE S01°42'32"E 17.32 FEET TO A 1/2" REBAR W/ PS 1374 CAP; THENCE S02°08'45"W 478.65 FEET TO A 1/2" REBAR ON THE SOUTH LINE OF LOT SAID LOT 3; THENCE ALONG SAID SOUTH LINE, N87°40'44"W 470.29 FEET TO A 1/2" REBAR W/ PS 1374 CAP; THENCE LEAVING SAID SOUTH LINE, N02°16'22"E 79.05 FEET TO A 1/2" REBAR W/ PS 1374 CAP; THENCE ALONG A CURVE TO THE RIGHT HAVING A RADIUS OF 25.00 FEET, ARC LENGTH OF 39.27 FEET, CHORD BEARING OF N47°16'22"E AND A CHORD DISTANCE OF 35.36 FEET TO A 1/2" REBAR W/ 1374 CAP; THENCE S87°43'38"E 264.19 FEET TO A 1/2" REBAR W/ PS 1374 CAP; THENCE ALONG A CURVE TO THE LEFT HAVING A RADIUS OF 75.00 FEET, ARC LENGTH OF 117.81 FEET, CHORD BEARING OF N47°16'22"E AND A CHORD DISTANCE OF 106.07 FEET TO A 1/2" REBAR W/ 1374 CAP; THENCE N02°16'22"E 137.67 FEET TO A 1/2" REBAR W/ PS 1374 CAP; THENCE ALONG A CURVE TO THE LEFT HAVING A RADIUS OF 75.00 FEET, ARC LENGTH OF 117.81 FEET, CHORD BEARING OF N42°43'38"W AND A CHORD DISTANCE OF 106.07 FEET TO A 1/2" REBAR W/ 1374 CAP; THENCE N87°43'38"W 264.19 FEET TO A 1/2" REBAR W/ PS 1374 CAP; THENCE ALONG A CURVE TO THE RIGHT HAVING A RADIUS OF 25.00 FEET, ARC LENGTH OF 39.27 FEET, CHORD BEARING OF N42°43'38"W AND A CHORD DISTANCE OF 35.36 FEET TO A 1/2" REBAR W/ 1374 CAP; THENCE N02°16'22"E 79.21 FEET TO A 5/8" REBAR W/ PS 1889 CAP ON THE NORTH LINE OF SAID LOT 3; THENCE ALONG SAID NORTH LINE S87°40'44"E 468.02 FEET TO A 1/2" REBAR W/ PS 1374 CAP AND THE POINT OF BEGINNING, CONTAINING 2.98 ACRES, MORE OR LESS, BEING SUBJECT TO COVENANTS, EASEMENTS AND RIGHTS-OF-WAY OF RECORD OR FACT.

LOT 9 DESCRIPTION:

PART OF LOT 3 FEATHERSTON VALLEY SUBDIVISION PER LOT SPLIT RECORDED IN/AS L202109647, BEING RECORDED IN THE OFFICE OF THE EXOFFICIO RECORDER OF BENTON COUNTY, IN THE CITY OF BENTONVILLE, BENTON COUNTY, ARKANSAS, BEING MORE PARTICULARLY DESCRIBED AS FOLLOWS:

COMMENCING AT A 1/2" REBAR W/ 1374 CAP FOR THE NE CORNER OF LOT 3 OF FEATHERSTON VALLEY SUBDIVISION; THENCE ALONG THE NORTH LINE OF SAID LOT 3 N87°40'44"W 468.02 FEET TO A 5/8" REBAR W/ PS 1889 CAP; THENCE LEAVING SAID NORTH LINE S02°16'22"W 179.21 FEET TO A 1/2" REBAR W/ PS 1374 CAP TO THE POINT OF BEGINNING; THENCE ALONG A CURVE TO THE RIGHT HAVING A RADIUS OF 25.00 FEET, ARC LENGTH OF 39.27 FEET, CHORD BEARING OF N47°16'22"E AND A CHORD DISTANCE OF 35.36 FEET TO A 1/2" REBAR W/ 1374 CAP; THENCE S87°43'38"E 264.19 FEET TO A 1/2" REBAR W/ PS 1374 CAP; THENCE ALONG A CURVE TO THE RIGHT HAVING A RADIUS OF 25.00 FEET, ARC LENGTH OF 39.27 FEET, CHORD BEARING OF S42°43'38"E AND A CHORD DISTANCE OF 35.36 FEET TO A 1/2" REBAR W/ 1374 CAP; THENCE S02°16'22"W 137.67 FEET TO A 1/2" REBAR W/ PS 1374 CAP; THENCE ALONG A CURVE TO THE RIGHT HAVING A RADIUS OF 25.00 FEET, ARC LENGTH OF 39.27 FEET, CHORD BEARING OF S47°16'22"W AND A CHORD DISTANCE OF 35.36 FEET TO A 1/2" REBAR W/ 1374 CAP; THENCE N87°43'38"W 264.19 FEET TO A 1/2" REBAR W/ PS 1374 CAP; THENCE ALONG A CURVE TO THE RIGHT HAVING A RADIUS OF 25.00 FEET, ARC LENGTH OF 39.27 FEET, CHORD BEARING OF N42°43'38"W AND A CHORD DISTANCE OF 35.36 FEET TO A 1/2" REBAR W/ 1374 CAP; THENCE N02°16'22"E 137.67 FEET TO A 1/2" REBAR W/ PS 1374 CAP TO THE POINT OF BEGINNING, CONTAINING 1.34 ACRES, MORE OR LESS, BEING SUBJECT TO COVENANTS, EASEMENTS AND RIGHTS-OF-WAY OF RECORD OR FACT.

Filing Block

PRELIMINARY

halff

HALFF ASSOCIATES, INC.
2407 SE COTTONWOOD ST. STE 1
BENTONVILLE, AR 72712
479.273.2209 - HALFF.COM

LOT SPLIT

Lot 3 of Featherston Valley Subdivision
Creating Lots 5, 6, 7, 8, and 9
Bentonville, Benton County, Arkansas

Prepared For:
NWA Multiplex Investors LLC

FEATHERSTON VALLEY SUBDIVISION

City of Bentonville Project Number: LS24-0016
Atlas Page: 442

Revisions

1	05.20.2024 Revised Lot Split Plans per City Comments
2	06.03.2024 Revised Lot Split Plans per City Comments
2	06.04.2024 Revised Right-Of-Way 1 & Lot 8

Drawn By:	JDS	Vert. Scale:	N/A
Approved By:	JSA	Horiz. Scale:	N/A
Date:	04.18.2024	Plot Scale:	1
Project No.:	NWA-01 56524	DWG Name:	PLAT

SHEET 4 of 5

Drawing Name: A:\56000s\56524\001\SURV\CADD\Sheets\V-PLAN-LOT SPLIT-56524.dwg Last Modified: Jun 17, 2024 - 10:46am Plotted on: Jun 17, 2024 - 10:52am by oh5165

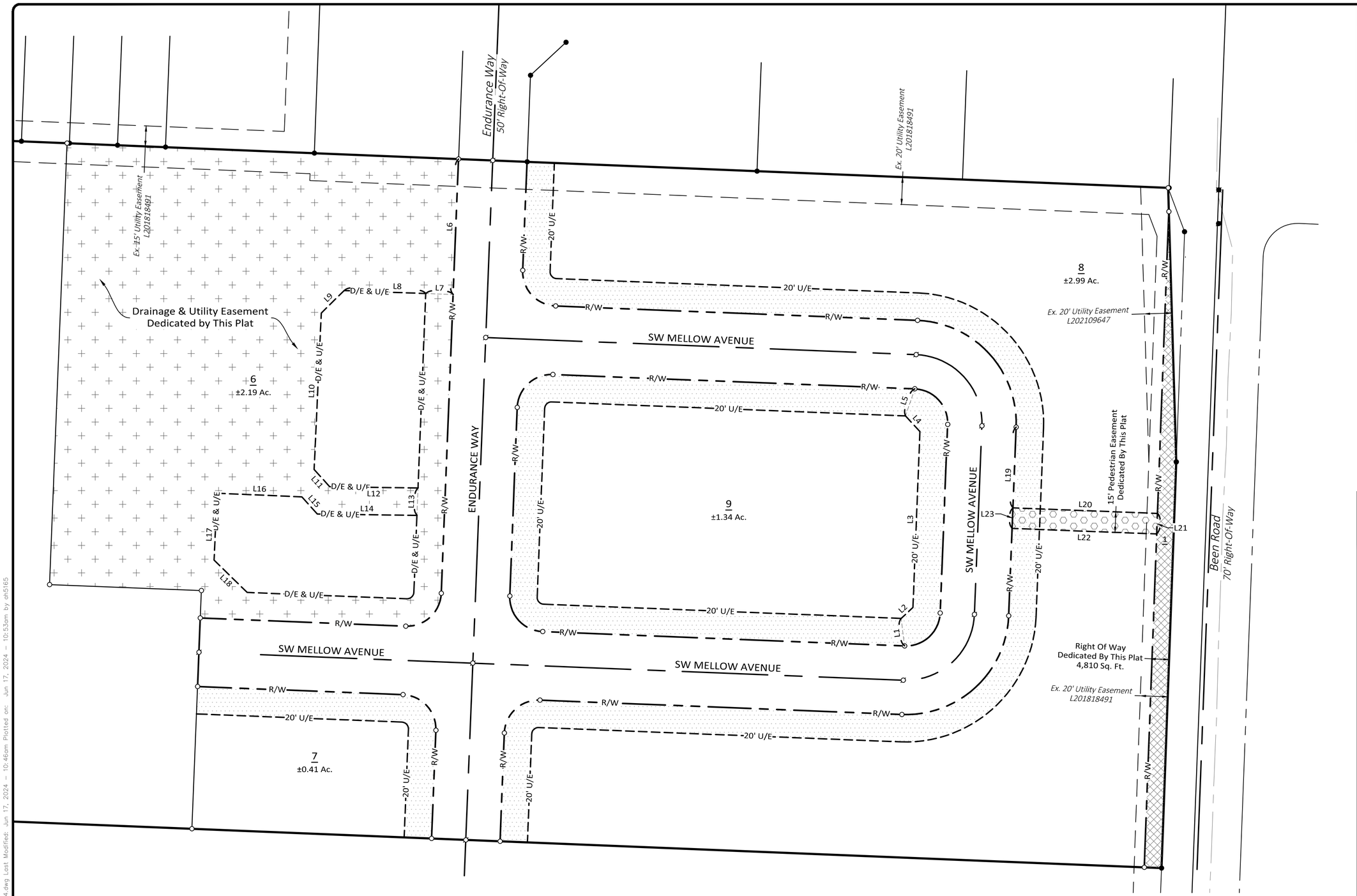

LEGEND

- Ex. Boundary Line
- Ex. Adjacent Boundary Line
- Lot Line
- R/W — Ex. Right of Way Line
- R/W — Dedicated Right of Way Line
- Ex. Road Centerline
- Road Centerline
- Ex. Easement Line
- Dedicated Easement Line
- Set 1/2" Rebar w/ PS# 1374 Cap
- Set Mag Nail w/ PS# 1374 Washer
- Ex. Rebar
- Ex. Nail
- Ex. Chiseled "X"
- Right-of-Way Dedicated By This Plat
- Utility & Drainage Easement Dedicated By This Plat
- Utility Easement Dedicated By This Plat
- Pedestrian Easement Dedicated By This Plat
- D/E — Drainage Easement
- U/E — Utility Easement

Easement Line Table		
Line #	Bearing	Length
L1	N 06°59'41" W	20.26'
L2	N 47°16'22" E	11.69'
L3	N 02°16'22" E	128.46'
L4	N 42°42'31" W	15.48'
L5	N 18°48'55" E	20.86'
L6	S 02°16'22" W	98.89'
L7	N 87°43'38" W	20.00'
L8	N 87°58'15" W	59.58'
L9	S 45°29'59" W	23.34'
L10	S 02°37'00" W	114.19'
L11	S 41°54'12" E	16.97'

Easement Line Table		
Line #	Bearing	Length
L12	S 89°13'27" E	64.45'
L13	S 02°16'22" W	20.01'
L14	N 89°13'27" W	72.69'
L15	N 41°54'12" W	16.82'
L16	N 87°33'09" W	61.94'
L17	S 02°32'06" W	48.81'
L18	S 45°36'17" E	33.74'
L19	S 02°16'22" W	70.07'
L20	S 87°48'40" E	105.52'
L21	S 02°08'45" W	15.00'
L22	N 87°48'40" W	105.56'

halff

HALFF ASSOCIATES, INC.
2407 SE COTTONWOOD ST. STE 1
BENTONVILLE, AR 72712
479.273.2209 - HALFF.COM

LOT SPLIT

Lot 3 of Featherston Valley Subdivision
Creating Lots 5, 6, 7, 8, and 9
Bentonville, Benton County, Arkansas

Prepared For:
NWA Multiplex Investors LLC

FEATHERSTON VALLEY SUBDIVISION

City of Bentonville Project Number: LS24-0016
Atlas Page: 442

Revisions

1	05.20.2024 Revised Lot Split Plans per City Comments
2	06.03.2024 Revised Lot Split Plans per City Comments
2	06.04.2024 Revised Right-Of-Way 1 & Lot 8

Drawn By:	JDS	Vert. Scale:	N/A
Approved By:	JSA	Horiz. Scale:	1" = 40'
Date:	04.18.2024	Plot Scale:	1
Project No.:	NWA-01 56524	DWG Name:	PLAT

SHEET **5** of 5

Drawing Name: A:\56000s\56524\001\SURV\CADD\Sheets\V-PLAN-LOT SPLIT-56524.dwg Last Modified: Jun 17, 2024 - 10:46am Plotted on: Jun 17, 2024 - 10:53am by ah5165

ORDINANCE NO._____

AN ORDINANCE ACCEPTING A LOT SPLIT OF LOT 3 OF FEATHERSTON VALLEY SUBDIVISION CREATING NEW LOTS 5, 6, 7, 8, AND 9 OF FEATHERSTON VALLEY SUBDIVISION TO THE CITY OF BENTONVILLE, ARKANSAS; AND FOR OTHER PURPOSES.

(PROJECT NUMBER: LS24-0016)

WHEREAS, pursuant to the provisions of the Land Development Code of the Bentonville Municipal Code, the lot split of LOT 3 OF FEATHERSTON VALLEY SUBDIVISION creating new LOTS 5, 6, 7, 8, AND 9 of FEATHERSTON VALLEY SUBDIVISION, Benton County, Arkansas, was submitted to the Bentonville Planning Commission on August 20, 2024;

WHEREAS, said lot split is attached hereto as Exhibit "A";

WHEREAS, the Bentonville Planning Commission considered said lot split on the date stated, and at other times, and voted to recommend the approval of said lot split to the City Council; and

WHEREAS, the lot split of real property as described herein has been submitted to the City Council of the City of Bentonville and, after consideration and deliberation, said Council is of the opinion that said lot split should be approved.

NOW, THEREFORE, BE IT ORDAINED BY THE CITY COUNCIL FOR THE CITY OF BENTONVILLE, ARKANSAS:

Section 1: That the lot split of LOT 3 OF FEATHERSTON VALLEY SUBDIVISION creating new LOTS 5, 6, 7, 8, AND 9 OF FEATHERSTON VALLEY SUBDIVISION to the City of Bentonville, Arkansas, should be and the same is hereby accepted and approved for all purposes;

Section 2: That the Mayor and City Clerk be and are hereby authorized and directed to evidence the acceptance of said lot split by certifying said acceptance on the approved lot split;

Section 3 - Severability Provision: If any part of this Ordinance is held invalid, the remainder of this Ordinance shall continue in effect as if such invalid portion never existed; and

Section 4 - Repeal of Conflicting Provisions: All Ordinances, Resolutions, or Orders of the City Council, or parts of the same, in conflict with this Ordinance are repealed to the extent of such conflict.

PASSED AND APPROVED this_____ day of _____, 2024.

APPROVED:

_____

ATTEST: **Stephanie Orman, Mayor**

_____

Malorie Marrs, City Clerk

Consent Agenda Item LS24-0023

For the Planning Commission meeting on August 27, 2024

Details

Property Line Adjustment: Lots 4, 5, and 6 of Pabst Addition, Pabst, Matthew Kane et al Trustees, 4229 Southwest Bright Road, R-1, Low-Density Residential, *LS24-0023*

A Property Line Adjustment of existing Lots 1, 2 and 3, creating new Lots 4, 5, and 6 of Pabst Addition. Per the requirements of the current Master Street Plan, the existing right-of-way is adequate along Southwest Cherry Road and Southwest Bright Road. the plat will dedicate an access easement to lots 5 and 6. the plat does not dedicate any new utility easements to serve the lots.

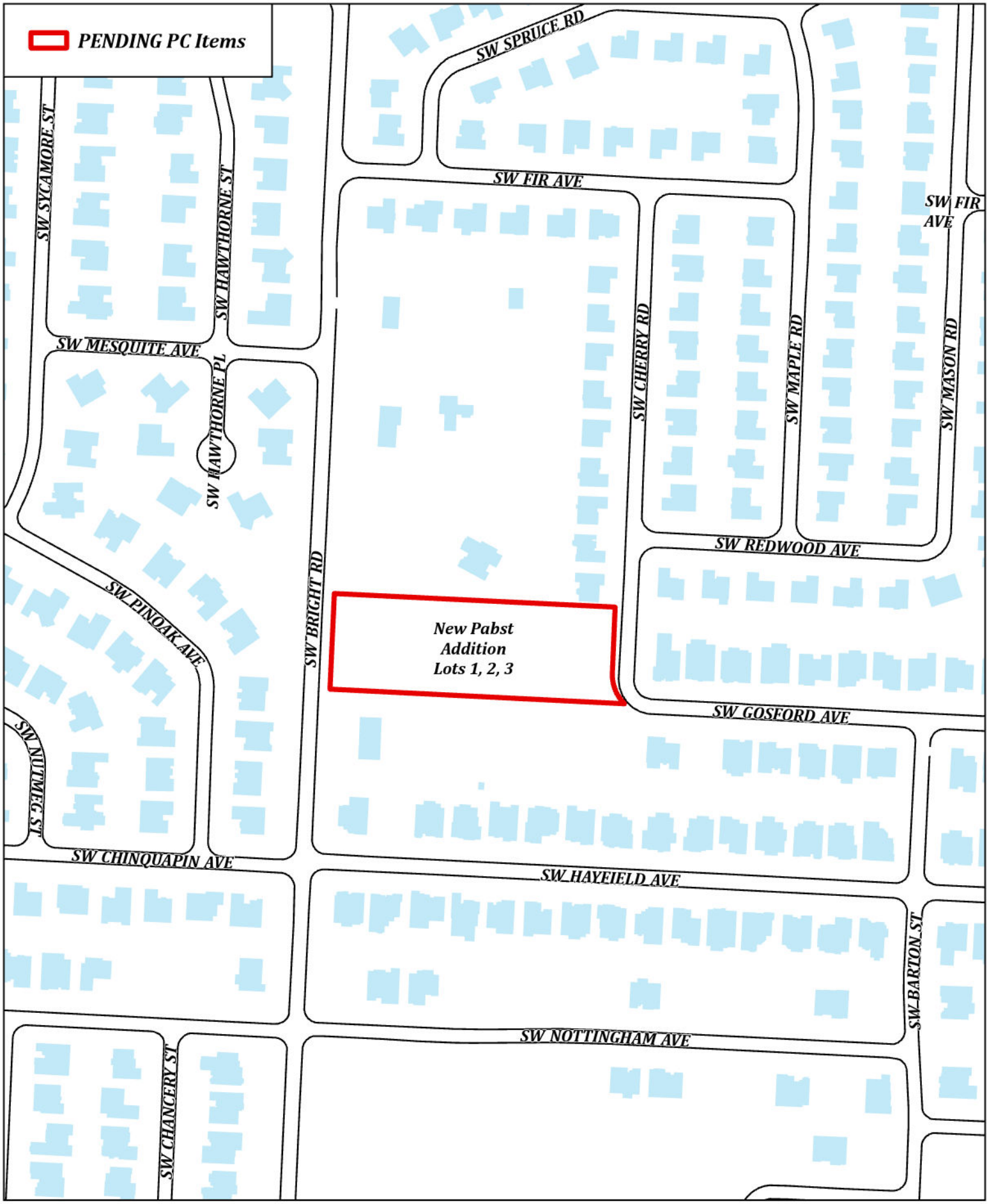

N
W E
S

LS24-0023
Creating Pabst Addition Lots 1, 2, & 3
Lot Split

THE CITY OF BENTONVILLE

PROPERTY LINE ADJUSTMENT OF EXISITNG LOTS 1, 2 AND 3 CREATING NEW LOTS 4, 5 AND 6 OF PABST ADDITION

LOCATED IN SECTION 12, TOWNSHIP 19 NORTH, RANGE 31 WEST
4229 SW BRIGHT RD, BENTONVILLE, AR 72712
BENTON COUNTY

MISCELLANEOUS NOTES

STATE RECORDING NUMBER:
500-19N-31W-0-12-140-04-1659

COMPLETED FIELD WORK:
JUNE 19, 2024

REFERENCE DOCUMENTS:
1. SURVEY PLAT FILED IN PLAT BOOK 2005 AT PAGE 763.
2. SURVEY PLAT FILED IN FILE NUMBER L202343488.

SOME FEATURES SHOWN ON THIS PLAT MAY BE SHOWN OUT OF SCALE FOR CLARITY.

DIMENSIONS ON THIS PLAT ARE EXPRESSED IN FEET AND DECIMAL PARTS THEREOF UNLESS OTHERWISE NOTED. MONUMENTS WERE FOUND AT POINTS WHERE INDICATED.

EXCEPT AS SPECIFICALLY STATED OR SHOWN ON THIS PLAT, THIS SURVEY DOES NOT PURPORT TO REFLECT OF ANY OF THE FOLLOWING WHICH MAY BE APPLICABLE TO THE SUBJECT PROPERTY: EASEMENTS, OTHER THAN POSSIBLE EASEMENTS WHICH WERE VISIBLE AT THE TIME OF SURVEY; RESTRICTIVE COVENANTS; SUBDIVISION RESTRICTIONS OR OTHER LAND USE REGULATIONS; AND ANY OTHER FACTS WHICH AN ACCURATE TITLE SEARCH MAY DISCLOSE.

APPROVAL OF THE PLAT DOES NOT CARRY ANY ASSURANCES THAT THE TRACT OR TRACTS WILL QUALIFY FOR A SEPTIC SYSTEM PERMIT FROM THE ARKANSAS HEALTH DEPARTMENT.

APPROVAL OF THIS PLAN DOES NOT IN ANY WAY INDICATE THAT ANY OF THE LOTS ON THIS PLAN ARE BUILDABLE ACCORDING TO THE PLANNING REGULATIONS OF BENTON COUNTY, ARKANSAS, NOR AN ENDORSEMENT BY THE PLANNING BOARD OF SAID BUILDABILITY OF SAID LOTS.

BEFORE ANY WORK IN THE RIGHT-OF-WAY COMMENCES, CONTRACTOR AND OR OWNER IS TO OBTAIN RIGHT-OF-WAY PERMIT FROM THE CITY OF BENTONVILLE TRANSPORTATION DEPARTMENT.

OWNER/DEVELOPER SHALL COORDINATE WITH ALL LOCAL UTILITIES TO ENSURE THAT EACH LOT HAS WATER, SEWER AND ELECTRIC SERVICE.

SIDEWALKS SHALL BE THE RESPONSIBILITY OF THE BUILDER/OWNER AT TIME OF BUILDING PERMIT ISSUANCE.

THERE MAY NOT BE FENCES OR ANY OTHER STRUCTURES BUILT IN ANY DRAINAGE EASEMENTS.

ALL STRUCTURES MUST MAINTAIN MINIMUM OF 20' CLEARANCES FROM ALL ELECTRIC LINES.

NO NEW ACCESS TO SOUTHWEST BRIGHT ROAD SHALL BE ALLOWED. ALL NEW ACCESS SHALL BE FROM SOUTHWEST CHERRY ROAD.

NO RESIDENTIAL LOT SHALL BE PERMITTED DIRECT ACCESS TO A COLLECTOR OR ARTERIAL STREET. ALL RESIDENTIAL SUBDIVISION DEVELOPMENT CONTIGUOUS TO A COLLECTOR OR ARTERIAL STREET SHALL ORIENT FRONTAGE TO A LOCAL STREET, AND BACK OF THE PROJECT, WITHOUT ACCESS TO THE SAID MAJOR STREETS.

THERE ARE NO WAIVERS, VARIANCES AND/OR CONDITIONAL USES AT THE TIME OF PREPARING THIS PLAT OR PLAN.

THE SUBJECT PROPERTY IS LOCATED IN AIRPORT ZONE C (3) OUTER SAFETY ZONE (OSZ).

VICINITY MAP

NOT TO SCALE

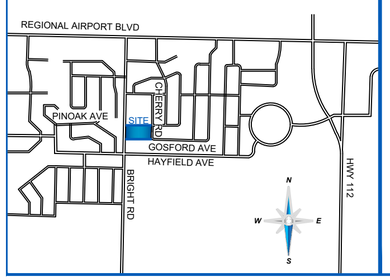

SURVEY DESCRIPTION

PARENT TRACT (PARCEL #01-07951-005 & 01-12535-001)
A PART OF THE SOUTH HALF OF THE SOUTHEAST QUARTER OF THE SOUTHWEST QUARTER OF SECTION 12, TOWNSHIP 19 NORTH, RANGE 31 WEST, AND ALSO BEING A PART OF LOT 174 OF OXFORD RIDGE SUBDIVISION, BENTON COUNTY, ARKANSAS, BEING MORE PARTICULARLY DESCRIBED AS FOLLOWS, TO-WIT:

BEGINNING AT A POINT WHICH IS S87°14'11"E 40.00' FROM THE NORTHWEST CORNER OF SAID SOUTH HALF OF THE SOUTHEAST QUARTER OF THE SOUTHWEST QUARTER, SAID POINT BEING A FOUND 5/8" REBAR STAMPED "AR 1659" ON THE EAST RIGHT-OF-WAY OF SOUTHWEST BRIGHT ROAD AND RUNNING THENCE ALONG THE NORTH LINE THEREOF S87°14'11"E 525.79' TO A FOUND CAPPED 5/8" REBAR STAMPED "AR 1659" ON THE WEST RIGHT-OF-WAY OF SOUTHWEST CHERRY ROAD, THENCE ALONG SAID RIGHT-OF-WAY THE FOLLOWING 2 COURSES: S02°26'41"W 121.68' TO A FOUND CAPPED 5/8" REBAR STAMPED "AR 1659", THENCE ALONG A CURVE TO THE LEFT WITH AN ARCH LENGTH OF 65.36', A RADIUS OF 75.93, WITH A CHORD BEARING AND DISTANCE OF S20°57'30"E 63.36' TO A FOUND CAPPED 5/8" REBAR STAMPED "AR 1659", THENCE LEAVING SAID RIGHT-OF-WAY AND RUNNING N87°09'09"W 551.49' TO A FOUND CAPPED 5/8" REBAR STAMPED "AR 1659" ON THE EAST RIGHT-OF-WAY OF SOUTHWEST BRIGHT ROAD, THENCE ALONG SAID RIGHT-OF-WAY N02°36'50"E 178.88' TO THE POINT OF BEGINNING. CONTAINING 94,737 SQ. FEET OR 2.175 ACRES, MORE OR LESS AND SUBJECT TO ALL EASEMENTS AND RIGHTS-OF-WAY OF RECORD.

LOT 4
A PART OF THE SOUTH HALF OF THE SOUTHEAST QUARTER OF THE SOUTHWEST QUARTER OF SECTION 12, TOWNSHIP 19 NORTH, RANGE 31 WEST, BENTON COUNTY, ARKANSAS, BEING MORE PARTICULARLY DESCRIBED AS FOLLOWS, TO-WIT:

BEGINNING AT A POINT WHICH IS S87°14'11"E 40.00' FROM THE NORTHWEST CORNER OF SAID SOUTH HALF OF THE SOUTHEAST QUARTER OF THE SOUTHWEST QUARTER, SAID POINT BEING A FOUND CAPPED 5/8" REBAR STAMPED "AR 1659" ON THE EAST RIGHT-OF-WAY LINE OF SOUTHWEST BRIGHT ROAD AND RUNNING THENCE ALONG THE NORTH LINE THEREOF S87°14'11"E 265.85 FEET TO A FOUND CAPPED 5/8" REBAR STAMPED "AR 1659"; THENCE LEAVING SAID NORTH LINE S02°26'41"W 73.75 FEET TO A FOUND CAPPED 5/8" REBAR STAMPED "AR 1659"; THENCE S87°14'11"E 126.16 FEET TO A FOUND CAPPED 5/8" REBAR STAMPED "AR 1659"; THENCE N02°26'41"E 53.75 FEET TO A FOUND CAPPED 5/8" REBAR STAMPED "AR 1659"; THENCE S87°14'11"E 133.79 FEET TO A FOUND CHISELED X LOCATED ON THE WESTERLY RIGHT-OF-WAY LINE OF SOUTHWEST CHERRY ROAD; THENCE ALONG SAID RIGHT-OF-WAY LINE S02°26'41"W 10.00 FEET TO A FOUND CAPPED 5/8" REBAR STAMPED "AR 1659"; THENCE LEAVING SAID RIGHT-OF-WAY LINE N87°14'10"W 96.75 FEET TO A SET CAPPED 5/8" REBAR STAMPED "PS 1926"; THENCE S32°42'40"W 73.47 FEET TO A SET CAPPED 5/8" REBAR STAMPED "PS 1926"; THENCE S02°26'41"W 85.79 FEET TO A FOUND CAPPED 5/8" REBAR STAMPED "AR 1659"; THENCE N87°09'09"W 392.54 FEET TO A FOUND CAPPED 5/8" REBAR STAMPED "AR 1659" LOCATED ON THE EASTERLY RIGHT-OF-WAY LINE OF SOUTHWEST BRIGHT ROAD; THENCE ALONG SAID RIGHT-OF-WAY LINE N02°36'50"E 178.88 FEET RETURNING TO THE POINT OF BEGINNING, CONTAINING 63,495 SQ. FEET OR 1.458 ACRES, MORE OR LESS AND SUBJECT TO ALL EASEMENTS AND RIGHTS-OF-WAY OF RECORD.

LOT 5
A PART OF THE SOUTH HALF OF THE SOUTHEAST QUARTER OF THE SOUTHWEST QUARTER OF SECTION 12, TOWNSHIP 19 NORTH, RANGE 31 WEST, AND ALSO BEING A PART OF LOT 174 OF OXFORD RIDGE SUBDIVISION, BENTON COUNTY, ARKANSAS, BEING MORE PARTICULARLY DESCRIBED AS FOLLOWS, TO-WIT:

COMMENCING FROM THE FROM THE NORTHWEST CORNER OF SAID SOUTH HALF OF THE SOUTHEAST QUARTER OF THE SOUTHWEST QUARTER, THENCE ALONG THE NORTH LINE THEREOF S87°14'11"E A DISTANCE OF 305.85' TO A FOUND CAPPED 5/8" REBAR STAMPED "AR 1659", MARKING THE TRUE POINT OF BEGINNING; THENCE CONTINUING S87°14'11"E A DISTANCE OF 259.94' TO A FOUND CAPPED 5/8" REBAR STAMPED "AR 1659" LOCATED ON THE WEST RIGHT-OF-WAY OF SOUTHWEST CHERRY ROAD; THENCE ALONG SAID RIGHT-OF-WAY S02°26'41"W A DISTANCE OF 20.00' TO A FOUND CAPPED 5/8" REBAR STAMPED "AR 1659"; THENCE LEAVING SAID RIGHT-OF-WAY N87°14'11"W A DISTANCE OF 133.79' TO A FOUND CAPPED 5/8" REBAR STAMPED "AR 1659"; THENCE S02°26'41"W A DISTANCE OF 53.75' TO A FOUND CAPPED 5/8" REBAR STAMPED "AR 1659"; THENCE N87°14'11"W A DISTANCE OF 126.16' TO A FOUND CAPPED 5/8" REBAR STAMPED "AR 1659"; THENCE N02°26'41"E A DISTANCE OF 73.75' RETURNING TO THE POINT OF BEGINNING, CONTAINING 11,979 SQ. FEET OR 0.275 ACRES, MORE OR LESS AND SUBJECT TO ALL EASEMENTS AND RIGHTS-OF-WAY OF RECORD.

LOT 6
A PART OF THE SOUTH HALF OF THE SOUTHEAST QUARTER OF THE SOUTHWEST QUARTER OF SECTION 12, TOWNSHIP 19 NORTH, RANGE 31 WEST, AND ALSO BEING A PART OF LOT 174 OF OXFORD RIDGE SUBDIVISION, BENTON COUNTY, ARKANSAS, BEING MORE PARTICULARLY DESCRIBED AS FOLLOWS, TO-WIT:

COMMENCING FROM THE FROM THE NORTHWEST CORNER OF SAID SOUTH HALF OF THE SOUTHEAST QUARTER OF THE SOUTHWEST QUARTER, THENCE ALONG THE NORTH LINE THEREOF S87°14'11"E A DISTANCE OF 565.79' TO A FOUND CAPPED 5/8" REBAR STAMPED "AR 1659" LOCATED ON THE WEST RIGHT-OF-WAY LINE OF SOUTHWEST CHERRY ROAD; THENCE ALONG SAID RIGHT-OF-WAY S02°26'41"W 30.00 FEET TO A FOUND CAPPED 5/8" REBAR STAMPED "AR 1659" MARKING THE TRUE POINT OF BEGINNING; THENCE CONTINUING ALONG SAID RIGHT-OF-WAY LINE S02°26'41"W 91.68 FEET TO A FOUND CHISELED X IN THE CONCRETE; THENCE WITH A CURVE TO THE LEFT WITH AN ARC LENGTH OF 65.36', A RADIUS OF 75.93', WITH A CHORD BEARING OF S20°57'30"E, WITH A CHORD LENGTH OF 63.36' TO A FOUND CHISELED X IN THE CONCRETE; THENCE LEAVING SAID RIGHT-OF-WAY LINE N87°09'09"W 158.95 FEET TO A FOUND CAPPED 5/8" REBAR STAMPED "AR 1659"; THENCE N02°26'41"E 85.79 FEET TO A SET CAPPED 5/8" REBAR STAMPED "PS 1926"; THENCE N32°42'40"E 73.47 FEET TO A SET CAPPED 5/8" REBAR STAMPED "PS 1926"; THENCE S87°14'10"E 96.75 FEET RETURNING TO THE POINT OF BEGINNING, CONTAINING 19,263 SQ. FEET OR 0.442 ACRES, MORE OR LESS AND SUBJECT TO ALL EASEMENTS AND RIGHTS-OF-WAY OF RECORD.

FLOOD ZONE INFORMATION

BY GRAPHIC PLOTTING ONLY, THIS PROPERTY IS IN ZONE "X" OF THE FLOOD INSURANCE RATE MAP, COMMUNITY PANEL NO. 05007C0255K, WHICH BEARS AN EFFECTIVE DATE OF 06/05/2012 AND IS NOT IN A SPECIAL FLOOD HAZARD AREA.

ZONE "X" - AREA OF MINIMAL FLOOD HAZARD, USUALLY DEPICTED ON FIRMS AS ABOVE THE 500-YEAR FLOOD LEVEL. ZONE X IS THE AREA DETERMINED TO BE OUTSIDE THE 500-YEAR FLOOD AND PROTECTED BY LEVEE FROM 100-YEAR FLOOD.

UTILITY INFORMATION

THE LOCATION OF UTILITIES SHOWN HEREON ARE FROM OBSERVED EVIDENCE OF ABOVE GROUND APPURTENANCES ONLY. THE SURVEYOR WAS NOT PROVIDED WITH UNDERGROUND PLANS OR SURFACE GROUND MARKINGS TO DETERMINE THE LOCATION OF ANY SUBTERRANEAN USES.

CERTIFICATE OF OWNER:

WE THE UNDERSIGNED, OWNERS OF THE REAL ESTATE SHOWN AND DESCRIBED HEREIN, DO HEREBY CERTIFY THAT WE HAVE LAID OFF, PLATTED, AND SUBDIVIDED AND DO HEREBY LAY OFF, PLAT, SUBDIVIDE SAID REAL ESTATE IN ACCORDANCE WITH THIS PLAT AND DO HEREBY DEDICATE TO THE USE OF THE PUBLIC THE STREETS, ALLEYS, DRIVES, EASEMENTS, ETC. AS SHOWN ON SAID PLAT.

DATE OF EXECUTION: _____

SIGNED:_____
NAME & ADDRESS

SOURCE OF TITLE: D.R. _____ PAGE _____

CERTIFICATE OF SURVEYING ACCURACY:

I, CLAYTON M. MCKELVIN, HEREBY CERTIFY THAT THIS PLAT CORRECTLY REPRESENTS A BOUNDARY SURVEY MADE BY ME AND BOUNDARY MARKERS AND LOT CORNERS SHOWN HEREON ACTUALLY EXIST AND THEIR LOCATION, TYPE AND MATERIAL ARE CORRECTLY SHOWN AND ALL MINIMUM REQUIREMENTS OF THE ARKANSAS MINIMUM STANDARDS FOR LAND SURVEYORS HAVE BEEN MET.

_____
DATE OF EXECUTION

_____
CLAYTON M. MCKELVIN
REGISTERED PROFESSIONAL LAND SURVEYOR
NO. AR 1926
STATE OF ARKANSAS

CERTIFICATE OF FINAL APPROVAL:

PURSUANT TO THE BENTONVILLE SUBDIVISION REGULATIONS AND ALL OTHER CONDITIONS AND APPROVAL HAVING BEEN COMPLETED, THIS DOCUMENT IS HEREBY ACCEPTED. THIS CERTIFICATE IS HEREBY EXECUTED UNDER THE AUTHORITY OF THE SAID RULES AND REGULATIONS.

DATE OF EXECUTION: _____

SIGNED:_____
BENTONVILLE PLANNING
COMMISSION CHAIRMAN

SIGNED:_____
MAYOR CITY OF BENTONVILLE

SIGNED:_____
CITY CLERK, CITY OF BENTONVILLE

OWNER/DEVELOPER

PABST REVOCABLE TRUST MATTHEW & STACIE
479-531-3905

ZONING INFORMATION

SETBACKS SHALL BE PER THE CURRENT ZONING DISTRICT AS STATED IN THE MOST RECENT CITY OF BENTONVILLE ZONING CODE. FOR MORE INFO VISIT WWW.BENTONVILLEPLANNING.COM OR CALL THE PLANNING DEPARTMENT @ 479-271-3122.

DATE	REVISION HISTORY	BY
07/18/24	PLANNING COMMENTS	BDM

LAND AREA

PARENT TRACT
PARCEL #01-07951-005 & #01-12535-001
94,737 SQ. FEET ±
2.175 ACRES ±

LOT 4
63,495 SQ. FEET ±
1.458 ACRES ±

LOT 5
11,979 SQ. FEET ±
0.275 ACRES ±

LOT 6
19,263 SQ. FEET ±
0.442 ACRES ±

I, CLAYTON M. MCKELVIN, PROFESSIONAL SURVEYOR NO. 1926, IN THE STATE OF ARKANSAS, HEREBY CERTIFY THIS TO BE TRUE AND CORRECT TO THE BEST OF MY KNOWLEDGE AND BELIEF ON THIS THE 24TH DAY OF JUNE, 2024.

CERTIFICATE OF AUTHORIZATION
BLEW & ASSOCIATES, PA
No. 1534
ARKANSAS

LICENSED PROFESSIONAL SURVEYOR
STATE OF ARKANSAS
No. 1926
SIGNATURE
CLAYTON M. MCKELVIN

IF THE SIGNATURE ON THIS SEAL IS NOT AN ORIGINAL AND NOT BLUE IN COLOR THEN IT SHOULD BE ASSUMED THAT THIS PLAT MAY HAVE BEEN ALTERED. THE ABOVE CERTIFICATION SHALL NOT APPLY TO ANY COPY THAT DOES NOT BEAR AN ORIGINAL SEAL AND SIGNATURE.

BLEW & ASSOCIATES, P.A.
Surveying
Engineering
Mapping
3825 N. SHILOH DRIVE - FAYETTEVILLE, AR 72703
EMAIL:SURVEY@BLEWINC.COM
OFFICE: 479.443.4506 FAX: 479.582.1883
WWW.BLEWINC.COM

SURVEYOR JOB NUMBER: 24-3756	**SURVEY DRAWN BY:** BDM - 06/24/2024
SURVEY REVIEWED BY: TPN	**SCALE:** N/A
FOR THE USE AND BENEFIT OF: MATT PABST	**CITY OF BENTONVILLE PROJECT NO:** LS24-0023

SHEET 1 OF 2

PROPERTY LINE ADJUSTMENT OF EXISITNG LOTS 1, 2 AND 3 CREATING NEW LOTS 4, 5 AND 6 OF PABST ADDITION

LOCATED IN SECTION 12, TOWNSHIP 19 NORTH, RANGE 31 WEST
4229 SW BRIGHT RD, BENTONVILLE, AR 72712
BENTON COUNTY

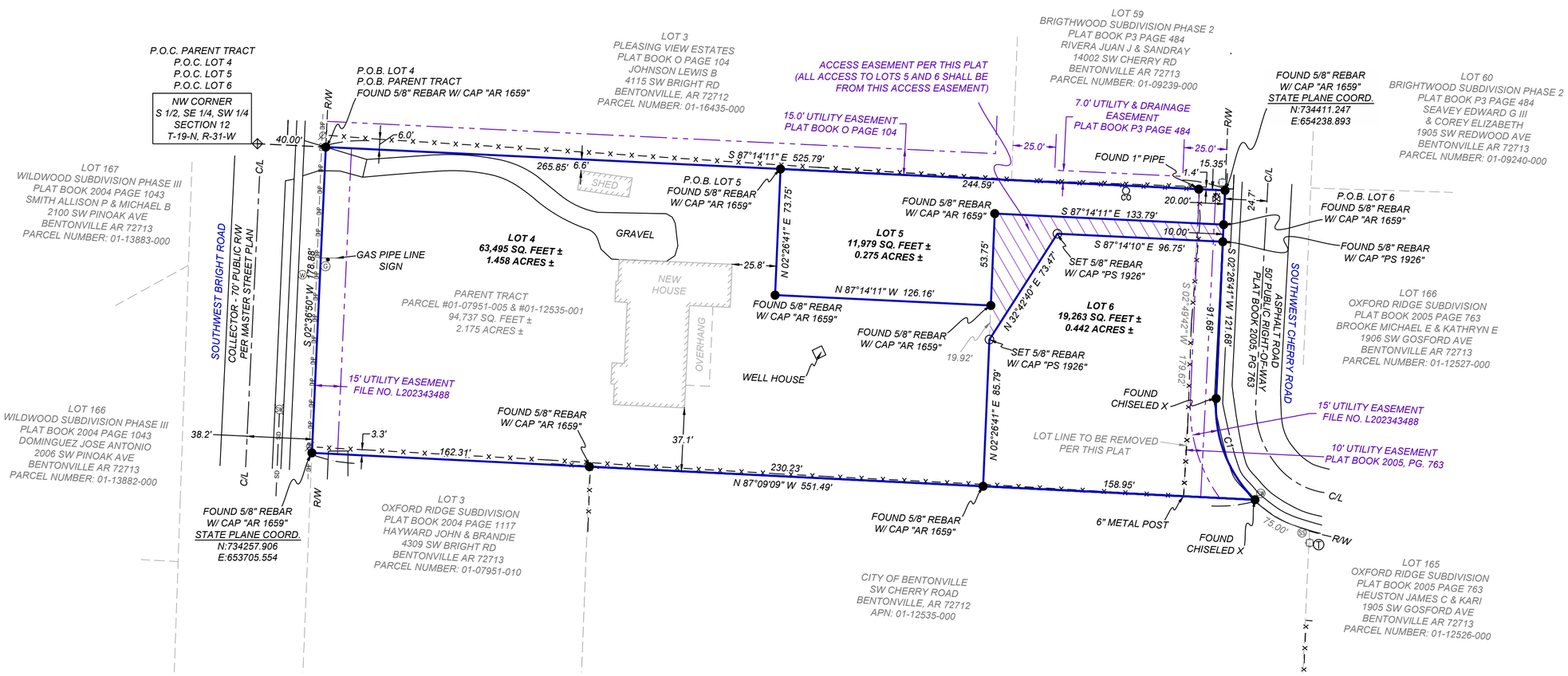

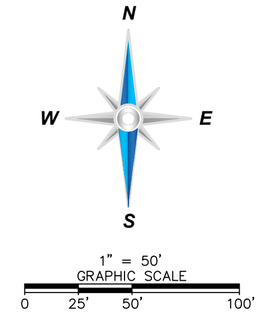

LEGEND & SYMBOLS

- FOUND MONUMENT (AS NOTED)
- SET MONUMENT (AS NOTED)
- COMPUTED POINT
- SANITARY SEWER
- STORM WATER
- GAS METER
- WATER METER
- CLEANOUT
- TELEPHONE MANHOLE
- ELECTRICAL BOX
- POWER POLE
- FIRE HYDRANT
- WATER VALVE
- R/W — RIGHT-OF-WAY
- C/L — CENTERLINE
- P.O.C. — POINT OF COMMENCEMENT
- P.O.B. — POINT OF BEGINNING
- BOUNDARY LINE
- EASEMENT LINE
- RIGHT-OF-WAY LINE
- CENTERLINE
- FENCE LINE
- STORM SEWER LINE
- OVERHEAD POWER LINE

CURVE TABLE

CURVE	RADIUS	ARC LENGTH	CHORD LENGTH	CHORD BEARING	DELTA ANGLE
C1	75.93'	65.36'	63.36'	S 20°57'30" E	49°19'07"

I, CLAYTON M. MCKELVIN, PROFESSIONAL SURVEYOR NO. 1926, IN THE STATE OF ARKANSAS, HEREBY CERTIFY THIS TO BE TRUE AND CORRECT TO THE BEST OF MY KNOWLEDGE AND BELIEF ON THIS THE 24TH DAY OF JUNE, 2024.

CERTIFICATE OF AUTHORIZATION — BLEW & ASSOCIATES, PA — No. 1534 — ARKANSAS

LICENSED PROFESSIONAL SURVEYOR — STATE OF ARKANSAS No. 1926 — SIGNATURE — CLAYTON M. MCKELVIN

IF THE SIGNATURE ON THIS SEAL IS NOT AN ORIGINAL AND NOT BLUE IN COLOR THEN IT SHOULD BE ASSUMED THAT THIS PLAT MAY HAVE BEEN ALTERED. THE ABOVE CERTIFICATION SHALL NOT APPLY TO ANY COPY THAT DOES NOT BEAR AN ORIGINAL SEAL AND SIGNATURE.

BLEW & ASSOCIATES, P.A.
Surveying
Engineering
Mapping
3825 N. SHILOH DRIVE - FAYETTEVILLE, AR 72703
EMAIL:SURVEY@BLEWINC.COM
OFFICE: 479.443.4506 FAX: 479.582.1883
WWW.BLEWINC.COM

SURVEYOR JOB NUMBER: 24-3756	**SURVEY DRAWN BY:** BDM - 06/24/2024
SURVEY REVIEWED BY: TPN	**SCALE:** 1" = 50'
FOR THE USE AND BENEFIT OF: MATT PABST	**CITY OF BENTONVILLE PROJECT NO:** LS24-0023

SHEET 2 OF 2

ORDINANCE NO. _____

AN ORDINANCE ACCEPTING A PROPERTY LINE ADJUSTMENT OF EXISTING LOTS 1, 2, AND 3 OF PABST ADDITION CREATING NEW LOTS 4, 5, AND 6 OF PABST ADDITION TO THE CITY OF BENTONVILLE, ARKANSAS; AND FOR OTHER PURPOSES.
(PROJECT NUMBER: LS24-0023)

WHEREAS, pursuant to the provisions of the Land Development Code of the Bentonville Municipal Code, the property line adjustment of EXISTING LOTS 1, 2, AND 3 OF PABST ADDITION creating new LOTS 4, 5, AND 6 OF PABST ADDITION the City of Bentonville, Benton County, Arkansas was submitted to the Bentonville Planning Commission on August 20, 2024;

WHEREAS, said property line adjustment is attached hereto as Exhibit "A";

WHEREAS, the Bentonville Planning Commission considered said property line adjustment on the date stated and at other times, and voted to recommend the approval of said property line adjustment to the City Council; and

WHEREAS, the property line adjustment of real property as described herein has been submitted to the City Council for the City of Bentonville, and after consideration and deliberation, said Council is of the opinion that said property line adjustment should be approved.

NOW, THEREFORE, BE IT ORDAINED BY THE CITY COUNCIL FOR THE CITY OF BENTONVILLE, ARKANSAS:

Section 1: That the property line adjustment of EXISTING LOTS 1, 2, AND 3 OF PABST ADDITION creating new LOTS 4, 5, AND 6 OF PABST ADDITION to the City of Bentonville, Arkansas, should be and the same is hereby accepted and approved for all purposes;

Section 2: That the Mayor and City Clerk be and are hereby authorized and directed to evidence the acceptance of said property line adjustment by certifying said acceptance on the approved property line adjustment;

Section 3 - Severability Provision: If any part of this Ordinance is held invalid, the remainder of this Ordinance shall continue in effect as if such invalid portion never existed; and

Section 4 - Repeal of Conflicting Provisions: All Ordinances, Resolutions, or Orders of the City Council, or parts of the same, in conflict with this Ordinance are repealed to the extent of such conflict.

PASSED AND APPROVED this_____ day of _____, 2024.

APPROVED:

_____
Stephanie Orman, Mayor

ATTEST:

_____
Malorie Marrs, City Clerk

Consent Agenda Item PLA24-0014

For the Planning Commission meeting on August 27, 2024

Details

Property Line Adjustment: Lots 1 and 2 of Hilldale Subdivision Creating Lots 4 and 5 of Hilldale Subdivision, Ginn Road and Southwest Anglin Road, R-1, Low Density Single Family Residential and R-2, Medium Density Two Family and Townhome Residential, *PLA24-0014*

This property is located on Ginn Road and Southwest Anglin Road. It is currently zoned R-1, Low Density Single Family Residential and R-2, Medium Density Two Family and Townhome Residential. Adjacent zoning includes R-1, Low Density Single Family Residential; R-2, Medium Density Two Family and Townhome Residential; and A-1, Agriculture. This applicant is proposing a Property Line Adjustment of Lots 1 and 2 of Hilldale Subdivision creating Lots 4 and 5 of Hilldale Subdivision.
This plat dedicates a total of 61,962 square feet of right-of-way area per the requirements of the Master Street Plan for Ginn Road and Southwest Anglin Road. Along Ginn Road, 49,383 square feet is dedicated on the northeast corner and the east side of the property. Along Southwest Anglin Road, 12,579 square feet of right-of-way is dedicated on the southwest corner of the property. The plat does not dedicate any new utility easements to serve the lots. The City of Centerton is servicing water and sewer utilities.

No waivers or variances are requested with this plat. However, a waiver was approved from Section 6.4 of the Drainage Manual requiring 1% slope for all streets for PP24-0003.

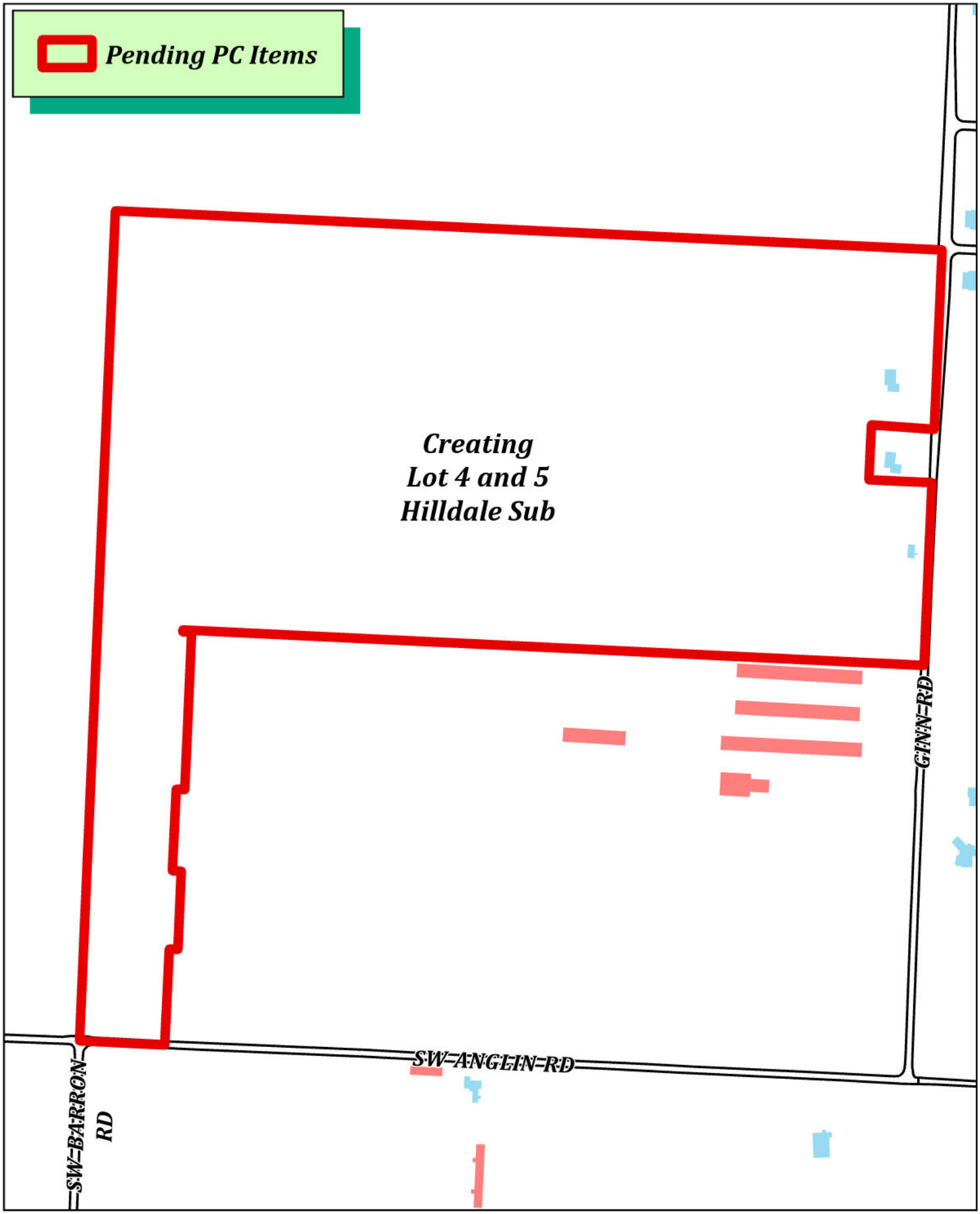

PLA24-0014
Creating Lot 4 and 5 Hilldale Sub
Ginn Rd and SW Anglin Rd

PREVIOUS LOT 1 (PARCEL 01-20262-000):

A PART OF THE NORTHEAST QUARTER OF THE SOUTHWEST QUARTER, A PART OF THE NORTHWEST QUARTER OF THE SOUTHWEST QUARTER AND A PART OF THE SOUTHWEST QUARTER OF THE SOUTHWEST QUARTER, ALL IN SECTION 9, TOWNSHIP 19 NORTH, RANGE 31 WEST, BENTON COUNTY, ARKANSAS, BEING MORE PARTICULARLY DESCRIBED AS FOLLOWS, TO-WIT: BEGINNING AT AN EXISTING MAG NAIL FOR THE NORTHEAST CORNER OF SAID NORTHEAST QUARTER OF THE SOUTHWEST QUARTER, AND RUNNING THENCE ALONG THE EAST LINE OF THE NORTHEAST QUARTER OF THE SOUTHWEST QUARTER SAID SECTION 9 SO2°29'49"W 277.82' TO A POINT, FROM WHICH A SET 1/2" REBAR BEARS N87°30'55"W 43.50', THENCE LEAVING SAID EAST LINE N87°30'55"W 298.62' TO A SET 1/2" REBAR, THENCE S02°29'05"W 27.54' TO A SET 1/2" REBAR, THENCE N87°15'34"W 246.01' TO A SET 1/2" REBAR, THENCE N02°29'05"E 28.68' TO A SET 1/2" REBAR, THENCE N87°30'55"W 254.01' TO A SET 1/2" REBAR, THENCE S02°29'05"W 27.54' TO A SET 1/2" REBAR, THENCE N87°15'34"W 517.83' TO A SET 1/2" REBAR, THENCE N02°29'05"E 28.68' TO A SET 1/2" REBAR, THENCE N87°30'55"W 254.01' TO A SET 1/2" REBAR, THENCE S02°29'05"W 27.54' TO A SET 1/2" REBAR,THENCE N87°15'34"W 508.02' TO A SET 1/2" REBAR, THENCE S02°29'05"W 762.03' TO A SET 1/2" REBAR, THENCE N87°15'34"W 281.33' TO A SET 1/2" REBAR, THENCE S02°44'26"W 259.75' TO A SET 1/2" REBAR, THENCE S87°15'34"E 28.48' TO A SET 1/2" REBAR, THENCE SO2°29'05"W 501.34' TO A SET 1/2" REBAR, THENCE N87°15'34"W 27.32' TO A SET 1/2" REBAR, THENCE S02°44'26"W 259.75' TO A SET 1/2" REBAR, THENCE S87°15'34"E 28.48' TO A SET 1/2" REBAR, THENCE S02°29'05"W 249.21' TO A SET 1/2" REBAR, THENCE N87°15'34"W 27.32' TO A SET 1/2" REBAR, THENCE S02°44'26"W 305.45' TO A POINT ON THE SOUTH LINE OF THE SOUTHWEST QUARTER OF THE SOUTHWEST QUARTER SAID SECTION 9, FROM WHICH A SET 1/2" REBAR BEARS N02°44'26"E 48.44', THENCE N87°13'45"W 271.24' TO AN EXISTING COTTON PICKER SPINDLE FOR THE SOUTHWEST CORNER OF SAID SECTION 9, THENCE N02'28'35"E 1321.35' TO AN EXISTING 1/2" REBAR FOR THE NORTHWEST CORNER OF THE SOUTHWEST QUARTER OF THE SOUTHWEST QUARTER OF SAID SECTION 9, THENCE N02°28'07"E 1321.39' TO A FOUND STONE FOR THE NORTHWEST CORNER OF THE NORTHWEST QUARTER OF THE SOUTHWEST QUARTER OF SAID SECTION 9, THENCE S87°17'19"E 1316.53" TO A FOUND 1/2" REBAR FOR THE NORTHEAST CORNER OF THE NORTHWEST QUARTER OF THE SOUTHWEST QUARTER OF SAID SECTION 9, THENCE S87°17'19"E 1316.53' TO THE POINT OF BEGINNING. CONTAINING 37.99 ACRES, MORE OR LESS. SUBJECT TO EASEMENTS AND RIGHTS-OF-WAY OF RECORD.

PREVIOUS LOT 2 (PARCEL 01-20263-000):

A PART OF THE NORTHEAST QUARTER OF THE SOUTHWEST QUARTER AND A PART OF THE NORTHWEST QUARTER OF THE SOUTHWEST QUARTER OF SECTION 9, TOWNSHIP 19 NORTH, RANGE 31 WEST, BENTON COUNTY, ARKANSAS, BEING MORE PARTICULARLY DESCRIBED AS FOLLOWS, TO-WIT: COMMENCING AT AN EXISTING MAG NAIL FOR THE NORTHEAST CORNER OF THE NORTHEAST QUARTER OF THE SOUTHWEST QUARTER OF SAID SECTION 9 AND RUNNING THENCE ALONG THE EAST LINE OF THE NORTHEAST QUARTER OF THE SOUTHWEST QUARTER S02°29'49"W 277.82' TO A POINT, FROM WHICH A SET 1/2" REBAR BEARS N87°30'55"W 43.50', THENCE CONTINUING ALONG SAID EAST LINE S02°29'49"W 293.33' TO AN EXISTING MAG NAIL, THENCE LEAVING SAID EAST LINE N85'53'30'W 200.36' TO AN EXISTING 1/2" REBAR, THENCE S02°42'07"W 175.12' TO AN EXISTING 1/2" REBAR, THENCE S87°25'58"E 200.91' TO AN EXISTING MAG NAIL ON THE EAST LINE OF THE NORTHEAST QUARTER OF THE SOUTHWEST QUARTER, THENCE ALONG SAID EAST LINE S02°29'49'W 581.87' TO AN EXISTING 1/2" REBAR FOR THE SOUTHEAST CORNER OF THE NORTHEAST QUARTER OF THE SOUTHWEST QUARTER, THENCE LEAVING SAID EAST LINE AND ALONG THE SOUTH LINE OF THE NORTH HALF OF THE SOUTHWEST QUARTER SAID SECTION 9 N87°15'34"W 2360.75' TO A SET 1/2" REBAR, THENCE N02°44'26"E 254.01' TO A SET 1/2" REBAR, THENCE S87°15'34"E 281.33' TO A SET 1/2" REBAR, THENCE N02°29'05"E 762.03' TO A SET 1/2" REBAR, THENCE S87°15'34"E 508.02' TO A SET 1/2" REBAR, THENCE N02°29'05"E 27.54' TO A SET 1/2" REBAR, THENCE S87°30'55"E 254.01' TO A SET 1/2" REBAR, THENCE S02°29'05"W 28.68' TO A SET 1/2" REBAR, THENCE S87°15'34"E 517.83' TO A SET 1/2" REBAR. THENCE N02°29'05"E 27.54' TO A SET 1/2" REBAR, THENCE S87°30'55"E 254.01' TO A SET 1/2" REBAR, THENCE S02°29'05"W 28.68' TO A SET 1/2" REBAR, THENCE S87°15'34"E 246.01' TO A SET 1/2" REBAR, THENCE N02°29'05"E 27.54' TO A SET 1/2" REBAR, THENCE S87°30'55"E 298.62' TO THE POINT OF BEGINNING. CONTAINING 49.85 ACRES, MORE OR LESS. SUBJECT TO EASEMENTS AND RIGHTS-OF-WAY OF RECORD

LOT 4:

A PART OF THE NORTHEAST QUARTER OF THE SOUTHWEST QUARTER AND A PART OF THE NORTHWEST QUARTER OF THE SOUTHWEST QUARTER OF SECTION 9, TOWNSHIP 19 NORTH, RANGE 31 WEST, BENTON COUNTY, ARKANSAS, BEING MORE PARTICULARLY DESCRIBED AS FOLLOWS, TO-WIT:

COMMENCING AT A MAG NAIL FOR THE NORTHEAST CORNER OF THE NORTHEAST QUARTER OF THE SOUTHWEST QUARTER OF SAID SECTION 9 AND RUNNING THENCE ALONG THE EAST LINE OF THE NORTHEAST QUARTER OF THE SOUTHWEST QUARTER S02°29'29"W 296.18' TO A 1/2" REBAR W/ PS 1374 CAP AND THE POINT OF BEGINNING; THENCE CONTINUING ALONG SAID EAST LINE S02°29'29"W 274.96' TO A MAG NAIL; THENCE LEAVING SAID EAST LINE N85°57'04'W 200.39' TO A 1/2" REBAR; THENCE S02°41'29"W 174.86' TO A 1/2" REBAR; THENCE S87°24'38"E 200.79' TO A MAG NAIL ON THE EAST LINE OF THE NORTHEAST QUARTER OF THE SOUTHWEST QUARTER; THENCE ALONG SAID EAST LINE S02°29'24'W 581.80' TO A MAG NAIL FOR THE SOUTHEAST CORNER OF THE NORTHEAST QUARTER OF THE SOUTHWEST QUARTER; THENCE LEAVING SAID EAST LINE AND ALONG THE SOUTH LINE OF THE NORTH HALF OF THE SOUTHWEST QUARTER OF SAID SECTION 9 N87°12'23"W 1322.07' TO A 1/2" REBAR; THENCE N87°19'34"W 1038.66' TO A 1/2" REBAR W/ 1873 CAP; THENCE N02°45'12"E 254.01' TO A 1/2" REBAR W/ 1873 CAP; THENCE S87°15'48"E 281.29' TO A 1/2" REBAR W/ 1873 CAP; THENCE N02°29'08"E 762.02' TO A 1/2" REBAR W/ 1873 CAP; THENCE S87°15'24"E 92.76' TO A 1/2" REBAR W/ PS 1374 CAP; THENCE N42°07'00"E 16.49' TO A 1/2" REBAR W/ PS 1374 CAP; THENCE N13°20'12"E 26.62' TO A 1/2" REBAR W/ PS 1374 CAP; THENCE N24°27'31"E 13.04' TO A 1/2" REBAR W/ PS 1374 CAP; THENCE N42°59'12"E 14.17' TO A 1/2" REBAR W/ PS 1374 CAP; THENCE N69°57'19"E 7.76' TO A 1/2" REBAR W/ PS 1374 CAP; THENCE N48°47'10"E 44.39' TO A 1/2" REBAR W/ PS 1374 CAP; THENCE S87°17'29"E 599.50' TO A 1/2" REBAR W/ PS 1374 CAP; THENCE S87°17'14"E 5.21' TO A 1/2" REBAR W/ PS 1374 CAP; THENCE S02°42'41"W 86.00' TO A 1/2" REBAR W/ PS 1374 CAP; THENCE S87°16'46"E 1312.48' TO A 1/2" REBAR W/ PS 1374 CAP TO THE POINT OF BEGINNING, CONTAINING 50.19 ACRES, MORE OR LESS. SUBJECT TO EASEMENTS AND RIGHTS-OF-WAY OF RECORD.

LOT 5:

A PART OF THE NORTHEAST QUARTER OF THE SOUTHWEST QUARTER, A PART OF THE NORTHWEST QUARTER OF THE SOUTHWEST QUARTER AND A PART OF THE SOUTHWEST QUARTER OF THE SOUTHWEST QUARTER, ALL IN SECTION 9, TOWNSHIP 19 NORTH, RANGE 31 WEST, BENTON COUNTY, ARKANSAS, BEING MORE PARTICULARLY DESCRIBED AS FOLLOWS, TO-WIT:

BEGINNING AT A MAG NAIL FOR THE NORTHEAST CORNER OF SAID NORTHEAST QUARTER OF THE SOUTHWEST QUARTER, AND RUNNING THENCE ALONG THE EAST LINE OF THE NORTHEAST QUARTER OF THE SOUTHWEST QUARTER OF SAID SECTION 9 S02°29'29"W 296.18' TO A 1/2" REBAR W/ PS 1374 CAP; THENCE LEAVING SAID EAST LINE N87°16'46"W 1312.48' TO A 1/2" REBAR W/ PS 1374 CAP; THENCE N02°42'41"E 86.00' TO A 1/2" REBAR W/ PS 1374 CAP; THENCE N87°17'14"W 5.21' TO A 1/2" REBAR W/ PS 1374 CAP; THENCE N87°17'29"W 599.50' TO A 1/2" REBAR W/ PS 1374 CAP; THENCE S48°47'10"W 44.39' TO A 1/2" REBAR W/ PS 1374 CAP; THENCE S69°57'19"W 7.76' TO A 1/2" REBAR W/ PS 1374 CAP; THENCE S42°59'12"W 14.17' TO A 1/2" REBAR W/ PS 1374 CAP; THENCE S24°27'31"W 13.04' TO A 1/2" REBAR W/ PS 1374 CAP; THENCE S13°20'12"W 26.62' TO A 1/2" REBAR W/ PS 1374 CAP; THENCE S42°07'00"W 16.49' TO A 1/2" REBAR W/ PS 1374 CAP; THENCE N87°15'24"W 92.76' TO A 1/2" REBAR W/ PS 1873 CAP; THENCE S02°29'08"W 762.02' TO A 1/2" REBAR W/ PS 1873 CAP; THENCE N87°15'48"W 281.29' TO A 1/2" REBAR W/ PS 1873 CAP; THENCE S02°45'12"W 259.69' TO A 1/2" REBAR W/ PS 1873 CAP; THENCE S87°12'55"E 28.47' TO A 1/2" REBAR W/ PS 1873 CAP; THENCE S02°28'50"W 501.34' TO A 1/2" REBAR W/ PS 1873 CAP; THENCE N87°12'36"W 27.37' TO A 1/2" REBAR W/ PS 1873 CAP; THENCE S02°44'11"W 259.73' TO A 1/2" REBAR W/ PS 1873 CAP; THENCE S87°10'03"E 28.49' TO A 1/2" REBAR W/ PS 1873 CAP; THENCE S02°28'25"W 249.15' TO A 1/2" REBAR W/ PS 1873 CAP; THENCE N87°20'19"W 27.40' TO A 1/2" REBAR W/ PS 1873 CAP; THENCE S02°44'05"W 305.52' TO A POINT ON THE SOUTH LINE OF THE SOUTHWEST QUARTER OF THE SOUTHWEST QUARTER SAID SECTION 9; THENCE N87°13'48"W 271.26' TO A COTTON PICKER SPINDLE FOR THE SOUTHWEST CORNER OF SAID SECTION 9; THENCE N02'28'38"E 1321.38' TO A 1/2" REBAR FOR THE NORTHWEST CORNER OF THE SOUTHWEST QUARTER OF THE SOUTHWEST QUARTER OF SAID SECTION 9; THENCE N02°27'52"E 1321.31' TO A FOUND STONE FOR THE NORTHWEST CORNER OF THE NORTHWEST QUARTER OF THE SOUTHWEST QUARTER OF SAID SECTION 9; THENCE S87°17'29"E 1316.58" TO A 1/2" REBAR FOR THE NORTHEAST CORNER OF THE NORTHWEST QUARTER OF THE SOUTHWEST QUARTER OF SAID SECTION 9; THENCE S87°17'14"E 1316.55' TO THE POINT OF BEGINNING. CONTAINING 36.20 ACRES, MORE OR LESS. SUBJECT TO EASEMENTS AND RIGHTS-OF-WAY OF RECORD.

VICINITY MAP

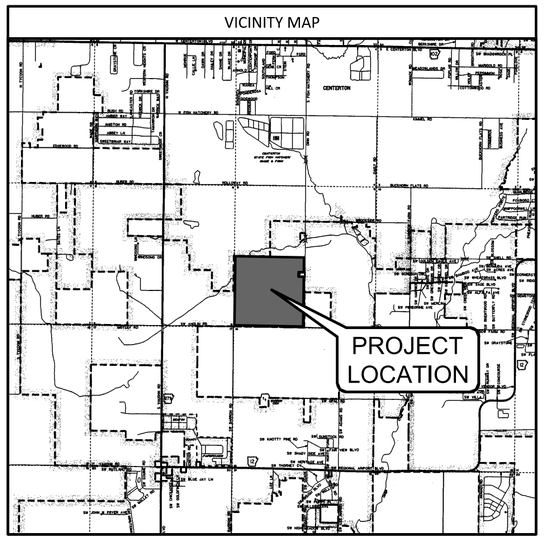

GENERAL NOTES:

- BASIS OF BEARINGS- GRID NORTH, ARKANSAS NORTH ZONE (0301) DERIVED FROM OPUS POST PROCESSED SOLUTION HAVING THE FOLLOWING VALUES: 36°08'39.1877" NORTH LATITUDE, 94°12'14.0707" WEST LONGITUDE, ELLIPSOID HEIGHT OF 1249.23, AND A COMBINED SCALE FACTOR OF 1.0000758921 (GRID TO GROUND).
- FLOOD INFORMATION – BASED ON GRAPHICAL REVIEW ONLY OF FIRM MAP NUMBER 05007C0235K, MAP REVISED JUNE 5, 2012, THE SUBJECT PROPERTY IS IN ZONE A AND ZONE X – AREAS DETERMINED TO BE OUTSIDE THE 0.2% ANNUAL CHANCE FLOODPLAIN.
- FLOOD INFORMATION (BLE) - BASED ON GRAPHICAL REPRESENTATION OF FEMA'S MOST RECENT BASE LEVEL ENGINEERING (BLE) STUDY FOR THE 1% ANNUAL CHANCE FLOOD FOR FEMA REGION 6.
- EVERY RECORDED DOCUMENT REVIEWED AND CONSIDERED AS A PART OF THIS SURVEY IS NOTED HEREON. SURVEYOR HAS NOT MADE A THOROUGH INVESTIGATION OR INDEPENDENT SEARCH FOR ANY EASEMENTS OR OTHER ENCUMBRANCES OR FACTS THAT AN ACCURATE, COMPLETE AND CURRENT TITLE SEARCH AND/OR TITLE COMMITMENT WOULD DISCLOSE. OTHER DOCUMENTS OF RECORD, RIGHTS, OR FACTS MAY EXIST AND AFFECT THIS PROPERTY. SURVEYORS NOTE: ONLY DOCUMENT REVIEWED IS THE LOT SPLIT, BOOK 17, PAGE 58.
- THERE ARE NO WAIVERS, VARIANCES AND/OR CONDITIONAL USES AT THE TIME OF PREPARING THIS PLAT OR PLAN.
- NO RESIDENTIAL LOT SHALL BE PERMITTED DIRECT ACCESS TO A COLLECTOR OR ARTERIAL STREET. ALL RESIDENTIAL SUBDIVISION DEVELOPMENT CONTIGUOUS TO A COLLECTOR OR ARTERIAL STREET SHALL ORIENT FRONTAGE TO A LOCAL STREET, AND BACK OF THE PROJECT, WITHOUT ACCESS TO THE SAID MAJOR STREETS.
- TOTAL DEDICATED RIGHT-OF-WAY AREA = ±61,962 SQ. FT.

CITY OF BENTONVILLE DEVELOPMENT NOTES:

- BEFORE ANY WORK IN THE STREET RIGHT-OF-WAY COMMENCES, CONTRACTOR AND/OR OWNER IS TO CONTACT THE CITY OF BENTONVILLE ENGINEERING AND TRANSPORTATION DEPARTMENTS AND NOTIFY SAID DEPARTMENTS OF THE INTENT AND TYPE OF WORK THAT WILL TAKE PLACE WITHIN THE RIGHT-OF-WAY.
- SETBACKS SHALL BE PER THE CURRENT ZONING DISTRICT AS STATED IN THE MOST RECENT CITY OF BENTONVILLE ZONING CODE. FOR MORE INFO VISIT WWW.BENTONVILLEPLANNING.COM OR CALL THE PLANNING DEPARTMENT @ 479-271-3122.
- CURRENT ZONING: R-1 (LOW DENSITY SINGLE FAMILY RESIDENTIAL), & R-2 (MEDIUM DENSITY TWO FAMILY & TOWNHOME)
- OWNER/DEVELOPER SHALL COORDINATE WITH ALL LOCAL UTILITIES TO ENSURE THAT EACH LOT HAS WATER, SEWER AND ELECTRIC SERVICE.
- SIDEWALKS SHALL BE THE RESPONSIBILITY OF THE BUILDER/OWNER AT TIME OF BUILDING PERMIT ISSUANCE.
- THERE MAY NOT BE FENCES OR ANY OTHER STRUCTURES BUILT IN ANY DRAINAGE EASEMENTS.

NATURAL GAS
BLACK HILLS ENERGY
CONTACT: JOSH KNIGHT
1301 FEDERAL WAY
PO BOX 2129
LOWELL, AR 72745
PHONE: (479) 333-7005
EMAIL: joshua.knight@blackhillscorp,com

TELEPHONE
AT&T
1133 E. HAROLD ST,
FAYETTEVILLE, AR 72701
CONTACT: BRENT BALDWIN
PHONE: (479) 200-9022
EMAIL: Bb1592@att.com
CONTACT: LAYNE RHODES
PHONE: (479) 442-1977
EMAIL: lr1592@att.com

CABLE TELEVISION
COX COMMUNICATIONS
4901 S, 48th STREET
SPRINGDALE, ARKANSAS 72762
CONTACTS: CHAD HODGE
PHONE: (479) 263-7057
EMAIL: chad.hodge@cox.com
TIMOTHY GOSS
PHONE: (479) 651-5583
EMAIL: timothy.goss@cox.com

FIRE DEPARTMENT
CITY OF BENTONVILLE
CONTACT: JUSTIN SCANTLIN (FIRE CHIEF)
800 SW "A" STREET
BENTONVILLE, ARKANSAS 72712
PHONE: (479) 271-5927

STREET DEPARTMENT
CITY OF BENTONVILLE
3200 S.W. MUNICIPAL DRIVE
BENTONVILLE, ARKANSAS 72712
CONTACT: TONY DAVIS
PHONE: (479) 271-3130

WATER DEPARTMENT
CITY OF BENTONVILLE
3200 S.W. MUNICIPAL DRIVE
BENTONVILLE, ARKANSAS 72712
CONTACT: BEAU THOMPSON
PHONE: (479) 271-3140

ELECTRIC DEPARTMENT
CITY OF BENTONVILLE
3200 S.W. MUNICIPAL DRIVE
BENTONVILLE, ARKANSAS 72712
CONTACT: CHARLIE BARNES
PHONE: (479) 271-3159

WASTEWATER DEPARTMENT
CITY OF BENTONVILLE
1901 NE A STREET
BENTONVILLE, ARKANSAS 72712
CONTACT: CHRIS EARL
PHONE: (479) 271-3161

PLANNING DEPARTMENT
CITY OF BENTONVILLE
305 S.W. A STREET
BENTONVILLE, ARKANSAS 72712
CONTACT: TYLER OVERSTREET
PHONE: (479) 271-3122

BUILDING & FIRE SAFETY DEPARTMENT
CITY OF BENTONVILLE
305 S.W. A STREET
BENTONVILLE, ARKANSAS 72712
CONTACT: BRAD ARNOLD
PHONE: (479) 271-3108

CITY ENGINEER
CITY OF BENTONVILLE
3200 S.W. MUNICIPAL DRIVE
BENTONVILLE, ARKANSAS 72712
CONTACT: ELLEN NORVELL
PHONE: (479) 271-5993

STORMWATER DEPARTMENT
CITY OF BENTONVILLE
3200 S.W. MUNICIPAL DRIVE
BENTONVILLE, ARKANSAS 72712
CONTACT: ALISON WEST
PHONE: (479) 271-6719

ARKANSAS PLAT CODE: 500-19N-31W-0-09-300-04-1374

CERTIFICATE OF OWNERSHIP:

WE THE UNDERSIGNED, OWNERS OF THE REAL ESTATE SHOWN AND DESCRIBED HEREIN, DO HEREBY CERTIFY THAT WE HAVE LAID OFF, PLAT, SUBDIVIDE SAID REAL ESTATE IN ACCORDANCE WITH THIS PLAT AND DO HEREBY DEDICATE TO THE USE OF THE PUBLIC THE STREETS, ALLEYS, DRIVES, EASEMENTS, ETC. AS SHOWN ON SAID PLAT.

DATE OF EXECUTION: _____

SIGNED: _____
BAPUJI VAKKALAGADDA

NAME & ADDRESS: _____

PRINT NAME: _____

SOURCE OF TITLE: D.R. _____

PAGE_____

STATE OF _____ }
} SS
COUNTY OF _____ }

SWORN AND SUBSCRIBED BEFORE ME THIS DAY _____ OF _____, 2024.

NOTARY PUBLIC: _____

MY COMMISSION EXPIRES: _____

CERTIFICATE OF APPROVAL:

PURSUANT TO THE BENTONVILLE LAND DEVELOPMENT CODE AND ALL OTHER CONDITIONS AND APPROVAL HAVING BEEN COMPLETED, THIS DOCUMENT IS HEREBY ACCEPTED. THIS CERTIFICATE IS HEREBY EXECUTED UNDER THE AUTHORITY OF THE SAID RULES AND REGULATIONS.

DATE OF EXECUTION: _____

SIGNED _____
BENTONVILLE PLANNING COMMISSION CHAIRPERSON

SIGNED _____
CITY CLERK, CITY OF BENTONVILLE

SIGNED _____
MAYOR, CITY OF BENTONVILLE

CERTIFICATE OF SURVEYING ACCURACY:

I, JAMES S. AUNSPAUGH, HEREBY CERTIFY THAT THIS PLAT CORRECTLY REPRESENTS A BOUNDARY SURVEY MADE BY ME OR UNDER MY DIRECT SUPERVISION AND BOUNDARY MARKERS AND LOT CORNERS SHOWN HEREON ACTUALLY EXIST AND THEIR LOCATION, TYPE AND MATERIAL ARE CORRECTLY SHOWN AND ALL REQUIREMENTS OF THE ARKANSAS STANDARDS OF PRACTICE FOR PROPERTY BOUNDARY SURVEYS AND PLATS HAVE BEEN MET.

DATE OF EXECUTION: JULY 25, 2024

CERTIFICATE OF AUTHORIZATION
HALFF ASSOCIATES, INC.
No. 1470
ARKANSAS

LICENSED PROFESSIONAL SURVEYOR
STATE OF ARKANSAS
No. 1374
SIGNATURE
JAMES S. AUNSPAUGH
07/25/24

SIGNED: _____
JAMES S. AUNSPAUGH,
ARKANSAS PS #1374

Filing Block

OWNER / DEVELOPER
SKYLIGHT HOMES, LLC
1801 SW REGIONAL AIRPORT BLVD. SUITE 5
BENTONVILLE, AR 72713
CONTACT: BAPUJI VAKKALAGADDA
TELEPHONE: (479) 366-6166

SURVEYOR
HALFF
2407 SE COTTONWOOD ST.
BENTONVILLE, AR 72712
CONTACT: JAMES S. AUNSPAUGH, PS
TELEPHONE: (479) 273-2209

halff

HALFF ASSOCIATES, INC.
2407 SE COTTONWOOD ST. STE 1
BENTONVILLE, AR 72712
479.273.2209 - HALFF.COM

PROPERTY LINE ADJUSTMENT

Bentonville, Arkansas

City of Bentonville Project #: PLA24-0014

Prepared For: BAPUJI VAKKALAGADDA

Property Line Adjustment of lots 1 & 2 Hilldale Subdivision Creating Lot's 4 & 5 Hilldale Subdivision

Revisions

1	07.02.2024	Revised Per City Comments
2	07.24.2024	Revised Airport Overlay District Hatch
3	07.25.2024	Revised Adjacent Owner Information

Drawn By:	JDS	Vert. Scale:	N/A
Approved By:	JSA	Horiz. Scale:	
Date:	05.22.2024	Plot Scale:	1
Project No.:	55275.001	DWG Name:	PLAT

SHEET 1 of 5

Drawing Name: A:\55000s\55275\001\SUR\CADD\Sheets\V-PLAN-PLAT-55275.001.dwg Last Modified: Jul 24, 2024 - 1:55pm Plotted on: Jul 25, 2024 - 8:55am by ar51615

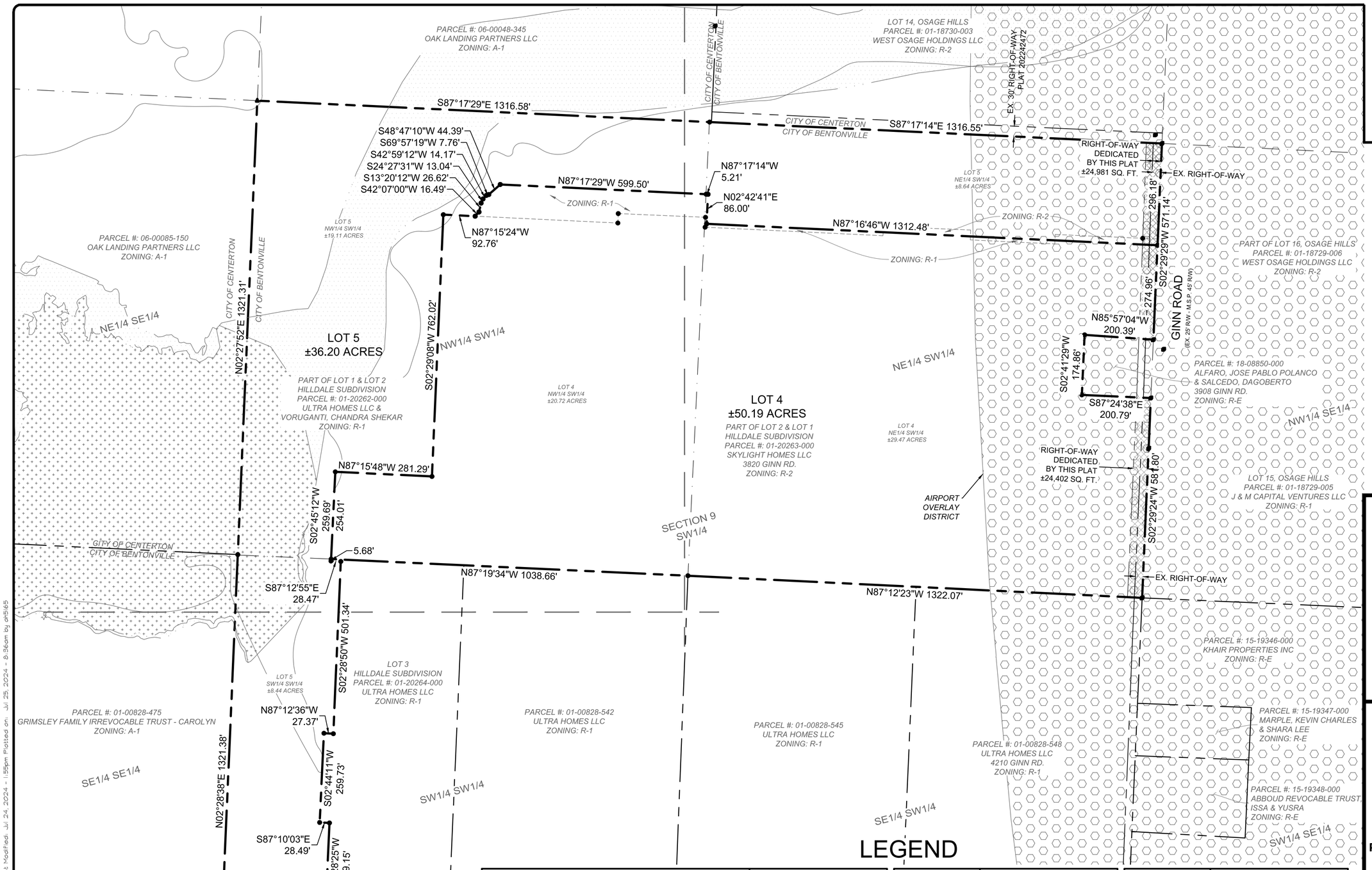

Filing Block

Grid North

200 0 200

Scale in Feet
1 Inch = 200 Feet

LICENSED PROFESSIONAL SURVEYOR
STATE OF ARKANSAS
NO. 1374
SIGNATURE
JAMES S. AUNSPACH
07/25/24

LEGEND

	BOUNDARY LINE
	ADJACENT BOUNDARY LINE
R/W	RIGHT-OF-WAY LINE
	EASEMENT LINE
C/L	ROAD CENTERLINE
	SECTION LINE
X	BARBWIRE FENCE LINE

	SET REBAR W/ PS# 1374 CAP
	SET NAIL W/ PS# 1374 WASHER
	REBAR / IRON PIPE, AS NOTED
	MONUMENT, AS NOTED
	RAILROAD SPIKE
FP	FENCE POST
FCP	FENCE CORNER POST
FGP	FENCE GATE POST
SSMH	SANITARY SEWER MANHOLE
SSCO	SANITARY SEWER CLEAN-OUT
TREE	TREE
STMH	STORM SEWER MANHOLE
PP	POWER POLE
GW	GUY WIRE
LP	LIGHT POLE

TPED	TELEPHONE PEDESTAL
TRIS	TELEPHONE RISER
FH	FIRE HYDRANT
WV	WATER VAVLE
WM	WATER METER
FSV	FIRE SPRINKLER VALVE
GM	GAS METER
SGN	SIGN
HCS	ACCESSIBLE PARKING SPACE SIGN
BOL	BOLLARD
ICV	IRRIGATION CONTROL VALVE
AC	AIR CONDITIONER
MB	MAIL BOX
P.O.B.	POINT OF BEGINNING
P.O.C.	POINT OF COMMENCEMENT

FLOOD - ZONE A

FLOOD - ZONE AE

DEDICATED RIGHT-OF-WAY BY THIS PLAT

AIRPORT OVERLAY DISTRICT

halff

HALFF ASSOCIATES, INC.
2407 SE COTTONWOOD ST. STE 1
BENTONVILLE, AR 72712
479.273.2209 - HALFF.COM

PROPERTY LINE ADJUSTMENT

Bentonville, Arkansas

City of Bentonville Project #: PLA24-0014

Prepared For: BAPUJI VAKKALAGADDA

Property Line Adjustment of lots 1 & 2 Hilldale Subdivision Creating Lot's 4 & 5 Hilldale Subdivision

Revisions

1	07.02.2024 - Revised Per City Comments
2	07.24.2024 - Revised Airport Overlay District Hatch
3	07.25.2024 - Revised Adjacent Owner Information

Drawn By:	JDS	Vert. Scale:	N/A
Approved By:	JSA	Horiz. Scale:	1" = 200'
Date:	05.22.2024	Plot Scale:	1
Project No.:	55275.001	DWG Name:	PLAT

SHEET 2 of 5

Drawing Name: A:\55000s\55275\00\1\SUR\CADD\Sheets\V-PLAN-PLAT-55275.001.dwg Last Modified: Jul 24, 2024 - 1:55pm Plotted on: Jul 25, 2024 - 8:36am by ar5165

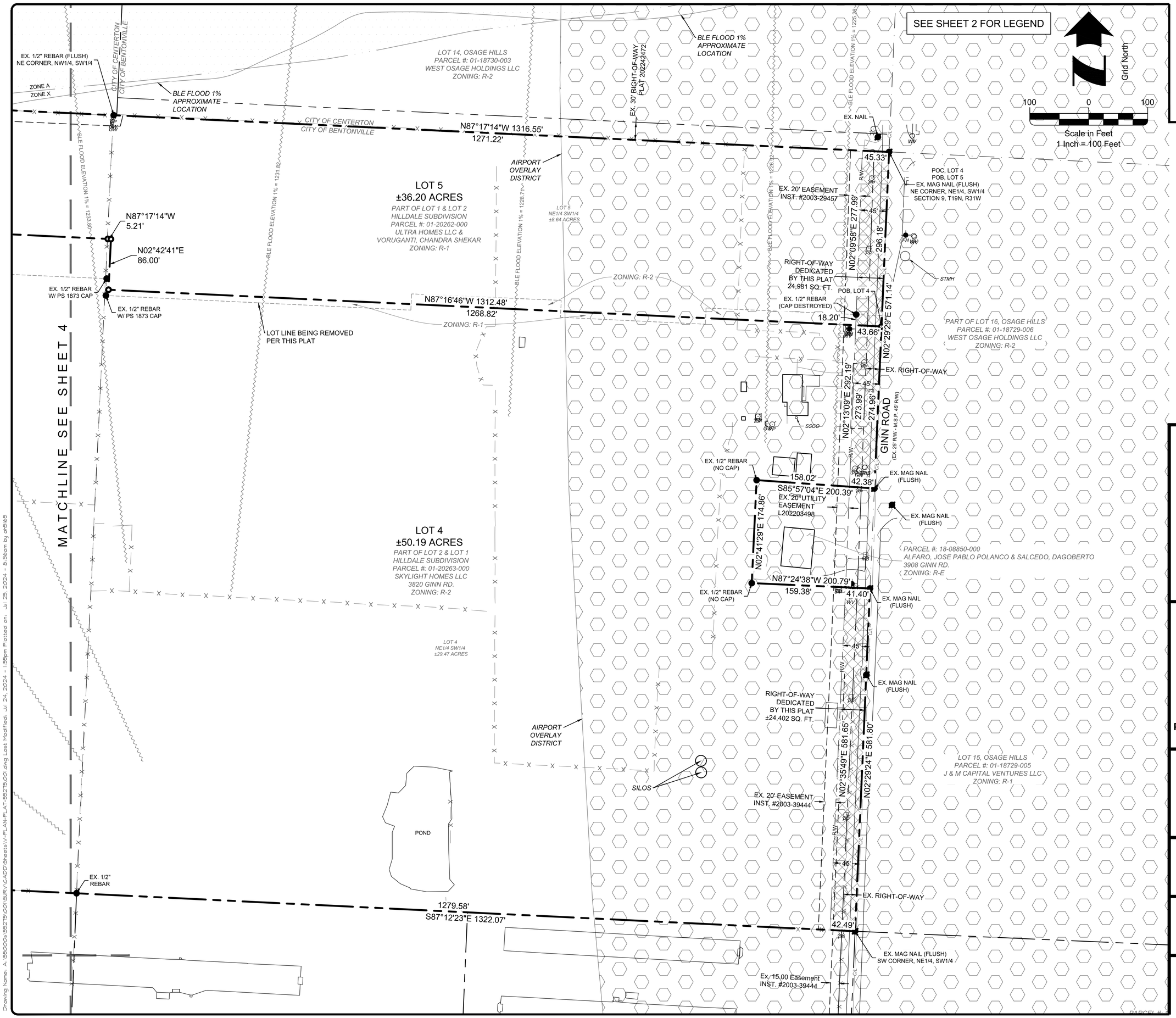

Filing Block

KEY MAP

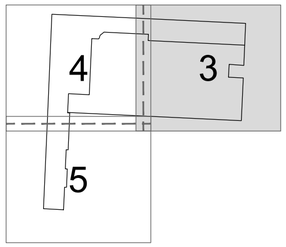

LICENSED PROFESSIONAL SURVEYOR
STATE OF ARKANSAS
NO. 1374
SIGNATURE
JAMES S. AUNSPAUGH
07/25/24

halff

HALFF ASSOCIATES, INC.
2407 SE COTTONWOOD ST. STE 1
BENTONVILLE, AR 72712
479.273.2209 - HALFF.COM

PROPERTY LINE ADJUSTMENT

Bentonville, Arkansas

City of Bentonville Project #: PLA24-0014

Prepared For: BAPUJI VAKKALAGADDA

Property Line Adjustment of lots 1 & 2 Hilldale Subdivision Creating Lot's 4 & 5 Hilldale Subdivision

Revisions

1 07.02.2024 - Revised Per City Comments
2 07.24.2024 - Revised Airport Overlay District Hatch
3 07.25.2024 - Revised Adjacent Owner Information

Drawn By:	JDS	Vert. Scale:	N/A
Approved By:	JSA	Horiz. Scale:	1" = 100'
Date:	05.22.2024	Plot Scale:	1
Project No.:	55275.001	DWG Name:	PLAT

SHEET **3** of 5

Drawing Name: A:\55000s\55275\001\SURV\CADD\Sheets\V-PLAN-PLAT-55275.001.dwg Last Modified: Jul 24, 2024 - 1:55pm Plotted on: Jul 25, 2024 - 8:56am by arsiles

SEE SHEET 2 FOR LEGEND

Grid North

100 0 100

Scale in Feet
1 Inch = 100 Feet

BLE FLOOD 1% APPROXIMATE LOCATION

EX. MONUMENT (CENTER OF STONE) NW CORNER, NW1/4, SW1/4

EX. 18.5' EASEMENT INST. # 02066403

PARCEL #: 06-00048-345
OAK LANDING PARTNERS LLC
ZONING: A-1

EX. 15' EASEMENT INST. # L201904860

EX. 1/2" REBAR (FLUSH) NE CORNER, NW1/4, SW1/4

ZONE A
ZONE X

CITY OF CENTERTON
CITY OF BENTONVILLE

N87°17'29"W 1316.58'

S48°47'10"W 44.39'
S69°57'19"W 7.76'
S42°59'12"W 14.17'
S24°27'31"W 13.04'
S13°20'12"W 26.62'
S42°07'00"W 16.49'

N87°17'29"W 599.50'

ZONING: R-1

EX. 1/2" REBAR W/ PS 1873 CAP

N87°15'24"W 92.76'

LOT LINE BEING REMOVED PER THIS PLAT

EX. 18' EASEMENT INST. # 02066403

LOT 5
NW1/4 SW1/4
±19.11 ACRES

PARCEL #: 06-00085-150
OAK LANDING PARTNERS LLC
ZONING: A-1

EX. 15' EASEMENT INST. # L201904860

S02°27'52"W 1321.31'

LOT 5
±36.20 ACRES
PART OF LOT 1 & LOT 2
HILLDALE SUBDIVISION
PARCEL #: 01-20262-000
ULTRA HOMES LLC &
VORUGANTI, CHANDRA SHEKAR
ZONING: R-1

S02°29'08"W 762.02'

LOT 4
NW1/4 SW1/4
±20.72 ACRES

LOT 4
±50.19 ACRES
PART OF LOT 2 & LOT 1
HILLDALE SUBDIVISION
PARCEL #: 01-20263-000
SKYLIGHT HOMES LLC
3820 GINN RD.
ZONING: R-2

BLE FLOOD ELEVATION 1% = 1237.58'
BLE FLOOD ELEVATION 1% = 1236.70'
BLE FLOOD ELEVATION 1% = 1233.80'
BLE FLOOD ELEVATION 1% = 1238.32'
BLE FLOOD ELEVATION 1% = 1239.92'
BLE FLOOD ELEVATION 1% = 1241.06'
BLE FLOOD ELEVATION 1% = 1242.45'
BLE FLOOD ELEVATION 1% = 1243.85'
BFE = 1241.1'
BFE = 1242.5'
BFE = 1244.6'

ZONE A
ZONE X

N87°15'48"W 281.29'

S02°45'12"W 259.69'
254.01'

CONC. PAD

5.68'

N87°12'55"W
28.47'

S87°19'34"E 1038.66'

EX. 1/2" REBAR (FLUSH) NW CORNER, SW1/4, SW1/4

POND

MATCHLINE SEE SHEET 5

E 501.34'

MATCHLINE SEE SHEET 3

Filing Block

KEY MAP

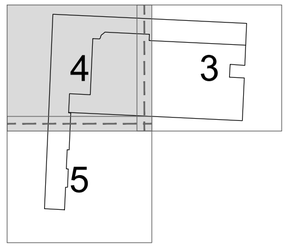

PROFESSIONAL LICENSED SURVEYOR
STATE OF ARKANSAS
NO. 137
SIGNATURE
JAMES S. AUNSPAUGH
07/25/24

halff

HALFF ASSOCIATES, INC.
2407 SE COTTONWOOD ST. STE 1
BENTONVILLE, AR 72712
479.273.2209 - HALFF.COM

PROPERTY LINE ADJUSTMENT

Bentonville, Arkansas

City of Bentonville Project #: PLA24-0014

Prepared For: BAPUJI VAKKALAGADDA

Property Line Adjustment of lots 1 & 2 Hilldale Subdivision Creating Lot's 4 & 5 Hilldale Subdivision

Revisions

1	07.02.2024 - Revised Per City Comments
2	07.24.2024 - Revised Airport Overlay District Hatch
3	07.25.2024 - Revised Adjacent Owner Information

Drawn By:	JDS	Vert. Scale:	N/A
Approved By:	JSA	Horiz. Scale:	1" = 100'
Date:	05.22.2024	Plot Scale:	1
Project No.:	55275.001	DWG Name:	PLAT

SHEET 4 of 5

Drawing Name: A:\55000s\55275\001\SURV\CADD\Sheets\V-PLAN-PLAT-55275.001.dwg Last Modified: Jul 24, 2024 - 1:55pm Plotted on: Jul 25, 2024 - 8:36am by arb165

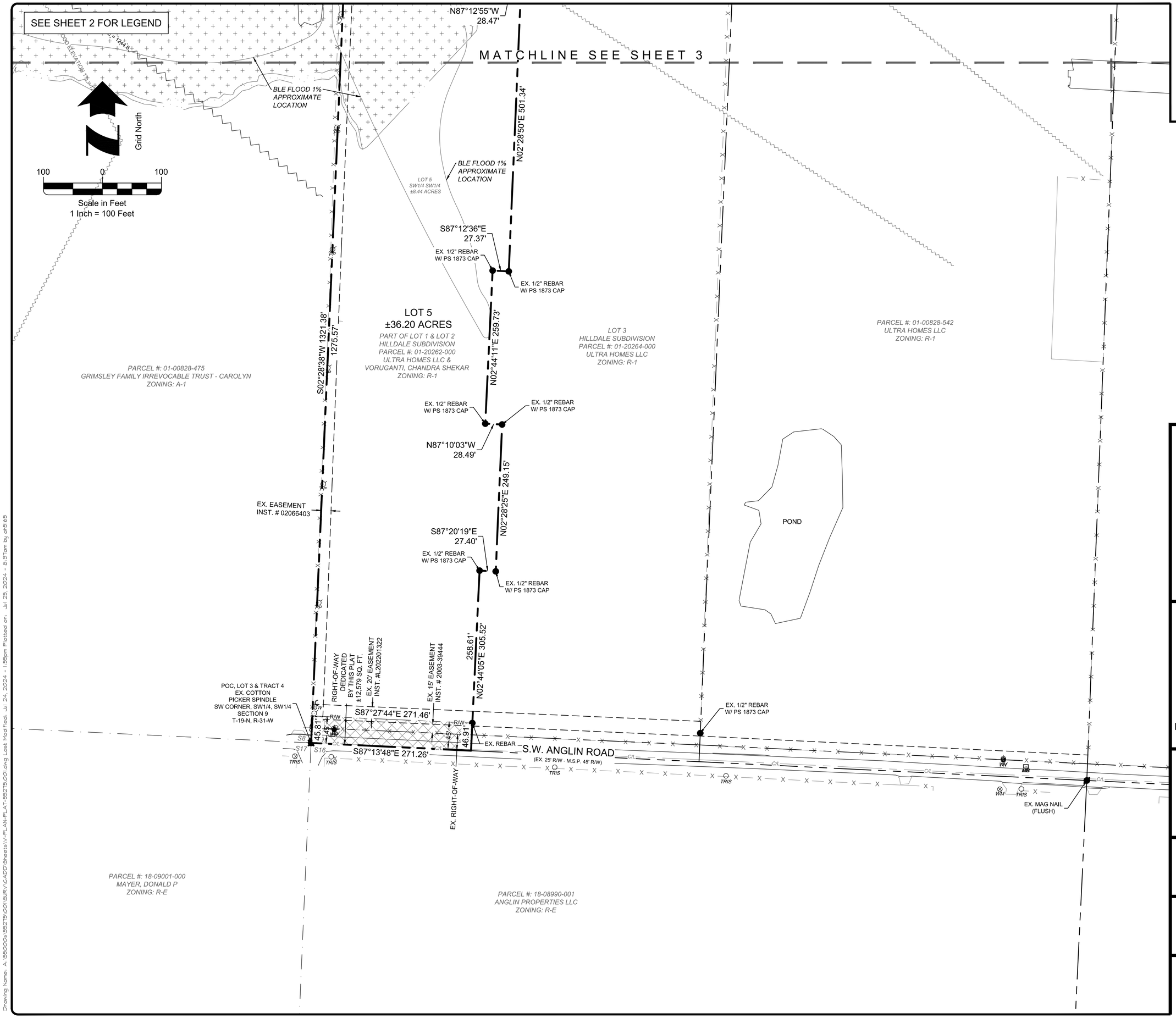

Filing Block

KEY MAP

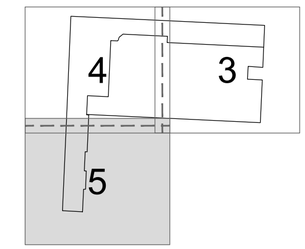

LICENSED PROFESSIONAL SURVEYOR
STATE OF ARKANSAS
NO. 1374
SIGNATURE
JAMES S. AUNSPACH
07/25/24

halff
HALFF ASSOCIATES, INC.
2407 SE COTTONWOOD ST. STE 1
BENTONVILLE, AR 72712
479.273.2209 - HALFF.COM

PROPERTY LINE ADJUSTMENT

Bentonville, Arkansas

City of Bentonville Project #: PLA24-0014

Prepared For: BAPUJI VAKKALAGADDA

Property Line Adjustment of lots 1 & 2 Hilldale Subdivision Creating Lot's 4 & 5 Hilldale Subdivision

Revisions

1	07.02.2024 - Revised Per City Comments
2	07.24.2024 - Revised Airport Overlay District Hatch
3	07.25.2024 - Revised Adjacent Owner Information

Drawn By:	**JDS**	Vert. Scale:	**N/A**
Approved By:	**JSA**	Horiz. Scale:	**1" = 100'**
Date:	**05.22.2024**	Plot Scale:	**1**
Project No.:	**55275.001**	DWG Name:	**PLAT**

SHEET **5** of 5

Drawing Name: A:\55000s\55275\001\SUR\CADD\Sheets\V-PLAN-PLAT-55275.001.dwg Last Modified: Jul 24, 2024 - 1:55pm Plotted on: Jul 25, 2024 - 8:37am by ah5165

ORDINANCE NO. _____

AN ORDINANCE ACCEPTING A PROPERTY LINE ADJUSTMENT OF LOTS 1 AND 2 OF HILLDALE SUBDIVISION CREATING NEW LOTS 4 AND 5 OF HILLDALE SUBDIVISION TO THE CITY OF BENTONVILLE, ARKANSAS; AND FOR OTHER PURPOSES.
(PROJECT NUMBER: PLA24-0014)

WHEREAS, pursuant to the provisions of the Land Development Code of the Bentonville Municipal Code, the property line adjustment of LOTS 1 AND 2 OF HILLDALE SUBDIVISION creating new LOTS 4 AND 5 OF HILLDALE SUBDIVISION the City of Bentonville, Benton County, Arkansas was submitted to the Bentonville Planning Commission on August 20, 2024;

WHEREAS, said property line adjustment is attached hereto as Exhibit "A";

WHEREAS, the Bentonville Planning Commission considered said property line adjustment on the date stated and at other times, and voted to recommend the approval of said property line adjustment to the City Council; and

WHEREAS, the property line adjustment of real property as described herein has been submitted to the City Council for the City of Bentonville, and after consideration and deliberation, said Council is of the opinion that said property line adjustment should be approved.

NOW, THEREFORE, BE IT ORDAINED BY THE CITY COUNCIL FOR THE CITY OF BENTONVILLE, ARKANSAS:

Section 1: That the property line adjustment of LOTS 1 AND 2 OF HILLDALE SUBDIVISION creating new LOTS 4 AND 5 OF HILLDALE SUBDIVISION to the City of Bentonville, Arkansas, should be and the same is hereby accepted and approved for all purposes;

Section 2: That the Mayor and City Clerk be and are hereby authorized and directed to evidence the acceptance of said property line adjustment by certifying said acceptance on the approved property line adjustment;

Section 3 - Severability Provision: If any part of this Ordinance is held invalid, the remainder of this Ordinance shall continue in effect as if such invalid portion never existed; and

Section 4 - Repeal of Conflicting Provisions: All Ordinances, Resolutions, or Orders of the City Council, or parts of the same, in conflict with this Ordinance are repealed to the extent of such conflict.

PASSED AND APPROVED this_____ day of _____, 2024.

APPROVED:

_____
Stephanie Orman, Mayor

ATTEST:

_____
Malorie Marrs, City Clerk

	Future Land Use Map Amendment - Roger J Reid Trust - Residential Estate to Medium Density Residential (MDR)
	8117 Southwest Morning Star Road
	PC Date: 8/20/2024

Staff Report Details

Project Number	RZ24-0025
Applicant / Current Owner	Odyssey Engineering, LLC/Roger J Reid Trust
Site Area	+/- 4.13 Acres
Current Zoning	A-1, Agriculture
Requested Zoning	R-2, Medium Density Two Family and Townhome Residential
Current Future Land Use Map Designation	R-E, Residential Estate
Requested Future Land Use Map Designation	Medium Density Residential (MDR)
Development Type / Use	
Related projects	

Property Description

The subject property is located at 8117 Southwest Morning Star Road. The property is presently zoned A-1, Agriculture with a Future Land Use designation of R-E, Residential Estate. The property has direct access to Southwest Morning Star Road and the stub of the proposed subdivision to the north, Reid Subdivision, known as Southwest Gather Road which is not yet constructed. Adjacent zoning districts include R-1, Low-Density Single-Family Residential to the North and East, A-1, Agriculture to the West, and unincorporated Benton County to the South. Adjacent Land Uses include R-E, Residential Estate on all sides.

Project Details

The applicant is requesting a rezoning of the subject property from A-1, Agriculture to R-2, Medium Density Two Family and Townhome Residential, along with a Land Use Map Amendment from R-E, Residential Estate to Medium Density Residential (MDR). The applicant has stated the rezoning is for future development. Traffic and utility access are also discussed in the applicant's narrative.

Relationship to the General Plan / Projected Traffic Impact

Relationship to the General Plan / Projected Traffic Impact

Chapter 5 of the Community Plan identifies this project in an area designated Areas of New Neighborhood Investment. These areas are designated to "include 'infill' through the subdivision of larger tracts of land surrounded by existing neighborhoods as well as the development of neighborhoods in new growth areas." Additionally, the project lies within Priority Area 3, Edge Growth, which as identified in the Community Plan is an area where "land that is proximate to existing infrastructure should be considered for new growth and development," contains 3 primary goals:

1. Accommodate anticipated long-term population growth
2. Maintain a desirable neighborhood character
3. Minimize the need for additional below-grade and surface infrastructure to accommodate growth.

The subject property does have access to water in Morning Star Road, although a small extension of sewer may be required, either from the subdivision approved to the North, or the existing subdivision to the East.

This priority area further directs edge growth in a responsible manner by discouraging zoning requests for new residential development in areas located more than a quarter-mile from existing public utilities, preventing premature development within unincorporated Benton County, approving new subdivisions only if they are within a quarter-mile of existing infrastructure and serve as logical connections or extensions, and lastly encouraging preservation of land for or integration of local commercial uses in new residential subdivisions. This proposal appears to meet several of these directives: first, the proposal is within a quarter-mile of existing public utilities and infrastructure and appears to be a logical connection to or extension of surrounding neighborhood patterns. The R-2 zoning district would not allow for integrated commercial uses.

Chapter 5 of the Community Plan references Neighborhoods and Housing and directs 5 goals for residential areas to strive for. These include:

1. Providing a variety of housing types that meet the spectrum of demands from Bentonville's diverse population
2. Improving the character of existing neighborhoods and ensuring that future neighborhoods reflect a compatible and high level of design
3. Providing proximity to, or integrate within neighborhood development, resident-based services such as parks, trails, public facilities, and local commerce.
4. Using creative, market-driven tools to maintain housing availability for all socioeconomic levels
5. Providing the residential environments that support the city's economic engine, employment base, and commerce.

R-2 zoning would allow for townhomes and duplexes in addition to single-family homes. The predominant land use in this area is single-family, and while the R-2 zoning does allow for other residential uses that would be able to increase the variety of housing types in this area, the code does not require that those uses be built. Single-family is still a permitted use under R-2 zoning. R-2 zoning also does not permit integrated commercial uses, but would allow for parks, trails, or other civic facilities. The degree to which these are provided would be better evaluated at the preliminary platting stage of development.

Public Comment

Has Staff received Public Comment at the time of this report? : **No**

Analysis / Waivers

The rezoning of this property appears consistent with the goals, guidelines, and directives of the Community Plan and Future Land Use Plan. While the surrounding zoning districts are predominately R-1, Low-Density Single-Family Residential, and the land uses predominately R-E, Residential Estate, the request for both R-2, Medium Density Two Family and Townhome Residential and Medium Density Residential (MDR) would serve the purpose of meeting several of the considerations contained within the Community Plan, including, but not limited to, expanding the variety of housing types in the Edge Growth zone. Further, the higher densities would be appropriate along Morning Star Road, which is designated as an arterial roadway.

Conclusion

Staff recommends approval of this rezoning request and land use amendment.

Additional Details

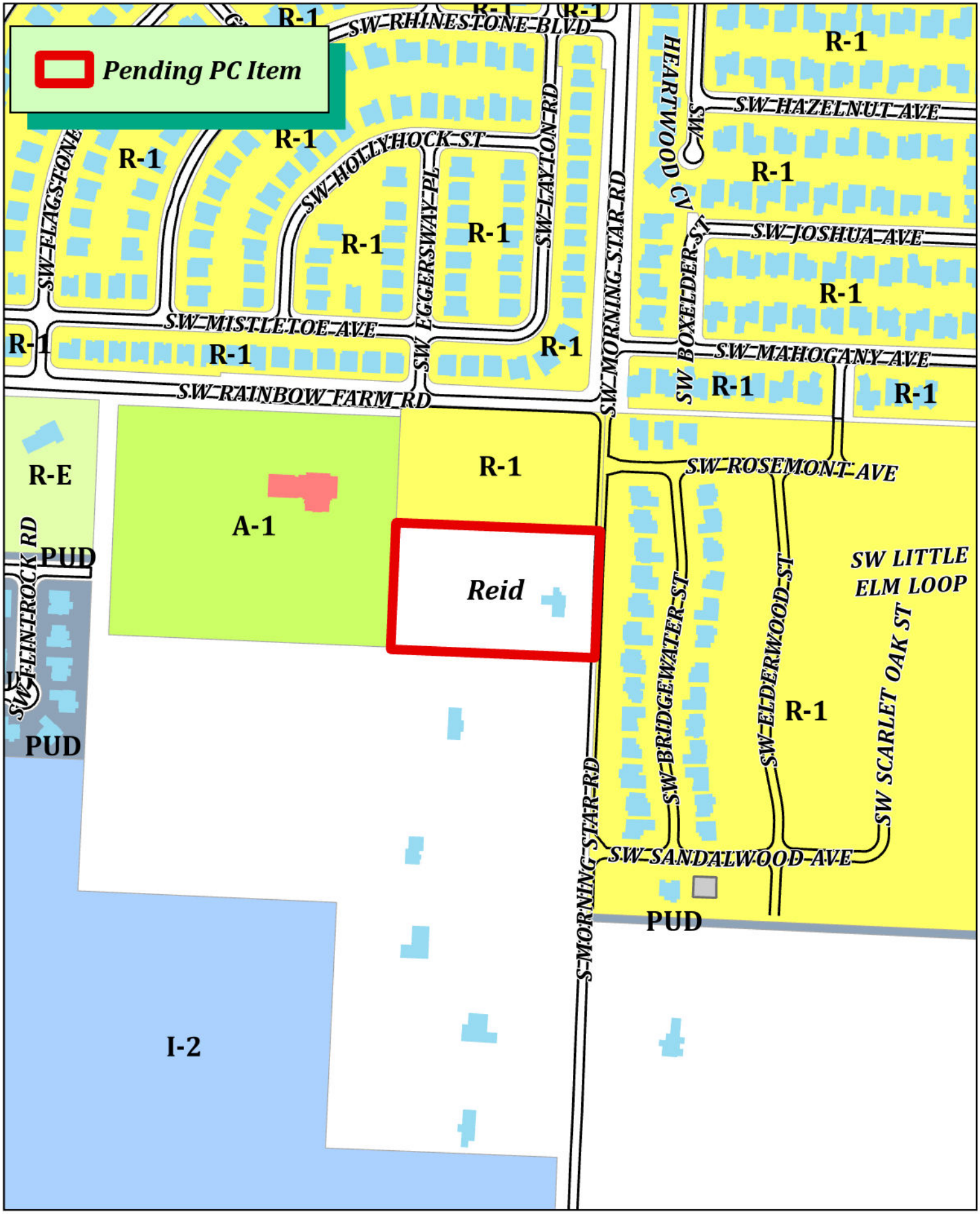

RZ24-0025
Reid
R-2
8117 S. Morningstar Rd

ODYSSEY ENGINEERING

June 5, 2024

City of Bentonville Planning Department
305 SW A Street
Bentonville, AR 72712

RE: 8117 S Morning Star Road [PIN 15-18446-000]; R-2 Rezoning Narrative

Dear City of Bentonville Staff:

Please consider this letter, along with all accompanying documents, as the submittal for the rezoning of parcel no.15-18446-000, more generally a 4.13-acre property located on the west side of S. Morning Star Road.

Along with the above request, we ask that the City consider amending the future land use map for this area from Agricultural to Medium-Density Residential.

The property is owned by the Roger J Reid Trust. There is an existing single-family home on the property. This parcel is currently in the process of being annexed into Bentonville, and the default zoning is A-1 (Agricultural). Once this property is annexed, the owner would like to propose a rezone of this property to R-2 (Medium-Density Residential) in order to develop the land. Residential zoning in this area is consistent with the surrounding properties.

Additional traffic is anticipated for the proposed development; however, no capacity issues are anticipated on Vaughn Road, and half street improvements will be completed with the development as required by Bentonville Code.

To the east, along S Morning Star Road, the property has access to a 12" water main owned by the City of Bentonville. The property also has access to an existing 8" gravity sewer main owned by the City of Bentonville, this is located across Morning Star Road.

Included with this letter you will find:

- Property Owner Consent
- Warranty Deed
- Draft Notice of Intent to Rezone
- Word Doc. of Legal Description

Should you have any questions regarding this submittal, please contact us at **479.480.3330** or **ctilley@odysseynwa.com**. We appreciate your time and review of this project and look forward to hearing from you.

Respectfully,

[redacted]

479.480.3330
facebook.com/odysseynwa
117 Parkwood St., Suite 101, Lowell, AR 72745

RESOLUTION NO. _____

A RESOLUTION AMENDING THE CITY OF BENTONVILLE FUTURE LAND USE MAP FOR A SPECIFIC AREA FROM RESIDENTIAL ESTATE TO MEDIUM-DENSITY RESIDENTIAL; AND FOR OTHER PURPOSES.
(PROJECT NUMBER: RZ24-0025)

WHEREAS, Roger J Reid Trust duly filed a petition with the Planning Commission requesting that the hereinafter described property situated in Benton County, Arkansas, be changed from its present land use classification of RESIDENTIAL ESTATE to MEDIUM-DENSITY RESIDENTIAL, which property is described as follows:

> A PART OF THE NORTHEAST 1/4 OF THE NORTHWEST 1/4 OF SECTION 14, TOWNSHIP 19 NORTH, RANGE 31 WEST OF BENTON COUNTY, AR, BEING MORE PARTICULARLY DESCRIBED AS FOLLOWS: COMMENCE AT THE NORTHEAST CORNER OF SAID NORTHEAST 1/4 OF THE NORTHWEST 1/4 OF SAID SECTION 14, THENCE S 02°57'54" WEST 321.29' TO THE POINT OF BEGINNING, THENCE S 02°27'54" W 334.94', THENCE N 87°36'21" W 538.38', THENCE N 02°25'59" E 333.85', THENCE S 87°43'18" E 538.57' TO THE POINT OF BEGINNING, CONTAINING 4.13 ACRES, MORE OR LESS. SUBJECT TO ANY AND ALL EASEMENTS OF RECORD OR FACT;

WHEREAS, the Planning Commission duly met and considered the application and duly set the petition for public hearing to be held August 20, 2024 at the Council Chambers of the City of Bentonville;

WHEREAS, public notice of said hearing having been published in the Northwest Arkansas Democrat Gazette for the time and in the manner required by law; and

WHEREAS, the Planning Commission voted to recommend to the City Council that the petition be approved and that said future land use classification as presented on the property be changed.

NOW, THEREFORE, BE IT RESOLVED BY THE CITY COUNCIL FOR THE CITY OF BENTONVILLE, ARKANSAS:

Section 1: That the above described real property is hereby changed from its present land use classification of RESIDENTIAL ESTATE to MEDIUM-DENSITY RESIDENTIAL on the City of Bentonville Future Land Use Map;

Section 2 - Severability Provision: If any part of this Resolution is held invalid, the remainder of this Resolution shall continue in effect as if such invalid portion never existed; and

Section 3 - Repeal of Conflicting Provisions: All Ordinances, Resolutions, or Orders of the City Council, or parts of the same, in conflict with this Resolution are repealed to the extent of such conflict.

PASSED AND APPROVED this _____ day of _____, 2024.

APPROVED:

_____

Stephanie Orman, Mayor

ATTEST:

_____

Malorie Marrs, City Clerk

ORDINANCE NO. _____

AN ORDINANCE CHANGING REAL ESTATE IN THE CITY OF BENTONVILLE, ARKANSAS, FROM ITS PRESENT ZONING CLASSIFICATION OF A-1, AGRICULTURAL TO R-2, MEDIUM DENSITY TWO FAMILY AND TOWNHOME RESIDENTIAL; AND FOR OTHER PURPOSES.

(PROJECT NUMBER: RZ24-0025)

WHEREAS, Roger J Reid Trust duly filed a petition with the Planning Commission requesting that the hereinafter described property situated in Benton County, Arkansas, be changed from its present zoning classification of A-1, AGRICULTURAL to R-2, MEDIUM DENSITY TWO FAMILY AND TOWNHOME RESIDENTIAL to be used in accordance with city zoning laws and state laws, which property is described as follows:

A PART OF THE NORTHEAST 1/4 OF THE NORTHWEST 1/4 OF SECTION 14, TOWNSHIP 19 NORTH, RANGE 31 WEST OF BENTON COUNTY, AR, BEING MORE PARTICULARLY DESCRIBED AS FOLLOWS: COMMENCE AT THE NORTHEAST CORNER OF SAID NORTHEAST 1/4 OF THE NORTHWEST 1/4 OF SAID SECTION 14, THENCE S 02°57'54" WEST 321.29' TO THE POINT OF BEGINNING, THENCE S 02°27'54" W 334.94', THENCE N 87°36'21" W 538.38', THENCE N 02°25'59" E 333.85', THENCE S 87°43'18" E 538.57' TO THE POINT OF BEGINNING, CONTAINING 4.13 ACRES, MORE OR LESS. SUBJECT TO ANY AND ALL EASEMENTS OF RECORD OR FACT.;

WHEREAS, the Planning Commission duly met and considered the application and duly set the petition for public hearing to be held August 20, 2024 in the Council Chambers of the City of Bentonville;

WHEREAS, public notice of said hearing having been published in the Northwest Arkansas Democrat-Gazette for the time and in the manner required by law; and

WHEREAS, the Planning Commission voted to recommend to the City Council that the petition be approved and that said property be rezoned from its present classification of A-1, AGRICULTURAL to R-2, MEDIUM DENSITY TWO FAMILY AND TOWNHOME RESIDENTIAL.

NOW, THEREFORE, BE IT ORDAINED BY THE CITY COUNCIL FOR THE CITY OF BENTONVILLE, ARKANSAS:

Section 1: That the above described real property is hereby changed from its present zoning classification of A-1, AGRICULTURAL to R-2, MEDIUM DENSITY TWO FAMILY AND TOWNHOME RESIDENTIAL to be used in accordance with the city zoning laws and state laws;

Section 2 - Severability Provision: If any part of this Ordinance is held invalid, the remainder of this Ordinance shall continue in effect as if such invalid portion never existed; and

Section 3 - Repeal of Conflicting Provisions: All Ordinances, Resolutions, or Orders of the City Council, or parts of the same, in conflict with this Ordinance are repealed to the extent of such conflict.

PASSED AND APPROVED this_____ day of _____, 2024.

APPROVED:

_____
Stephanie Orman, Mayor

ATTEST:

_____
Malorie Marrs, City Clerk

City of Bentonville, Arkansas Agenda Item Form

Item Details

Council Meeting Date:	8/27/2024	**Submitted By:**	Council member Agnew
Phone:		**For Department(s):**	City Council
Email:	gagnew@bentonvillear.com		

Item Type (Check all that apply)

- [x] Informational
- [ ] Bid Award
- [ ] Enter into an Agreement
- [ ] Change Order
- [ ] Recognizing Funds
- [ ] Budget Adjustment
- [ ] Waiver of Bid
- [ ] Emergency Clause
- [ ] Ordinance
- [ ] Resolution
- [x] Informational

Title, Recommendation & Justification

Title:	Discussion of Active Transportation Committee Creation
Action Recommendation & Justification:	Discuss creating an Active Transportation Committee and review of draft ordinances.
Additional Comments for Consideration (Optional):	At it's August 13, 2024 meeting, City Council voted to add a discussion item, creating a transportation committee, to its August 27, 2024 agenda. Included are two draft Ordinances. Draft #1 was compiled based on Council member Agnew's recommendations. Draft #2 was compiled in 2010 but not voted on by City Council. At one point there was an internal, staff only, Active Transportation Committee, with the goal of better coordinating trail and sidewalk planning.
Amount for Approval:	$

Budget Impact

Is this Item Budgeted? [ ] YES [ ] NO [x] ITEM HAS NO COST [ ] OTHER:_____

Budget Adjustment *(to be completed by Finance when applicable)*

Account Number (ORG-OBJECT)	Account Description	Expense	Revenue
		$	$
		$	$
		$	$
		$	$

Fund(s) Impacted (check all that apply) [ ] General Fund [ ] Utility Fund [ ] Street Fund [ ] Other(s):_____

Budget Impact Notes for Consideration (Optional):

DRAFT #2

ORDINANCE NO. _____

AN ORDINANCE CREATING AN ACTIVE TRANSPORTATION ADVISORY BOARD THAT SERVES IN AN ADVISORY ROLE TO THE MAYOR AND CITY STAFF IN THE PLANNING, IMPLEMENTING, AND ASSESSING OF THE ACTIVE TRANSPORTATION SYSTEM

WHEREAS, the Walton Family Foundation has generously donated funds to hire a full-time bike and pedestrian planner; and,

WHEREAS, a goal of the grant is to establish a bicycle and pedestrian task force that includes representation from parks and recreation, transportation, community development, law enforcement, public schools, Bentonville/Bella Vista Trailblazers and/or the Walton Family Foundation, and three citizens at-large; and,

WHEREAS, the Active Transportation Advisory Board is being established to achieve that goal of the grant and will ensure the continuity of the involvement of citizens in the development and education of the active transportation system in Bentonville;

NOW, THEREFORE, BE IT ORDAINED BY THE CITY COUNCIL FOR THE CITY OF BENTONVILLE, ARKANSAS.

Section 1. That the City is hereby establishing an Active Transportation Advisory Board with the following Attachment "A", three copies of which are on file with the City Clerk and which is hereby adopted by reference as though it were fully copied herein.

Section 2. This Ordinance shall be in full force and effect 30 days from the date of its passage and approval.

PASSED and APPROVED this _____ day of _____, 2010.

APPROVED:

_____
MAYOR

ATTEST:

_____
CITY CLERK

DRAFT

Attachment A

A. ROLE OF THE ACTIVE TRANSPORTATION ADVISORY BOARD (ATAB). The Active Transportation Advisory Board (Board) shall act in an advisory capacity to the City of Bentonville Mayor and City Council on all policy matters pertaining to active transportation, including trails, on-street pedestrian linkages, bike routes, bike lanes and education on active transportation. Board members are to work in the public interest and speak for the general community in matters regarding active transportation. It is the duty of the Board members to promote and foster community involvement in active transportation activities. The Board shall stimulate and encourage communication with members of the community to ensure that programs, goals and objectives are consistent with community needs and desires. The Board should focus a positive public attention on the active transportation system. The Board shall function in accordance with the policies and procedures established herein.

B. COMPOSITION.

1. The Board shall be composed of a minimum of nine (9) members composed of:
   - Five (5) citizens at-large that reside in the Bentonville city limits and are appointed by the Mayor.
     - The interests represented by this group should include but are not limited to the following: senior citizens, public transportation, bicycle commuters, sustainability issues, motorists, recreational cyclists, child educators and parents, regional interests
   - One (1) Parks and Recreation Advisory Board member;
   - One (1) City Council member;
   - One (1) representative from the Community Development Department; and,
   - One (1) representative from the Transportation Department.

2. Ex officio members may include:
   - a member of the Bentonville Parks and Recreation Department;
   - a member of the Bentonville Police Department;
   - a representative of the Bentonville School District; and,
   - a representative form the Bentonville/Bella Vista Trailblazers or the Walton Family Foundation.

4. The Board may create standing subcommittees, as needed, to address specific matters.

C. TERMS OF OFFICE. Board members shall be appointed by the City Council in accordance with the following:

1. Members of the Board shall serve for terms of three (3) years.

2. No Board member shall be eligible to serve more than two terms (full or partial) in succession.

3. Initially, the five citizens at-large will serve staggering terms, one member will serve one (1) year, two members will serve two (2) years, and two members will serve three (3) years. Thereafter, all terms will be three years.

D. REMOVAL. Any Board member appointed by the City Council may be removed at any time by a majority of the elected members of the City Council. The Mayor may also remove from office any Board member upon approval by the City Council.

E. OFFICERS. At the first meeting following the appointment of members, the Board shall elect from among its membership a chair and vice-chair. The officers shall serve one-year terms. No member shall serve more than two consecutive one-year terms as chairperson without interruption of at least a one-year period.

1. **Chairperson**. The chairperson is the principal officer and will preside at all meetings and shall rule on all matters of procedure regarding the order of business, motion, voting, etc. He or she shall appoint the necessary committees to establish the goals and meet the objectives of the Board. The chairperson shall have a vote in all matters of business.
2. **Vide-chairperson.** The vice-chairperson will serve in the same capacity as the chairman in the event the chairman is absent or in the event of his or her inability or refusal to act.

F. DUTIES. The Active Transportation Advisory Board shall:

1. Advocate and promote the accommodation of cyclists' and pedestrians' interests with respect to city projects such as road/sidewalk improvements and the creation or redesign of city parks.
2. Advocate current and ongoing community driven and city sponsored initiatives regarding active transportation activities and systems, including but not limited to the following:
    a. Application to the League of American bicyclists to designate Bentonville as a **Bicycle Friendly Community**.
    b. Participate in feasibility studies and implementation of a community **Bicycle Sharing Program**.
    c. Develop recommendations for the creation of a **Recycle a Bicycle** program for local children and families.
    d. Develop recommendations to adopt and implement a comprehensive **Safe Routes to Schools Master Plan** that includes safe trails, as well as marketing that promotes trails to local educators, school age children and parents.

   e. Develop recommendations for and implementation of a **Uniform Trail Signage and Identification** market system that creates landmarks and safety points along the trail system.

   f. Evaluate and develop recommendations for the creation of a **Bicycle and Pedestrian Friendly Maintenance Plan** for trails, bike lanes and shoulders ensuring they remain as safe as possible.

3. Develop, promote, and participate in future community driven and city sponsored initiatives regarding active transportation activities and systems

   a. Recommend active transportation recreation programs including but not limited to bicycle rodeos, bike to work week, National Bike Month, community bike rides, races and challenges, helmet fit seminars and cycling classes.

   b. Recommend to the Mayor and Parks Director guidelines and disciplines for annual scheduling of active transportation facilities.

4. Develop strategies to provide information to the public locally and regionally regarding active transportation activities and systems, including but not limited to publications about active transportation in the city newsletter.

5. Evaluate the current **Trails Master Plan** and proposed revisions.

6. Review design and development of current and proposed active transportation projects.

   a. Recommend to the Mayor and City Council the acceptance or rejection of public land dedication or other donations to be used for active transportation purposes.

   b. Propose and evaluate active transportation land acquisitions.

7. Work with the mayor and staff to help coordinate active transportation matters with public & private agencies.

8. Develop recommendations for alternative funding sources for active transportation acquisition and improvement and for facility and program maintenance and operation.

9. Recommend rules, regulations, and conflict resolution strategies for the efficient, safe and cost effective use of active transportation facilities.

10. Based on the recommendations of the Director of Parks and Recreation in accordance with the City's established schedules, annually adopt and recommend to the Mayor updates to the Parks and Recreation Department (Department) five year Capital Improvement Plan (CIP), annual Department capital budget and annual Department work program as they pertain to active transportation.

11. Develop by-laws to manage and provide Board direction.

12. Prepare an annual progress report on the activities of the Board.

G. MEETINGS.

1. The Board shall meet once each month, at a location in the City of Bentonville designated by the Board.
2. Special meetings may be called by the chairman or any three of the Board members at any time after 24 hours' prior written notice designating the time and place of such meeting.
3. All requirements of the laws of the State of Arkansas concerning open meetings and notice shall be met.
4. A quorum shall consist of any five (5) Board members. All actions of the Board shall be upon a vote of not less than a majority of the members present. All Board members except the ex officio member shall be entitled to vote upon all matters.

H. AUTHORITY OF THE BOARD. All decisions of such Board are subject to final consideration by the City Council or Mayor as appropriate or required by resolution, ordinance or statute. Provided, however, it is the intention of the City Council that all items within the scope of authority of the Board be submitted to the Board for consideration and recommendation prior to submission to the City Council for those matters which require Council action. The Mayor is authorized to provide available staff to assist the Board, as approved through City budget and expenditure processes.

I. LIMITATIONS OF AUTHORITY. The authority of the Board is expressly limited to the specific responsibilities and duties contained herein and nothing herein shall be construed or interpreted to:

1. Grant the Board authority over the operation of any department, division, office, officer, or employee of the City except as may be requested by the Mayor or City Council in special circumstances.
2. Diminish the responsibility of the Mayor in resolving conflicts which may arise over what specific items may be within the scope of authority of the Board.
3. Diminish the authority of the City Council over funding, operations, fixed assets, indebtedness, budget, and other areas as applicable under Arkansas law.
4. Create a commission under any state law regarding the creation of autonomous committees or commissions.

DRAFT #1

ORDINANCE NO. _____

AN ORDINANCE AMENDING CHAPTER ___, ARTICLE ___ OF THE CITY OF BENTONVILLE MUNICIPAL CODE; ESTABLISHING A TRANSPORTATION ADVISORY COMMITTEE; PROVIDING FOR THE EMERGENCY CLAUSE; AND FOR OTHER PURPOSES.

WHEREAS, the City of Bentonville City Council desires to create a transportation advisory committee; and

WHEREAS, establishing this committee serves to provide greater transparency and opportunity for input into City of Bentonville transportation plans.

NOW, THEREFORE, BE IT ORDAINED BY THE CITY COUNCIL OF THE CITY OF BENTONVILLE, ARKANSAS:

Section 1: That the City of Bentonville Municipal Code Chapter _____, Article _____ shall be amended as shown in the attached Exhibit "A";

Section 2 - Emergency Clause: The need to enact this Code change is immediate and an emergency is hereby declared to exist, and this Ordinance shall be in full force and effect from and after the date of its passage and approval;

Section 3 - Severability Provision: If any part of this Ordinance is held invalid, the remainder of this Ordinance shall continue in effect as if such invalid portion never existed; and

Section 4 - Repeal of Conflicting Provisions: All Ordinances, Resolutions, or Orders of the City Council, or parts of the same, in conflict with this Ordinance are repealed to the extent of such conflict.

PASSED AND APPROVED this_____ day of _____, 2023.

APPROVED:

_____

ATTEST: **Stephanie Orman, Mayor**

DRAFT

_____

Malorie Marrs, City Clerk

EXHIBIT "A"

Sec____ Transportation Advisory Committee

The City of Bentonville Transportation Advisory Committee shall be created and operated in compliance with the terms in this section:

(a) *Composition; compensation*.

(1) The transportation advisory committee shall be composed of seven (7) voting members. Members will be selected as follows and all appointments shall be approved by City Council:

a. One (1) member shall be a member of the Bentonville City Council, designated by the Mayor;

b. One (1) member shall be a member of the Planning Commission, designated by a majority vote of the Planning Commissioners;

c. One (1) member shall be a member of the Parks and Recreation Department, designated by the Parks and Recreation Director; and

d. Four (4) members shall be residents of the City of Bentonville, appointed by the Mayor through the established Boards and Commissions Application process, at least one (1) resident appointment shall represent a bicycle advocacy organization and at least one (1) resident appointment shall represent Americans with Disabilities (ADA).

(2) All members of the transportation advisory committee shall serve without compensation.

(b) *Term*. Each member of the transportation advisory committee shall hold office for a term of five (5) years.

(c) *Offices*. The transportation advisory committee shall select a chair, vice-chair, and secretary from amongst its members.

(d) *Meetings of the advisory board; responsibilities*. The advisory committee shall meet monthly and the Planning/Transportation/Parks and Recreation Director shall fully report to the advisory committee at such meetings on the progress of implementation of the various plans and projects approved by the advisory committee, the Mayor, and the city council. Specifically, the advisory committee shall provide oversight and make recommendations concerning plans, goals, and policies to govern transportation needs across the city. This is including, but not limited to:

(1) Yearly trail, sidewalk, and paving overlay construction program plans, focusing review of overlay plans on incorporation of active transportation facilities;

(2) 5-year trail and sidewalk construction prioritization plans;

DRAFT

(3) Major sidewalk projects, trails, and other projects where major changes to existing street cross sections are planned, including bond projects that may impact active transportation. The review will be at the preliminary stage and will include typical cross sections and preliminary horizontal and vertical alignments; however, city projects need to be delayed by waiting for approval from this advisory committee; and

(4) Changes, additions, or deletions to the Master Pedestrian & Bike Plan, Master Street Plans, and Minimum Street Standards, to the extent it impacts active transportation.

(e) *Reports*. One member of the advisory committee may present reports and recommendations to the Traffic Safety and Signage Committee, the Parks and Recreation Committee, the Planning Commission, or City Council as needed.

(f) *Agendas; notice*. Meetings of the transportation advisory committee are public meetings. Meeting agendas will be published in advance and notice of meetings will be posted on the City's website.

DRAFT