BENTONVILLE CITY COUNCIL AGENDA

Note – Some of the members of the City Council, as well as City staff members, may attend this meeting by phone or other remote means. For public health reasons, those who attend in person should keep in mind hygiene, the use facial coverings, and social distancing.

Public comments can be submitted by email submitted to cc.comments@bentonvillear.com by at least 4:00 p.m. on the day of the meeting. Those comments will be communicated to the members of the Council and the Mayor. Accommodation has also been made to allow Bentonville citizens to make "live" public comments orally in the event they cannot attend the meeting in person. To do so, please send an email indicating a desire to make public comments remotely to cc.comments@bentonvillear.com by at least 1:00 p.m. on the day of the meeting and a reply email will be sent with instructions about how your comments can be made. Making comments will require you to register with your name, address, phone number and email address. The pre-existing limitations (3 minutes) and procedures with respect to oral public comments will still apply.

City Council Meeting **Tuesday, June 22, 2021 6:00 p.m.**
City Hall **305 S.W. "A" Street**
Planning Commission Meeting Room
***If the public would like to attend virtually, please register at the following link by 4:00 p.m. on June 22, 2021:**
https://us02web.zoom.us/webinar/register/WN_0KdAv9hKSLSzqMMZp7IyHg

Public Comments on Tonight's Agenda Items (Limited Public Forum)
Questions, Comments and Discussion from City Council Members on Tonight's Agenda
Call to Order
Pledge of Allegiance
Moment of Silence – For our Military Forces
Roll Call
Approval of Minutes: June 8, 2021

AGENDA

1. Ordinance accepting the annexation of certain territory to the City of Bentonville, Arkansas, and making same a part of the City of Bentonville, and assigning same to wards. (Harris Annexation) **(Pages 8-34)**

2. Ordinance accepting the annexation of certain territory to the City of Bentonville, Arkansas, and making same a part of the City of Bentonville, and assigning same to wards. (Cousins Annexation) **(Pages 35-87)**

3. Planning:

3a. **Ordinance changing real estate from R-1, Single-Family Residential to DN-1, Downtown Low-Density Residential, 403 SW E Street, RZ20-0062.**

(Pages 90-93)

The Planning Commission voted 6-0, recommending approval.

The Downtown Neighborhood Subarea Plan of the Bentonville Community Plan depicts this property within a High Density Residential Character Area (p. 135). The Neighborhood Framework model depicted in the plan (p.137) defines High Density Residential Areas as areas immediately adjacent to the Downtown Core and Gateway Corridors, and plan for the highest density and range of housing types.

The Future Land Use Map currently depicts this property as Low-Density Residential. These areas typically include detached single-family residential properties and amenities for residents, including neighborhood parks, places of worship, etc.

3b. **Ordinance changing real estate from R-E, Residential Estate to R-1, Single-Family Residential, 1402 NW 12th Street, RZ20-0032.**

(Pages 94-96)

The Planning Commission voted 6-0, recommending approval.

The Future Land Use Map currently depicts this property as Low-Density Residential. These areas typically include detached single-family residential properties and amenities for residents, including neighborhood parks, places of worship, etc.

3c(1). **Resolution adopting revision to the Future Land Use Map changing real estate from Agricultural to Low-Density Residential, Amazing Land Company, LLC, 9207 South Morning Star Road.**

(Pages 97-99)

The Planning Commission voted 6-0, recommending approval.

The Future Land Use Plan currently depicts this property as Agricultural. Agricultural areas include larger properties used primarily for the raising of crops or livestock. These properties may include residence and farm-related structures.

While all of the surrounding properties have a Future Land Use Plan designation of Agricultural, the actual uses of the properties to the east and west are recently developed single-family subdivisions.

3c(2). **Ordinance changing real estate from A-1, Agricultural to R-1, Single-Family Residential, 9207 South Morning Star Road, RZ21-0034.**

(Pages 97-100)

The Planning Commission voted 6-0, recommending approval.

The Future Land Use Plan currently depicts this property as Agricultural. Agricultural areas include larger properties used primarily for the raising of crops or livestock. These properties may include residence and farm-related structures.

While all of the surrounding properties have a Future Land Use Plan designation of Agricultural, the actual uses of the properties to the east and west are recently developed single-family subdivisions.

3d. **Ordinance accepting a Property Line Adjustment: Lot 22 of Lefor's Addition, Mark Melton Construction, Inc., LLC, NW 2nd Street, R-1, Single-Family Residential, *PLA21-0019*.**

(Pages 101-103)

The Planning Commission voted 6-0, recommending approval.

A Property Line Adjustment of existing Lot 1 of Lefor's Addition, creating new Lot 22, (+/0.22 acres) of Lefor's Addition. The plat dedicates 2.5 feet of additional right-of-way along NW 2nd Street.

3e. **Ordinance accepting a lot split of Lots 11, 12, 13, and 14 of East Side 1st Addition, Pinnacle Villas LLC, 1004 & 1006 SE 3rd Street, D-2, Downtown Medium Density Residential.**

(Pages 104-106)

The Planning Commission voted 6-0, recommending approval.

A Lot Split of existing Lots 1 & 2 creating new Lot 11 (+/0.15 acres), Lot 12 (+/-0.14 acres), Lot 13 (+/-0.14 acres), and Lot 14 (+/-0.14 acres) of East Side 1st Addition. The plat dedicates various public utility easements to serve the newly created lots. Per the requirements of the Master Street, the plat also dedicates additional right-of-way for SE 3rd Street. Access to all lots shall be achieved through a single ingress/egress point conveyed by a private access easement onto SE 3rd Street allowing each home to be rear loaded by a garage.

4. Recognition by City Council of Alvin and Victoria Mizner who reside at 1704 NE Chapel Hill Drive. The property's landscaping was nominated by a Bentonville resident and is the June Residential Landscaping of the Month award winner.

(Pages 107-109)

5. Utility Board:

5a. Ordinance requested by Bentonville Water Utilities Staff for City Council approval amending Article 98-VI. Water Utilities Construction Specifications of the City of Bentonville Municipal Code. This is a direct replacement of Section 98-692 through Section 98-709. The new specifications will replace the 2008 version of

the specifications. The revision includes updating multiple part numbers and allowing for more reputable appurtenances from multiple manufacturers. Each modification has been thoroughly researched and tested in the field by City of Bentonville water and sewer personnel. Utility Board approved this item 5-0 on May 25, 2021. **(Pages 110-245)**

6. Resolution authorizing the Mayor and City clerk to enter in to a contract with Jackson, Brown, and Palculict (JBP) Architects to design an addition to Fire Station 3. JBP is doing the design work for 7.25% of the construction cost, estimated cost of construction is $750,000.00. **(Pages 246-262)**

7. Resolution authorizing the Mayor and City Clerk to enter in to a contract with Morrison Shipley for the civil engineering services for Station 3 building addition. Fire Department personnel chose Morrison Shipley after reviewing RFQ's on file with the City. **(Pages 263-279)**

8. Resolution allowing the Mayor to enter into a professional services agreement with Pollution Management, Inc. for engineering and project services for NW 5th and Bella Vista Drainage. The cost of this contract will be $34,600.00. This Firm was selected following the City's standard RFQ solicitation and selection process for the procurement of professional services in accordance with state law. **(Pages 280-294)**

9. Resolution allowing the Mayor to enter into a professional services agreement with Pollution Management, Inc. for engineering and project services for SE 6th and Main Lateral Drainage. The cost of this contract will be $22,050.00. This Firm was selected following the City's standard RFQ solicitation and selection process for the procurement of professional services in accordance with state law. **(Pages 295-309)**

10. Resolution allowing the Mayor to enter into a professional services agreement with Pollution Management, Inc. for engineering and project services for SE Henry and F Drainage. The cost of this contract will be $54,200.00. This Firm was selected following the City's standard RFQ solicitation and selection process for the procurement of professional services in accordance with state law. **(Pages 310-324)**

11. Resolution allowing the Mayor to enter into a professional services agreement with McClelland Consulting Engineers, Inc. for engineering and project services for NW 8th & F Drainage. The cost of this contract will be $139,520.00. This Firm was selected following the City's standard RFQ solicitation and selection process for the procurement of professional services in accordance with state law. **(Pages 325-344)**

12. Resolution allowing the Mayor to enter into a professional services agreement with McClelland Consulting Engineers, Inc. for engineering and project services for SE Lateral D. The cost of this contract will be $74,475.00. This Firm was selected following the City's standard RFQ solicitation and selection process for the procurement of professional services in accordance with state law. **(Pages 345-364)**

13. Resolution allowing the Mayor to enter into a professional services agreement with McClelland Consulting Engineers, Inc. for engineering and project services for Water Tower Road, SE 6th to E Battlefield Blvd (Phase 3). The cost of this contract will be $518,477.00. This Firm was selected following the City's standard RFQ solicitation and selection process for the procurement of professional services in accordance with state law. **(Pages 365-387)**

14. Resolution allowing the Mayor to enter into a professional services agreement with Crafton, Tull & Associates, Inc. for engineering and project services for SW I & SW 41st Intersection. The cost of this contract will be $346,000.00. This Firm was selected following the City's standard RFQ solicitation and selection process for the procurement of professional services in accordance with state law. **(Pages 388-401)**

15. Resolution allowing the Mayor to enter into a professional service agreement with CEI Engineering Associates for engineering and project services for SW 3rd and C Laterals. The cost of this agreement will be $196,287.00. This Firm was selected following the City's standard RFQ solicitation and selection process for the procurement of professional services in accordance with state law. **(Pages 402-423)**

16. Resolution allowing the Mayor to enter into a professional service agreement with CEI Engineering Associates for engineering and project services for SE C Laterals. The cost of this agreement will be $171,852.00. This Firm was selected following the City's standard RFQ solicitation and selection process for the procurement of professional services in accordance with state law. **(Pages 424-444)**

17. Resolution allowing the Mayor to enter into a professional service agreement with CEI Engineering Associates for engineering and project services for NW 9th and D Street. The cost of this agreement will be $237,090.00. This Firm was selected following the City's standard RFQ solicitation and selection process for the procurement of professional services in accordance with state law. **(Pages 445-467)**

18. Resolution allowing the Mayor to enter into a professional services agreement with Crafton, Tull & Associates, Inc. for engineering and project services for Moberly Lane - SE 14th to SE 8th. The cost of this contract will be $535,000.00. This Firm was selected following the City's standard RFQ solicitation and selection process for the procurement of professional services in accordance with state law. **(Pages 468-481)**

19a. Resolution allowing the Mayor to enter into an amended agreement with Morrison Shipley Engineers for engineering and project services for Bentonville Sidewalk Improvements. The cost of this amendment will be $64,610.00. **(Pages 482-487)**

19b. Budget Adjustment to pay for the amended agreement with Morrison Shipley Engineers for engineering and project services for Bentonville Sidewalk Improvements. **(Pages 488-489)**

20. Staff recommends that the Mayor and City Council approve a reconciliation change order for the NW 3rd Street and Walton Intersection Improvements project. The final contract amount is 33,142.19 less than the currently contracted amount of $654,598.25. DECCO Contractors-Paving, Inc. is also requesting additional contract time due to longer material lead times as a result of the COVID pandemic. The final contract amount after this reconciliation change order will be $621,456.06. **(Pages 490-498)**

21. Resolution setting a public hearing for July 13, 2021 for a Utility Easement Vacation requested for 3913 NE Kensington (VAC21-0011). **(Pages 499-501)**

22. Bid award #IFB-21-35 to American Soccer Company (Score Sports) for the purchase of soccer uniforms for the Fall 2021 and Spring 2022 soccer seasons per the attached unit price bid. **(Pages 502-522)**

23a. Resolution authorizing the Mayor to enter into an agreement with Hight Jackson and Associates to create a conceptual master plan and feasibility study for a future Adult Wellness Center in Bentonville. Hight Jackson and Associates was selected using the City's standard SOQ selection process for professional services in accordance with state law. **(Pages 523-532)**

23b. Council approval of a budget adjustment recognizing $40,000.00 in revenue via a Walton Family Foundation grant and allocating $80,000.00 in expenses to fund a study for a potential Adult Wellness Center in Bentonville. **(Pages 533-536)**

24. Council approval of a Real Estate Transaction with Crystal Bridges Museum of American Art for land near Crystal Bridges Trail and the Bentonville Community Center. **(Pages 537-544)**

25. Council approval of a Real Estate Transaction with Crystal Bridges Museum of American Art for land near SE 5th Street and the Momentary. **(Pages 545-552)**

26. Mayor Stephanie Orman is recommending the appointment of Lisa Kelley to Bentonville's Off-Street Parking District #3 Commission. Tom McCoy is resigning from his position upon the appointment of Ms. Kelley. **(Pages 553-556)**

27a. Ordinance to amend the pay plan to change the title of Community Relations and Economic Development Director to the new title of Director of Administration and also to add one position as Associate Staff Attorney to the pay plan as a grade 37. **(Pages 557-560)**

27b. Budget Adjustment to move funds from Airport Professional Services and Administration Professional Services to cover the cost of staffing changes for the Mayor's Office in relation to ending the 3rd Party Airport Manager contract and reassigning roles to current staff and adding an additional staff member. **(Pages 561-564)**

28a. Approve Ordinance for a Bid Waiver to Stephens Insurance for property insurance for the period of July 8, 2021 through July 8, 2022. This policy will be with Affiliated FM. Stephens Insurance acts as the City's broker for property insurance, reaching out to insurance carriers and recommending the carrier chosen. See attached proposal. The total cost of property insurance is $373,275.00 with all but $21,959.00 budgeted. The unbudgeted amount is related to the additional funds to cover Electric Department replacement cost increases. The remaining amount of $21,959.00 will paid from Utility Fund Reserves. **(Pages 565-605)**

28b. Budget Adjustment in relation to the 2021 Property Insurance. The Electric Department increased the estimated replacement costs for substations based upon recent construction estimates. This budget adjustment provides for additional funds to pay for the increase in premiums related to that replacement cost increase. The total cost of property insurance is 373,275.00 with all but this amount of $21,959.00 budgeted. **(Pages 606-607)**

29a. Ordinance to amend Sec 2-377 and Sec 2-378 of the Purchasing section of the Municipal Code to increase the dollar amount from $20,000.00 to $35,000.00 in each section. Amend Sec 2-377 to read "The mayor of the city or his duly authorized representative, shall have exclusive power and responsibility to make purchases of all supplies, apparatus, equipment, materials and other things requisite for public purposes for the city and to make all necessary contracts for work or labor to be done or material or other necessary things to be furnished for the benefit of the city where the amount of the expenditure for any purpose or contract does not exceed the sum of $35,000.00. Amend Sec 2-378 to read Except as provided otherwise herein, where the amount of expenditure for any purchase or contract exceeds the sum of $35,000.00, the mayor of the city, or his duly authorized representative, shall invite competitive bids thereon by legal advertisement in any local newspaper. Bids received pursuant to said advertisement shall be opened and read on the date set for receiving said bids, in the presence of the mayor, or his duly authorized representative. The contract shall be awarded to the lowest responsible bidder; provided, however, the mayor, or his duly authorized representative, may reject any and all bids received. The requirement of competitive bidding may be waived by ordinance of the city council in cases where it is not feasible. Pursuant to state law, contracts for professional services shall not be subject to competitive bidding. **(Pages 608-610)**

29b. Resolution to approve a Purchasing Policy. **(Pages 611-629)**

30. Resolution to approve a Fund Balance and Reserve Policy. **(Pages 630-635)**

31. Resolution to approve a Cash Management and Investment Policy. **(Pages 636-650)**

32. Approve an ordinance authorizing the issuance of sales and use tax bonds for the purpose of financing and refinancing the cost of capital improvements; pledging a 1% sales and use tax to pay the principal of and interest on the bonds; prescribing other matters relating thereto; and declaring an emergency. **(Pages 651-681)**

Agenda Item Form

Date of City Council Meeting	**June 22nd 2021**
Department	**Administration**
Submitted by	**Jim Wheeless**
Phone	**(479) 271-5926**

Item Type: (*Check All That Apply*)

☐ Budget Adjustment	☐ Change Order	☐ Informational	☑ Ordinance	☐ Resolution	☐ Bid Award

Recommendation/Suggested Action *(Enter recommendation in space below):*

Ordinance accepting the annexation of certain territory to the City of Bentonville, Arkansas, and making same a part of the City of Bentonville, and assigning same to wards. (Harris Annexation)

Estimated Cost	**$**
Is this Item Budgeted?	☐ Yes ☐ No

If no, please explain how item will be funded *(briefly explain in space below)* **:**

ORDINANCE NO._____

AN ORDINANCE ACCEPTING THE ANNEXATION OF CERTAIN TERRITORY TO THE CITY OF BENTONVILLE, ARKANSAS, AND MAKING SAME A PART OF THE CITY OF BENTONVILLE, AND ASSIGNING SAME TO WARDS.

WHEREAS, petition was filed with the County Clerk of Benton County, Arkansas by all of the owners of the hereinafter described territory, said owners being listed in Exhibit "A" to this ordinance, praying that said territory be annexed to, and made a part of the City of Bentonville, Arkansas, and

WHEREAS, on the **21st** day of **May**, **2021**, the County Court of Benton County, Arkansas, entered an order authorizing annexation pursuant to § 14-40-609 of the Arkansas Code, finding that the petition met the requirements for annexation under that provision and directed the Clerk to forward the order to the Mayor of the City of Bentonville; and

NOW, THEREFORE BE IT ORDAINED BY THE CITY COUNCIL OF THE CITY OF BENTONVILLE, ARKANSAS:

Section 1. That the land described on the attached Exhibit "B," which includes both the territory sought to be annexed by the petitioners and the dedicated public roads and rights of way abutting or traversing the property proposed to be annexed, is territory contiguous to and adjoining the City of Bentonville, Arkansas, and the petition to annex that property is hereby granted and the property described in Exhibit "B" is hereby accepted as part of and annexed to and made a part of the City of Bentonville.

Section 2. That the above described territory shall be annexed to and made a part of Ward _3_ of the City of Bentonville, and the same shall henceforth be a part of said ward as fully as existing parts of said ward.

Section 3. That the above described territory shall be zoned ___A-1_, to be used in accordance with City zoning laws and the laws of the State of Arkansas.

Section 4: That this ordinance shall become effective 30 days from its passage and approval.

PASSED AND APPROVED THIS _____ DAY OF June, 2021.

APPROVED: _____
HON. STEPHANIE ORMAN, Mayor

ATTEST: _____
HON. KIRBY ROMINES, City Clerk

Exhibit 'A'
Harris Annexation

Harris Family Revocable Trust-Nelda Jo_____18-09145-000

Juanita M. Harris_____18-09145-001

City of Bentonville_____18-09145-002

Exhibit 'B'
Harris Annexation

The NE ¼ of the NW ¼ of Section 24, Township 19N, Range 31W

AND

The SE ¼ of the NW ¼ of Section 24, Township 19N, Range 31W

AND

Harris Annexation ROW
to be Maintained by Bentonville

Part of the NE ¼ of the SW ¼ of Section 24, Township 19N, Range 31W and more particularly described as follow:

Beginning at the Northwest Corner of said NE ¼ of the SW ¼, Section 24, Township 19N, Range 31W.
Thence S87°12'37"E, 326.80';
Thence S02°24'37"W, 9.93';
Thence N87°49'26"W, 326.56';
Thence N01°22'43"E, 13.43' to the Point of Beginning.

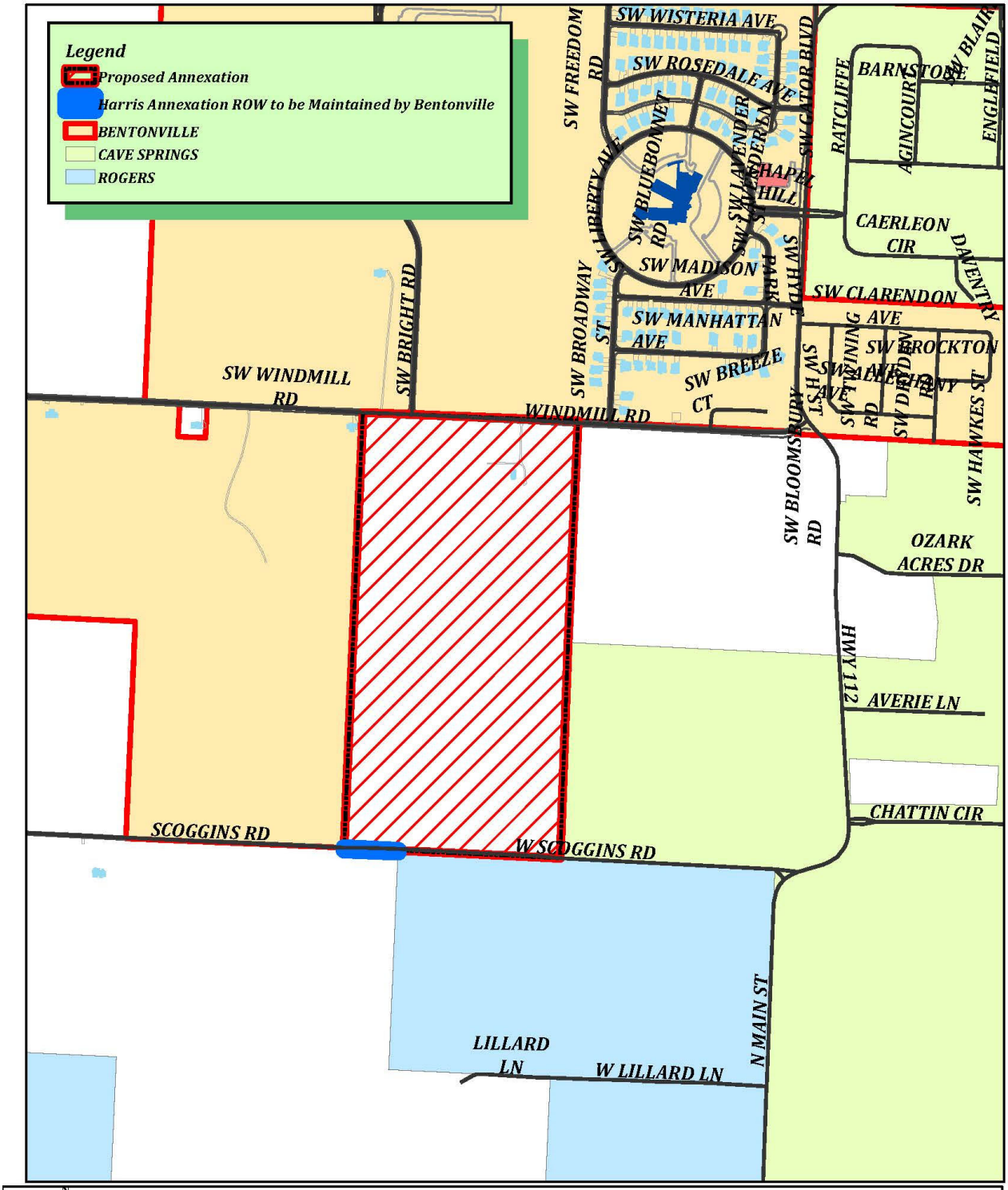
Legend
Proposed Annexation
Harris Annexation ROW to be Maintained by Bentonville
BENTONVILLE
CAVE SPRINGS
ROGERS
SW WISTERIA AVE
SW ROSEDALE AVE
SW FREEDOM RD
SW LIBERTY AVE
SW BLUEBONNET RD
SW LAVENDER RD
SW GATOR BLVD
SW BLAIR
ENGLEFIELD
RATCLIFFE
BARNSTORE
AGINCOURT
CHAPEL HILL
CAERLEON CIR
DAVENTRY
SW MADISON AVE
SW MANHATTAN AVE
SW BROADWAY ST
SW PARK
SW CLARENDON AVE
SW BROCKTON AVE
SW WINDMILL RD
SW BRIGHT RD
WINDMILL RD
SW BREEZE CT
SW BLOOMSBURY RD
SW HAWKES ST
OZARK ACRES DR
HWY 112
AVERIE LN
CHATTIN CIR
SCOGGINS RD
W SCOGGINS RD
N MAIN ST
LILLARD LN
W LILLARD LN
1 inch = 721 feet
Exhibit 'B'
Harris Annexation

BENTON COUNTY

STATE OF ARKANSAS

BETSY HARRELL

COUNTY CLERK & VOTER REGISTRAR
215 EAST CENTRAL, SUITE 217
BENTONVILLE, AR 72712-5373
479-271-1013
Fax: 479-271-1019

PROBATE COURT CLERK
COURTHOUSE, 102 N.E. "A" STREET
BENTONVILLE, AR 72712-5350
479-271-5727
FAX: 479-271-1712

May 21, 2021

Honorable Stephanie Orman
City of Bentonville
305 SW A St
Bentonville, AR 72712

Re: In the Matter of Annexing to the City of Bentonville, Arkansas Certain Territory Contiguous To Said City of Bentonville, Arkansas

Dear Mayor Orman:

The County has received and processed a proposed annexation pursuant to ACA § 14-40-609 related to annexations by 100% of the property owners. I am transmitting to you a copy of the documents relating to the proposed annexation for consideration by the Bentonville City Council.

If your council and you approve the annexation, please ask your clerk or recorder to return to me one (1) certified copy of the plat of the annexed property and one (1) certified copy of the ordinance or resolution approving the annexation so that I can send those on to the Secretary of State as required by the statute.

Please feel free to contact me if you have questions.

Sincerely,

[redacted]

BETSY HARRELL, County Clerk

enc

FILED

2021 MAY 21 AM 10: 00

BETSY HARRELL
CO & PROBATE CLERK
BENTON COUNTY, AR

IN THE MATTER OF ANNEXING TO THE
CITY OF BENTONVILLE, ARKANSAS
CERTAIN TERRITORY CONTIGUOUS TO SAID
CITY OF BENTONVILLE, ARKANSAS

COUNTY COURT CASE NO. CC 2021-17

ORDER AUTHORIZING ANNEXATION PURSUANT TO ACA § 14-40-609

I, Barry Moehring, County Judge of Benton County, having reviewed the attached petition for annexation and verification of petition, hereby find that the petition:

1) is in writing;
2) contains an attestation signed before a notary or notaries by the property owner or owners of the relevant property or properties confirming their desire to be annexed;
3) contains an accurate description of the relevant property or properties;
4) contains a letter or title opinion from a certified abstractor or title company verifying that the petitioners are all owners of record of the relevant property or properties;
5) contains a letter or verification from a certified surveyor or engineer verifying that the relevant property or properties are contiguous with the annexing city or town and that no enclaves will be created if the property or properties are accepted by the city or town – additionally a copy of the letter from the State of Arkansas GIS office approving the legal description for the annexation was provided; and
6) includes a schedule of services of the annexing city or town that will be extended to the area within three (3) years after the date the annexation becomes final.

The County Clerk is directed to forward a copy of this order and the related Petition to the Mayor of the City of BENTONVILLE.

[redacted]

HON. BARRY MOEHRING, County Judge

May 21st, 2021

Date

2021 2970

FILED

2021 MAY 21 AM 9:26

BETSY HARRELL
CO & PROBATE CLERK
BENTON COUNTY, AR

IN THE MATTER OF ANNEXING TO THE
CITY OF BENTONVILLE, ARKANSAS
CERTAIN TERRITORY CONTIGUOUS TO SAID
CITY OF BENTONVILLE, ARKANSAS

CC 2021-17

VERIFICATION OF PETITION FOR ANNEXATION PURSUANT TO ACA § 14-40-609

We, Betsy Harrell, County Clerk of Benton County, and Roderick Grieve, County Assessor of Benton County, attest as follows:

Our offices have received the attached petition seeking annexation. The petition has been reviewed and we hereby verify that the petition:

(A) is in writing;

(B) contains an attestation signed before a notary or notaries by the property owner or owners of the relevant property or properties confirming the desire to be annexed;

(C) contains an accurate description of the relevant property or properties;

(D) contains a letter or title opinion from a certified abstractor or title company verifying that the petitioners are all owners of record of the relevant property or properties;

(E) contains a letter or verification from a certified surveyor or engineer verifying that the relevant property or properties are contiguous with the annexing city or town and that no enclaves will be created if the property or properties are accepted by the city or town; and

(F) include a schedule of services of the annexing city or town that will be extended to the area within three (3) years after the date the annexation becomes final.

[redacted]
HON. BETSY HARRELL, County Clerk

[redacted]
HON. RODERICK GRIEVE, County Assessor

FILED

2021 MAY 21 AM 9:26

BETSY HARRELL
CO & PROBATE CLERK
BENTON COUNTY, AR

Date: May 20, 2021
Subject: Proposed Annexation Checklist
CC 2021-17 Bentonville, AR

✓ (A) is in writing;

✓ (B) contains an attestation signed before a notary or notaries by the property owner or owners of the relevant property or properties confirming the desire to be annexed;

✓ (C) contains an accurate description of the relevant property or properties;

✓ (D) contains a letter or title opinion from a certified abstractor or title company verifying that the petitioners are all owners of record of the relevant property or properties;

✓ (E) contains a letter or verification from a certified surveyor or engineer verifying that the relevant property or properties are contiguous with the annexing city or town and that no enclaves will be created if the property or properties are accepted by the city or town; and

✓ (F) include a schedule of services of the annexing city or town that will be extended to the area within three (3) years after the date the annexation becomes final.

N/A [Additionally, we note that the legal description in (B) does not include in its description certain dedicated public roads and rights of way abutting or traversing the property to be annexed, the legal descriptions for which are included on the attached Exhibit "A"]

[redacted]

Michael D. Million
Manager – GIS-Mapping Dept.
Benton County Assessor's Office
Phone: 479-271-1037, ext. 7004
Email: michael.million@bentoncountyar.gov

FILED

2021 MAY 19 PM 3:11

BETSY MADRELL
CO & PROBATE CLERK
UNTY, AR

IN THE MATTER OF ANNEXING TO THE CITY
OF BENTONVILLE, ARKANSAS CERTAIN TERRITORY
CONTIGUOUS TO SAID CITY

NO. 2021-17

PETITION FOR ANNEXATION – 100 % OF OWNERS PETITIONING

DATE: 5/19/21

Come now the undersigned petitioners, and state as follows:

1. That we, owning 100% of the property in the following described area, do hereby petition, pursuant to A.C.A. §14-40-609, the City Council of Bentonville, Arkansas, to annex the following lands to the City of Bentonville, Arkansas.

Refer to Exhibit "A"

2. We further state that this petition is signed by one hundred percent (100%) of the real estate owners owning one hundred percent (100%) of the acreage in said area and that the area to be annexed does not contain property whose owners do not wish to have their property annexed.

3. That said property description herein is contiguous to and adjoining the present City of Bentonville city limits, as shown on the map attached hereto as Exhibit "B".

4. That no enclaves will be created if this petition is accepted and the territory annexed into the City of Bentonville.

5. That the following schedule of services shall be extended to the area by the City of Bentonville within three (3) years after the date the annexation becomes final:

All properties annexed into the City of Bentonville are provided with Police, Fire and EMS services.

Additional services such as water and sewer may be provided if readily available. Such services are provided in accordance with existing ordinances and terms of service, including but not limited to the payment of required fees, the necessary permits, inspections and approvals.

FILED
2021 MAY 19 PM 3:11
BETSY HARRELL
CO & PROBATE CLERK
BENTON COUNTY, AR

6. That a letter or title opinion from a certified abstractor or title company verifying that the petitioners are all owners of record of the relevant property or properties is attached hereto as Exhibit "C" and is made part of this petition as if set out word for word herein.

7. That a letter or verification from a certified surveyor or engineer verifying that the relevant property or properties are contiguous with the City of Bentonville and that no enclaves will be created if the property or properties are accepted by the City of Bentonville is attached hereto as Exhibit "D" and is made part of this petition as if set out word for word herein.

8 That each of the undersigned persons executing this petition has confirmed by their signature a desire that their property, which is included in the property described above, be annexed into the City of Bentonville.

FILED
2021 MAY 19 PM 3:11
CIRCUIT & PROBATE CLERK
BENTON COUNTY, AR

I confirm my desire that property owned by me, which is to be included in a petition to annex property, be annexed into the City of Bentonville.

If the property being annexed is owned jointly, I attest that all owners of the property are signing a copy of this confirmation.

If the property is owned by a trust, I attest either that I have the authority to sign this confirmation on behalf of the trust, or that all persons required to do so by the trust are signing a copy of this confirmation.

If the property is owned by a corporation, limited liability company or other entity I attest either that I have the authority to sign this confirmation on behalf of the entity, or that all persons required to do so by the entity's governing documents are signing a copy of this confirmation.

[redacted] Trustee Harris Family Revokable Trust

Signature of Property Owner or Legal Representative of Property Owner, Petitioner

Title, if applicable (i.e. Trustee, (Managing Member, President, Secretary)

18-09145-000

Parcel number of property to be annexed

ACKNOWLEDGMENT

State of Arkansas)
) ss.
County of Benton)

On this the 30th day of April, 2020, before me, the undersigned officer, personally appeared Melda Jo Harris, known to me (or satisfactorily proven) to be the person whose name is subscribed above and acknowledged and attested that it was executed for the purposes therein apparent.

[redacted]
NOTARY PUBLIC

My Commission Expires:

5-23-2022

KRISTIN BARNES NOTARY PUBLIC ARKANSAS BENTON COUNTY 12387950 EXPIRES 5-23-2022

9171 Windmill Rd
Bentonville AR
72713

FILED

2021 MAY 19 PM 3:11

BETSY HARRELL
CO & PROBATE CLERK
BENTON COUNTY, AR

I confirm my desire that property owned by me, which is to be included in a petition to annex property, be annexed into the City of Bentonville.

If the property being annexed is owned jointly, I attest that all owners of the property are signing a copy of this confirmation.

If the property is owned by a trust, I attest either that I have the authority to sign this confirmation on behalf of the trust, or that all persons required to do so by the trust are signing a copy of this confirmation.

If the property is owned by a corporation, limited liability company or other entity I attest either that I have the authority to sign this confirmation on behalf of the entity, or that all persons required to do so by the entity's governing documents are signing a copy of this confirmation.

[redacted]

Signature of Property Owner or Legal Representative of Property Owner, Petitioner

Title, if applicable (i.e. Trustee, (Managing Member, President, Secretary)

18-09145-001

Parcel number of property to be annexed

ACKNOWLEDGMENT

State of Arkansas)
) ss.
County of Benton)

On this the 30th day of April, 2020, before me, the undersigned officer, personally appeared Juanita M. Harris, known to me (or satisfactorily proven) to be the person whose name is subscribed above and acknowledged and attested that it was executed for the purposes therein apparent.

[redacted]

NOTARY PUBLIC

My Commission Expires:

5-23-2022

KRISTIN BARNES
NOTARY PUBLIC
ARKANSAS
BENTON COUNTY
12387950 EXPIRES 5-23-2022

9216 Scoggin Rd
Bentonville AR
72713

FILED

2021 MAY 19 PM 3:11

BETSY HARRELL
CIRCUIT CLERK
BENTON COUNTY, AR

I confirm my desire that property owned by me, which is to be included in a petition to annex property, be annexed into the City of Bentonville.

If the property being annexed is owned jointly, I attest that all owners of the property are signing a copy of this confirmation.

If the property is owned by a trust, I attest either that I have the authority to sign this confirmation on behalf of the trust, or that all persons required to do so by the trust are signing a copy of this confirmation.

If the property is owned by a corporation, limited liability company or other entity I attest either that I have the authority to sign this confirmation on behalf of the entity, or that all persons required to do so by the entity's governing documents are signing a copy of this confirmation.

[redacted] Mayor

Signature of Property Owner or Legal Representative of Property Owner, Petitioner

Title, if applicable (i.e. Trustee, (Managing Member, President, Secretary)

18-09145-002

Parcel number of property to be annexed

ACKNOWLEDGMENT

State of Arkansas)
) ss.
County of Benton)

On this the 6th day of May, 2020, before me, the undersigned officer, personally appeared Mayor Stephanie Orman known to me (or satisfactorily proven) to be the person whose name is subscribed above and acknowledged and attested that it was executed for the purposes therein apparent.

[redacted]

NOTARY PUBLIC

My Commission Expires:

5/24/2026

JANICE E. HOPKINS
NOTARY PUBLIC
ARKANSAS
BENTON COUNTY
12348330 EXPIRES 5-24-2026

FILED
2021 MAY 19 PM 3:11
BETSY HARRELL
CIRCUIT & PROBATE CLERK
BENTON COUNTY, AR

Harris Annexation
Exhibit 'A'

The NE ¼ of the NW ¼ of Section 24, Township 19N, Range 31W

AND

The SE ¼ of the NW ¼ of Section 24, Township 19N, Range 31W

Harris Annexation ROW
to be maintained by Bentonville

Part of the NE ¼ of the SW ¼ of Section 24, Township 19N, Range 31W and more particularly described as follow:

Beginning at the Northwest Corner of said NE ¼ of the SW ¼, Section 24, Township 19N, Range 31W.
Thence S87°12'37"E, 326.80';
Thence S02°24'37"W, 9.93';
Thence N87°49'26"W, 326.56';
Thence N01°22'43"E, 13.43' to the Point of Beginning.

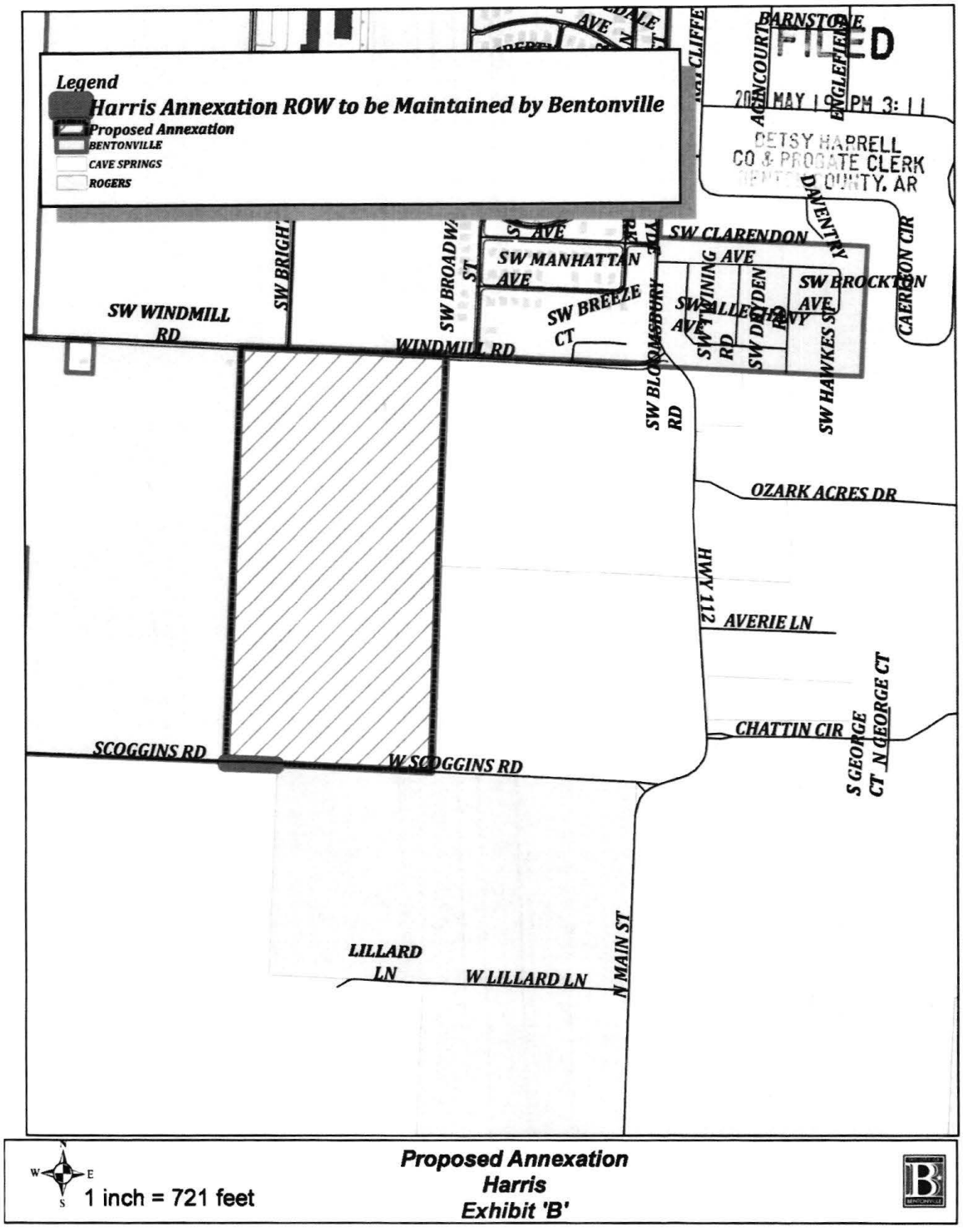
Legend
Harris Annexation ROW to be Maintained by Bentonville
Proposed Annexation
BENTONVILLE
CAVE SPRINGS
ROGERS
FILED
2021 MAY 10 PM 3:11
BETSY HARRELL
CO & PROBATE CLERK
BENTON COUNTY, AR
BARNSTONE
AGINCOURT
EAGLEFIELD
DAVENTRY
CAERLEON CIR
SW CLARENDON AVE
SW MANHATTAN AVE
SW BROCKTON AVE
SW BREEZE CT
SW WINDMILL RD
WINDMILL RD
SW BROADWAY ST
SW BLOOMSBURY RD
SW HAWKES SQ
OZARK ACRES DR
HWY 112
AVERIE LN
CHATTIN CIR
S GEORGE CT
N GEORGE CT
SCOGGINS RD
W SCOGGINS RD
LILLARD LN
W LILLARD LN
N MAIN ST
1 inch = 721 feet
Proposed Annexation
Harris
Exhibit 'B'

EXHIBIT "C"

Benton
216 W Sevier Street
Benton, AR 72015

Bentonville
300 SW 28th Street
Bentonville, AR 72712

Eureka Springs
70 S. Main Street, Suite 2
Eureka Springs, AR 72632

Fayetteville
1420 Augustine Lane, Suite 1
Fayetteville, AR 72703

Sheridan
206 N Rose Street
Sheridan, AR 72150

First National Title Company

Headquarters
First National Title Company
Little Rock
415 N McKinley Street Suite 1200
Little Rock, AR 72205

Faulkner County Title Company
A Division of
First National Title Company
Conway
711 Locust Street
Conway, AR 72034

Little Rock Title Company
A Division of
First National Title Company
Little Rock
[illegible] Markham Street #100
Little Rock, AR 72201

[illegible]
8 Wilson Park
Greenbrier, AR 72058

FILED
2021 MAY 19 PM 3:11
BETSY HARRELL
CO & PROBATE CLERK
[illegible] COUNTY, AR

March 19th, 2021

Greetings,

This letter is given in connection with what is understood to be an effort to voluntarily annex certain real property into the City of Bentonville. Based on our review, we verify that the persons listed in Exhibit C-1 to this letter are all the owners of record of the real property described in Exhibit C-2 to this letter.

[redacted]

Steve Pangle

Benton County Manager

First National Title

FILED

2021 MAY 19 PM 3:11

BETSY HARRELL
CORPORATE CLERK
BENTON COUNTY, AR

Harris Annexation
EXHIBIT "C-1"

Harris Family Revocable Trust-Nelda Jo	18-09145-000
Juanita M. Harris	18-09145-001
City of Bentonville	18-09145-002

FILED

2021 MAY 19 PM 3:11

BETSY HARRELL
CO. & PROBATE CLERK
[illegible] COUNTY, AR

Harris ANNEXATION
EXHIBIT "C-2"

The NE ¼ of the NW ¼ of Section 24, Township 19N, Range 31W

AND

The SE ¼ of the NW ¼ of Section 24, Township 19N, Range 31W

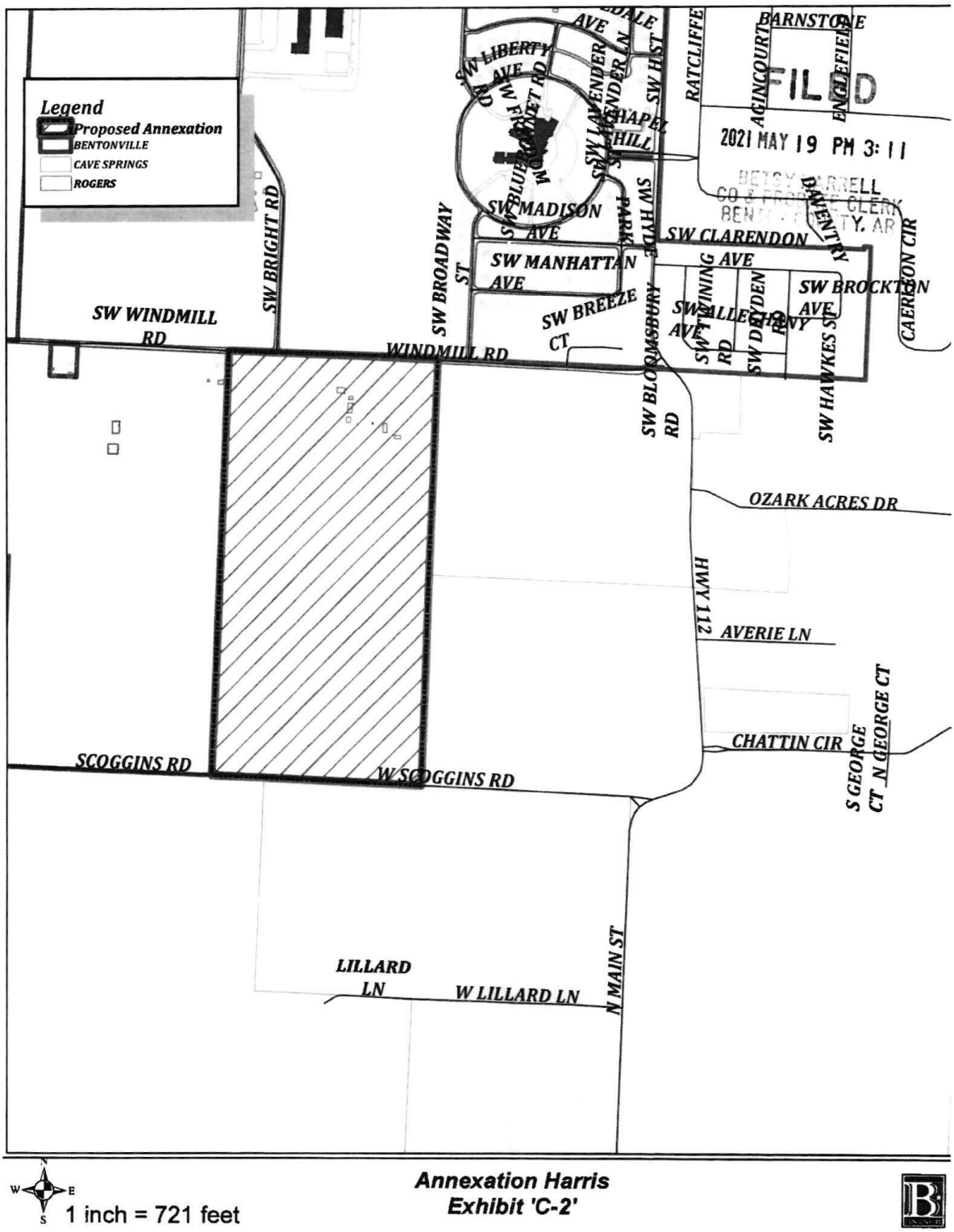
Legend
Proposed Annexation
BENTONVILLE
CAVE SPRINGS
ROGERS
FILED
2021 MAY 19 PM 3:11
SW WINDMILL RD
SW BRIGHT RD
SW BROADWAY ST
SW MADISON AVE
SW MANHATTAN AVE
SW BREEZE CT
SW CLARENDON AVE
SW BROCKTON AVE
SW HAWKES SQ
SW BLOOMSBURY RD
WINDMILL RD
OZARK ACRES DR
HWY 112
AVERIE LN
CHATTIN CIR
S GEORGE CT
N GEORGE CT
SCOGGINS RD
W SCOGGINS RD
LILLARD LN
W LILLARD LN
N MAIN ST
BARNSTONE
RATCLIFFE
AGINCOURT
ENGLEFIELD
SW CHAPEL HILL
SW LAVENDER LN
SW LIBERTY AVE
SW BLUEBONNET RD
1 inch = 721 feet
Annexation Harris
Exhibit 'C-2'

EXHIBIT 'D'

FILED

2021 MAY 19 PM 3:11

BETSY HARRELL
CIRCUIT & PROBATE CLERK
BENTON COUNTY, AR

Greetings:

This letter is given in connection with what is understood to be an effort to voluntarily annex certain real property (Harris Annexation) into the City of Bentonville. I am a licensed Professional Engineer in the State of Arkansas. Based on my review, I verify that the real property described in Exhibit D-1 to this letter is contiguous with the City of Bentonville and that no enclaves will be created if the described property is accepted by the City of Bentonville.

Sincerely,

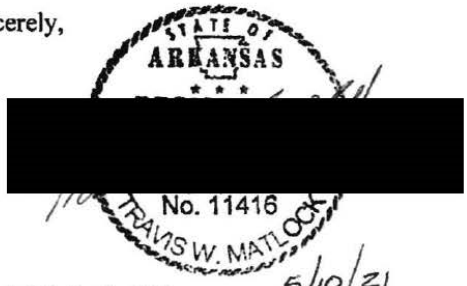

5/10/21

Travis Matlock, P.E.

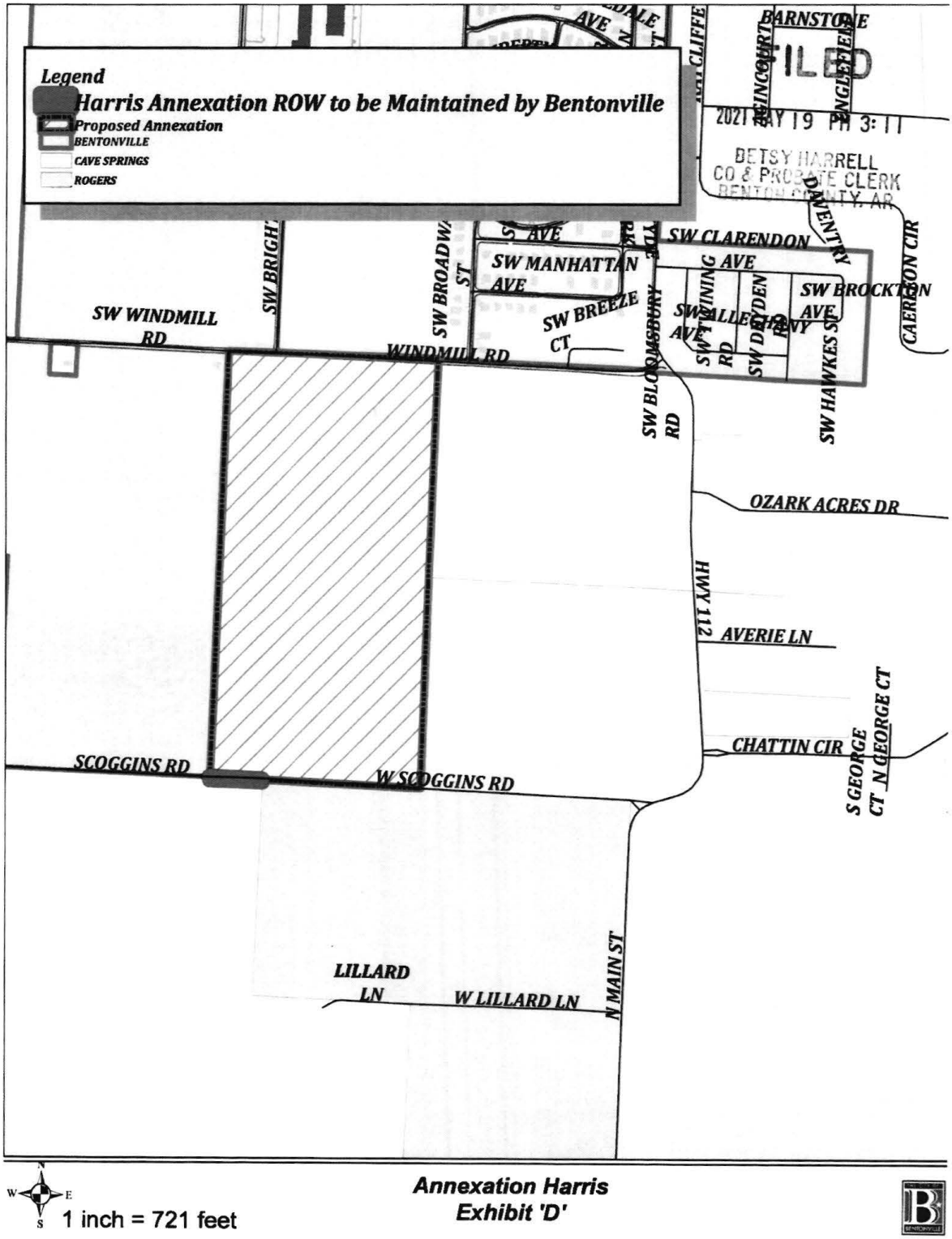
Legend
Harris Annexation ROW to be Maintained by Bentonville
Proposed Annexation
BENTONVILLE
CAVE SPRINGS
ROGERS
FILED
2021 MAY 19 PM 3:11
BETSY HARRELL
CO & PROBATE CLERK
BENTON COUNTY, AR
BARNSTONE
SW CLARENDON AVE
SW MANHATTAN AVE
SW BROCKTON AVE
SW WINDMILL RD
WINDMILL RD
SW BREEZE CT
SW BLOOMSBURY RD
SW HAWKES ST
OZARK ACRES DR
HWY 112
AVERIE LN
CHATTIN CIR
S GEORGE CT
N GEORGE CT
SCOGGINS RD
W SCOGGINS RD
LILLARD LN
W LILLARD LN
N MAIN ST
1 inch = 721 feet
Annexation Harris
Exhibit 'D'

FILED
2021 MAY 19 PM 3:11
BETSY HARRELL
CO & PROBATE CLERK
BENTON COUNTY, AR

Harris ANNEXATION
EXHIBIT "D-1"

The NE ¼ of the NW ¼ of Section 24, Township 19N, Range 31W.

AND

The SE ¼ of the NW ¼ of Section 24, Township 19N, Range 31W

Harris Annexation ROW
to be maintained by Bentonville

Part of the NE ¼ of the SW ¼ of Section 24, Township 19N, Range 31W and more particularly described as follow:

Beginning at the Northwest Corner of said NE ¼ of the SW ¼, Section 24, Township 19N, Range 31W.
Thence S87°12'37"E, 326.80';
Thence S02°24'37"W, 9.93';
Thence N87°49'26"W, 326.56';
Thence N01°22'43"E, 13.43' to the Point of Beginning.

FILED

Department of Transformation and Shared Services
Governor Asa Hutchinson
Secretary Amy Fecher
Director Shelby Johnson

2021 MAY 13 PM 3:12
CO & PROBATE CLERK
COUNTY, AR

May 5, 2021

Mr. Jim Wheeless
GIS Coordinator – City of Bentonville
305 SW A Street
Bentonville, AR 72712

RE: City of Bentonville Annexation Coordination Requirement

Mr. Wheeless,

Thank you for coordinating with our office as you seek to annex property into the City of Bentonville, AR located in Section 24, Township 19 North, Range 31 West and described as the "Harris" Annexation. This letter represents confirmation that you have coordinated with our office (Arkansas GIS Office) as specified in *§ 14-40-101* (Act 914 of 2015) of the 90th General Assembly.

Our office will wait completion of any additional steps necessary for the proposed boundary change, which normally comes from the Arkansas Secretary of State Elections Division after any appropriate filing by your County Clerk.

Sincerely,

[redacted]

Jennifer Wheeler, Sr. GIS Analyst

Attachments:
GIS Office Map of Proposed Annexation
Legal Description
Secretary of State Municipal Change Checklist

H:\City_Annexations\Cities\Bentonville\20210505\Doc\20210505_Bentonville_Annexation_Coordination_Letter.docx

Arkansas Geographic Information Systems
501 Woodlane Street, Suite G04 ★ Little Rock, AR 72201 ★ 501.682.2767
TRANSFORM.AR.GOV

FILED

2021 MAY 19 PM 3:12

BETSY HARRELL
CO & PROBATE CLERK
BENTON COUNTY, AR

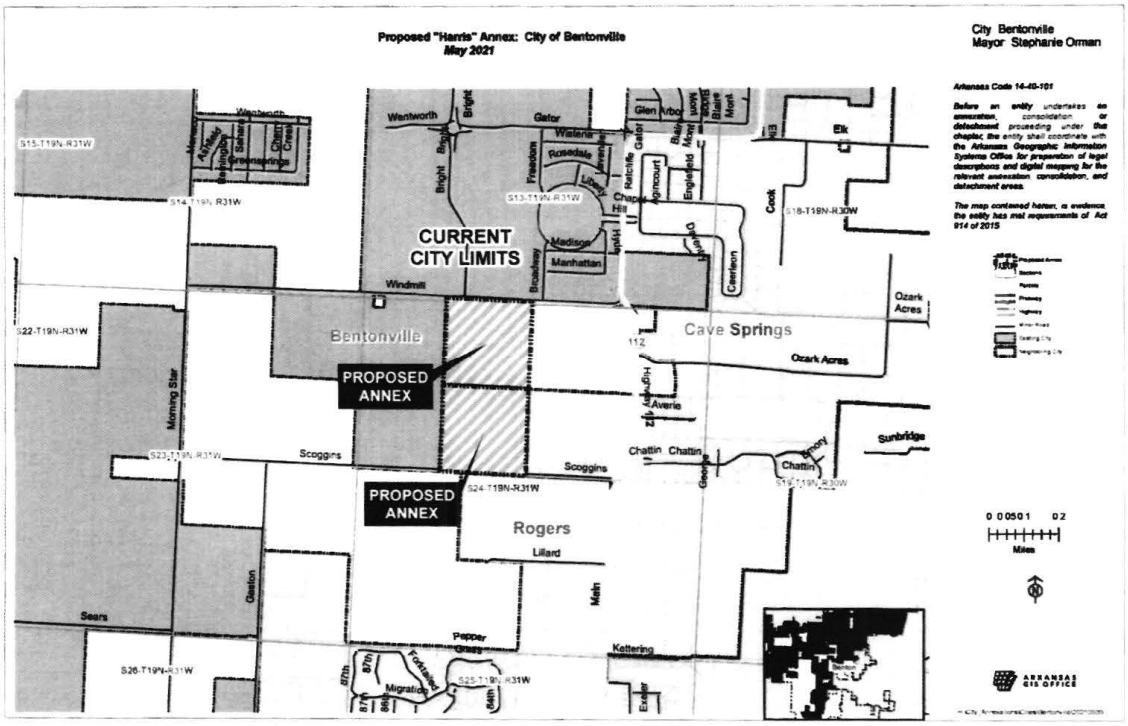

FILED

2021 MAY 19 PM 3:12

BETSY HARRELL
CIRCUIT & PROBATE CLERK
BENTON COUNTY, AR

Harris Annexation
Exhibit 'A'

The NE ¼ of the NW ¼ of Section 24, Township 19N, Range 31W

AND

The SE ¼ of the NW ¼ of Section 24, Township 19N, Range 31W

Agenda Item Form

Date of City Council Meeting	**June 22nd 2021**
Department	**Administration**
Submitted by	**Jim Wheeless**
Phone	**(479) 271-5926**

Item Type: (*Check All That Apply*)

☐ Budget Adjustment	☐ Change Order	☐ Informational	☑ Ordinance	☐ Resolution	☐ Bid Award

Recommendation/Suggested Action (*Enter recommendation in space below*):

An Ordinance accepting the annexation of certain territory to the City of Bentonville, Arkansas, and making same a part of the City of Bentonville, and assigning same to wards. (Cousins Annexation)

Estimated Cost	**$**
Is this Item Budgeted?	☐ Yes ☐ No

If no, please explain how item will be funded (*briefly explain in space below*) :

ORDINANCE NO._____

AN ORDINANCE ACCEPTING THE ANNEXATION OF CERTAIN TERRITORY TO THE CITY OF BENTONVILLE, ARKANSAS, AND MAKING SAME A PART OF THE CITY OF BENTONVILLE, AND ASSIGNING SAME TO WARDS.

WHEREAS, petition was filed with the County Clerk of Benton County, Arkansas by all of the owners of the hereinafter described territory, said owners being listed in Exhibit "A" to this ordinance, praying that said territory be annexed to, and made a part of the City of Bentonville, Arkansas, and

WHEREAS, on the ____ day of **June**, **2021**, the County Court of Benton County, Arkansas, entered an order authorizing annexation pursuant to § 14-40-609 of the Arkansas Code, finding that the petition met the requirements for annexation under that provision and directed the Clerk to forward the order to the Mayor of the City of Bentonville; and

NOW, THEREFORE BE IT ORDAINED BY THE CITY COUNCIL OF THE CITY OF BENTONVILLE, ARKANSAS:

Section 1. That the land described on the attached Exhibit "B," which includes both the territory sought to be annexed by the petitioners and the dedicated public roads and rights of way abutting or traversing the property proposed to be annexed, is territory contiguous to and adjoining the City of Bentonville, Arkansas, and the petition to annex that property is hereby granted and the property described in Exhibit "B" is hereby accepted as part of and annexed to and made a part of the City of Bentonville.

Section 2. That the above described territory shall be annexed to and made a part of Ward _3_ of the City of Bentonville, and the same shall henceforth be a part of said ward as fully as existing parts of said ward.

Section 3. That the above described territory shall be zoned A-1, to be used in accordance with City zoning laws and the laws of the State of Arkansas.

Section 4: That this ordinance shall become effective 30 days from its passage and approval.

PASSED AND APPROVED THIS _____ DAY OF June, 2021.

APPROVED: _____
HON. STEPHANIE ORMAN, Mayor

ATTEST: _____
HON. KIRBY ROMINES, City Clerk

Exhibit 'A'
Cousins Annexation

Rogers, Jeffrey & Jacqueline_____18-08140-004

Cousins, Jimmy L. & Phyllis_____18-09342-000

Ponder Cousins, Inc._____18-08122-003

Ponder Cousins, Inc._____18-08115-000

Cousins, Kevin J. & Melany_____18-08122-001

Betz, Thomas G. & Lisa D._____18-08140-005

Betz, Thomas G. & Lisa D._____18-08140-030

Exhibit 'B'
Cousins Annexation

18-08122-001

Part of the SW ¼ of Section 2, Township 18N, Range 31W and more particularly described as follows:

Commencing at the SW Corner of said Section 2, Township 18N, Range 31W.
Thence N2°35'25"e, 75.77' to the Point of Beginning.
Thence N02°35'25"E, 1268.55';
Thence S84°57'17"E, 723.62';
Thence S38°48'13"E, 300.43';
Thence S45°19'08"W, 114.20';
Thence S44°58'05"W, 582.03';
Thence S44°47'17"W, 672.67' to the Point of Beginning.

18-08115-000

Part of Section 2, Township 18N, Range 31W and more particularly described as follows.

The NE ¼ of the NW ¼ of said Section 2, Township 18N, Range 31W.

AND

The SE ¼ of the NW ¼ of said Section 2, Township 18N, Range 31W.

AND

The West Half of the NW ¼ of the NE ¼ of said Section 2, Township 18N, Range 31W.

Less and Except

Part of the West Half of the NW ¼ of the NE ¼ of said Section 2, Township 18N, Range 31W and more particularly described as follows:

Beginning at the NW Corner of said West Half of the NW ¼ of the NE ¼ of said Section 2, Township 18N, Range 31W;
Thence S90°00'00"E, 305.00';
Thence S01°20'18"W, 170.00';
Thence N90°00'00"W, 305.00';
Thence N01°20'18"E, 170.00' to the Point of Beginning.

18-09342-000

The SE ¼ of the SW ¼ of Section 35, Township 19N, Range 31W.

18-08122-003

The SW ¼ of the NW ¼ of Section 2, Township 18N, Range 31W.

18-08140-005

Part of the NE ¼ of the SE ¼ of Section 3, Township 18N, Range 31W and more particularly described as follows:

Beginning at the NE Corner of said NE ¼ of the SE ¼ of Section 3, Township 18N, Range 31W;

Thence S02°36'03"W, 661.84';
Thence S89°05'38"W, 61.90';
Thence N28°07'57"W, 253.06';
Thence N85°29'58"W, 239.63';
Thence N03°33'59"E, 447.22';
Thence S86°27'07"E, 423.13' to the Point of Beginning.

18-08140-030

Part of the NE ¼ of the SE ¼ of Section 3, Township 18N, Range 31W and more particularly described as follows:

Commencing at the NE Corner of said NE ¼ of the SE ¼ of Section 3, Township 18N, Range 31W;
Thence S86°27'07"W, 423.13';
Thence S03°33'59"W, 447.22' to the Point of Beginning.

Thence S16°46'24"E, 441.55';
Thence N61°41'29"E, 51.58';
Thence N49°51'21"E, 242.50';
Thence N28°07'57"W, 253.06';
Thence N85°29'58"W, 239.63' to the Point of Beginning.

18-08140-004

Part of the NE ¼ of the SE ¼ of Section 3, Township 18N, Range 31W and more particularly described as follows:

Commencing at the NE Corner of said NE ¼ of the SE ¼ of Section 3, Township 18N, Range 31W;
Thence S02°36'03"W, 661.84' to the Point of Beginning;

Thence S02°36'04"W, 659.53';
Thence N86°27'36"W, 378.07';
Thence N08°22'36"W, 367.12';
Thence N61°41'14"E, 242.57';
Thence N49°51'36"E, 242.56';
Thence N89°05'38"E, 61.90' to the Point of Beginning.

ROW to be Maintained by Bentonville

Part of the NE ¼ of the SE ¼ of Section 3, Township 18N, Range 31W and more particularly described as follows:

Commencing at the NE Corner of said NE ¼ of the SE ¼ of Section 3, Township 18N, Range 31W;
Thence S02°36'03"W, 661.84';
Thence S89°10'37"W, 61.79';
Thence S49°51'36"W, 242.56';
Thence S61°39'22"W, 51.66' to the Point of Beginning.

Thence S61°41'44"W, 190.91';
Thence N28°18'46"W, 20.00';
Thence N61°41'14"E, 190.91';
Thence S28°18'46"E, 20.03' to the Point of Beginning.

ROW to be Maintained by Bentonville

Part of the SW ¼ of the SE ¼ and Part of the NW ¼ of the NE ¼ of Section 35, Township 19N, Range 31W and more particularly described as follows:

Beginning at the SW Corner of said SW ¼ of the SE ¼;
Thence N02°21'03"E, 20.00';
Thence S87°35'34"E, 306.69';

Thence S02°18'21"W, 40.00';
Thence N87°35'34"W, 306.88';
Thence N02°48'08"E, 20.00' to the Point of Beginning.

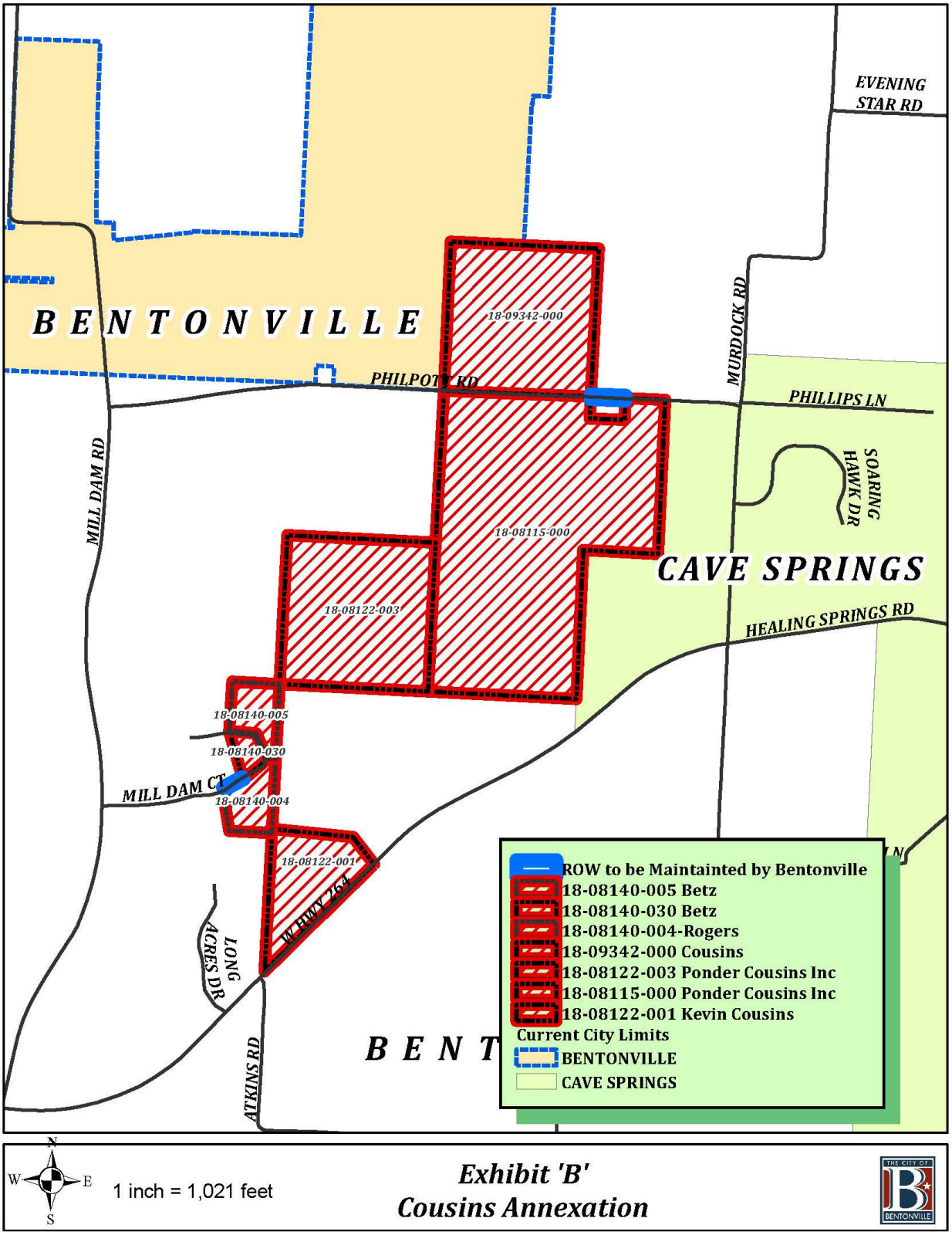
EVENING STAR RD
BENTONVILLE
18-09342-000
MURDOCK RD
PHILPOTT RD
PHILLIPS LN
MILL DAM RD
SOARING HAWK DR
18-08115-000
CAVE SPRINGS
18-08122-003
HEALING SPRINGS RD
18-08140-005
18-08140-030
MILL DAM CT
18-08140-004
18-08122-001
W HWY 264
LONG ACRES DR
ATKINS RD
ROW to be Maintainted by Bentonville
18-08140-005 Betz
18-08140-030 Betz
18-08140-004-Rogers
18-09342-000 Cousins
18-08122-003 Ponder Cousins Inc
18-08115-000 Ponder Cousins Inc
18-08122-001 Kevin Cousins
Current City Limits
BENTONVILLE
CAVE SPRINGS
N
W
E
S
1 inch = 1,021 feet
Exhibit 'B'
Cousins Annexation

18-09342-000
JIMMY COUSINS
PHYLLIS COUSINS

FILED
2021 JUN 17 AM 10:46
BETSY HARRELL
CO & PROBATE CLERK
BENTON COUNTY, AR

IN THE MATTER OF ANNEXING TO THE CITY OF BENTONVILLE, ARKANSAS CERTAIN TERRITORY CONTIGUOUS TO SAID CITY

NO. 2021-18

PETITION FOR ANNEXATION – 100 % OF OWNERS PETITIONING

DATE: 6-9-2021

Come now the undersigned petitioners, and state as follows:

1. That we, owning 100% of the property in the following described area, do hereby petition, pursuant to A.C.A. §14-40-609, the City Council of Bentonville, Arkansas, to annex the following lands to the City of Bentonville, Arkansas.

Refer to Exhibit "A"

2. We further state that this petition is signed by one hundred percent (100%) of the real estate owners owning one hundred percent (100%) of the acreage in said area and that the area to be annexed does not contain property whose owners do not wish to have their property annexed.

3. That said property description herein is contiguous to and adjoining the present City of Bentonville city limits, as shown on the map attached hereto as Exhibit "B".

4. That no enclaves will be created if this petition is accepted and the territory annexed into the City of Bentonville.

5. That the following schedule of services shall be extended to the area by the City of Bentonville within three (3) years after the date the annexation becomes final:

All properties annexed into the City of Bentonville are provided with Police, Fire and EMS services.

Additional services such as water and sewer may be provided if readily available. Such services are provided in accordance with existing ordinances and terms of service, including but not limited to the payment of required fees, the necessary permits, inspections and approvals.

FILED
2021 JUN 17 AM 10:46
BETSY HARRELL
CO & PROBATE CLERK
BENTON COUNTY, AR

6. That a letter or title opinion from a certified abstractor or title company verifying that the petitioners are all owners of record of the relevant property or properties is attached hereto as Exhibit "C" and is made part of this petition as if set out word for word herein.

7. That a letter or verification from a certified surveyor or engineer verifying that the relevant property or properties are contiguous with the City of Bentonville and that no enclaves will be created if the property or properties are accepted by the City of Bentonville is attached hereto as Exhibit "D" and is made part of this petition as if set out word for word herein.

8 That each of the undersigned persons executing this petition has confirmed by their signature a desire that their property, which is included in the property described above, be annexed into the City of Bentonville.

18-08140-004
JEFFREY ROGERS
JACQUELINE ROGERS

FILED

2021 JUN 17 AM 10:46

BETSY HARRELL
CO & PROBATE CLERK
BENTON COUNTY, AR

IN THE MATTER OF ANNEXING TO THE CITY
OF BENTONVILLE, ARKANSAS CERTAIN TERRITORY
CONTIGUOUS TO SAID CITY NO. _____

PETITION FOR ANNEXATION – 100 % OF OWNERS PETITIONING

DATE: 6-9-2021

Come now the undersigned petitioners, and state as follows:

1. That we, owning 100% of the property in the following described area, do hereby petition, pursuant to A.C.A. §14-40-609, the City Council of Bentonville, Arkansas, to annex the following lands to the City of Bentonville, Arkansas.

Refer to Exhibit "A"

2. We further state that this petition is signed by one hundred percent (100%) of the real estate owners owning one hundred percent (100%) of the acreage in said area and that the area to be annexed does not contain property whose owners do not wish to have their property annexed.

3. That said property description herein is contiguous to and adjoining the present City of Bentonville city limits, as shown on the map attached hereto as Exhibit "B".

4. That no enclaves will be created if this petition is accepted and the territory annexed into the City of Bentonville.

5. That the following schedule of services shall be extended to the area by the City of Bentonville within three (3) years after the date the annexation becomes final:

All properties annexed into the City of Bentonville are provided with Police, Fire and EMS services.

Additional services such as water and sewer may be provided if readily available. Such services are provided in accordance with existing ordinances and terms of service, including but not limited to the payment of required fees, the necessary permits, inspections and approvals.

FILED
2021 JUN 17 AM 10:16
BETSY HARRELL
CIR & PROBATE CLERK
BENTON COUNTY, AR

6. That a letter or title opinion from a certified abstractor or title company verifying that the petitioners are all owners of record of the relevant property or properties is attached hereto as Exhibit "C" and is made part of this petition as if set out word for word herein.

7. That a letter or verification from a certified surveyor or engineer verifying that the relevant property or properties are contiguous with the City of Bentonville and that no enclaves will be created if the property or properties are accepted by the City of Bentonville is attached hereto as Exhibit "D" and is made part of this petition as if set out word for word herein.

8 That each of the undersigned persons executing this petition has confirmed by their signature a desire that their property, which is included in the property described above, be annexed into the City of Bentonville.

FILED

2021 JUN 17 AM 10:46

BETSY HARRELL
BENTON COUNTY, AR

I confirm my desire that property owned by me, which is to be included in a petition to annex property, be annexed into the City of Bentonville.

If the property being annexed is owned jointly, I attest that all owners of the property are signing a copy of this confirmation.

If the property is owned by a trust, I attest either that I have the authority to sign this confirmation on behalf of the trust, or that all persons required to do so by the trust are signing a copy of this confirmation.

If the property is owned by a corporation, limited liability company or other entity I attest either that I have the authority to sign this confirmation on behalf of the entity, or that all persons required to do so by the entity's governing documents are signing a copy of this confirmation.

[redacted] Jeffrey J. Rogers

Legal Representative of Property Owner, Petitioner

Title, if applicable (i.e. Trustee, (Managing Member, President, Secretary)

18-08140-004

Parcel number of property to be annexed

ACKNOWLEDGMENT

jjrogers3@live.com

State of Arkansas)
) ss.
County of Benton)

On this the 9TH day of JUNE, 2021, before me, the undersigned officer, personally appeared JEFFREY J. ROGERS, known to me (or satisfactorily proven) to be the person whose name is subscribed above and acknowledged and attested that it was executed for the purposes therein apparent.

[redacted]

NOTARY PUBLIC

My Commission Expires:

5/24/2026

JANICE E. HOPKINS NOTARY PUBLIC ARKANSAS BENTON COUNTY 12348330 EXPIRES 5-24-2026

FILED
2021 JUN 17 AM 10:46
BETSY HARRELL
CO & PROBATE CLERK
BENTON COUNTY, AR

I confirm my desire that property owned by me, which is to be included in a petition to annex property, be annexed into the City of Bentonville.

If the property being annexed is owned jointly, I attest that all owners of the property are signing a copy of this confirmation.

If the property is owned by a trust, I attest either that I have the authority to sign this confirmation on behalf of the trust, or that all persons required to do so by the trust are signing a copy of this confirmation.

If the property is owned by a corporation, limited liability company or other entity I attest either that I have the authority to sign this confirmation on behalf of the entity, or that all persons required to do so by the entity's governing documents are signing a copy of this confirmation.

[redacted] Owner

Legal Representative of Property Owner, Petitioner

Title, if applicable (i.e. Trustee, (Managing Member, President, Secretary)

18-08140-004

Parcel number of property to be annexed

ACKNOWLEDGMENT

State of Arkansas)
Washington)
County of ~~Benton~~) ss.

On this the 9th day of June, 2021, before me, the undersigned officer, personally appeared Jacqueline Rogers, known to me (or satisfactorily proven) to be the person whose name is subscribed above and acknowledged and attested that it was executed for the purposes therein apparent.

[redacted]

My Commission Expires:

Sep 28, 2025

JAKE D HOWE
Arkansas - Washington County
Notary Public - Comm. # 12695686
My Commission Expires Sep 28, 2025

FILED
2021 JUN 17 AM 10:47
CO & PROBATE CLERK
BENTON COUNTY, AR

I confirm my desire that property owned by me, which is to be included in a petition to annex property, be annexed into the City of Bentonville.

If the property being annexed is owned jointly, I attest that all owners of the property are signing a copy of this confirmation.

If the property is owned by a trust, I attest either that I have the authority to sign this confirmation on behalf of the trust, or that all persons required to do so by the trust are signing a copy of this confirmation.

If the property is owned by a corporation, limited liability company or other entity I attest either that I have the authority to sign this confirmation on behalf of the entity, or that all persons required to do so by the entity's governing documents are signing a copy of this confirmation.

[redacted]

Legal Representative of Property Owner, Petitioner

COUSINS, JIMMY L. & PHYLLIS

Title, if applicable (i.e. Trustee, (Managing Member, President, Secretary)

18-09342-000

Parcel number of property to be annexed

ACKNOWLEDGMENT

State of Arkansas)
) ss.
County of Benton)

On this the 9TH day of JUNE, 2021, before me, the undersigned officer, personally appeared Jimmy Cousins, known to me (or satisfactorily proven) to be the person whose name is subscribed above and acknowledged and attested that it was executed for the purposes therein apparent.

[redacted]

NOTARY PUBLIC

My Commission Expires:

5-2-2031

LINDA MAYE ALLEN
NOTARY PUBLIC
ARKANSAS
BENTON COUNTY
12381526 EXPIRES 5-2-2031

FILED

2021 JUN 17 AM 10:47

BETSY HARRELL
CIRCUIT/COUNTY CLERK
BENTON COUNTY, AR

I confirm my desire that property owned by me, which is to be included in a petition to annex property, be annexed into the City of Bentonville.

If the property being annexed is owned jointly, I attest that all owners of the property are signing a copy of this confirmation.

If the property is owned by a trust, I attest either that I have the authority to sign this confirmation on behalf of the trust, or that all persons required to do so by the trust are signing a copy of this confirmation.

If the property is owned by a corporation, limited liability company or other entity I attest either that I have the authority to sign this confirmation on behalf of the entity, or that all persons required to do so by the entity's governing documents are signing a copy of this confirmation.

[redacted] — Cousins, Jimmy L. & Phyllis

Signature of Property Owner or Legal Representative of Property Owner, Petitioner

Title, if applicable (i.e. Trustee, (Managing Member, President, Secretary)

19-09342-000

Parcel number of property to be annexed

ACKNOWLEDGMENT

State of Arkansas)
) ss.
County of Benton)

On this the 9th day of June, 2021, before me, the undersigned officer, personally appeared Phyllis Cousins, known to me (or satisfactorily proven) to be the person whose name is subscribed above and acknowledged and attested that it was executed for the purposes therein apparent.

[redacted]
NOTARY PUBLIC

My Commission Expires:

5-2-2031

LINDA MAYE ALLEN
NOTARY PUBLIC
ARKANSAS
BENTON COUNTY
12381526 EXPIRES 5-2-2031

18-08122-003
18-08125-000
ROADER COUSINS INC.

FILED
2021 JUN 17 AM 10:47
BETSY HARRELL
CO & PROBATE CLERK
BENTON COUNTY, AR

IN THE MATTER OF ANNEXING TO THE CITY
OF BENTONVILLE, ARKANSAS CERTAIN TERRITORY
CONTIGUOUS TO SAID CITY NO. _____

PETITION FOR ANNEXATION – 100 % OF OWNERS PETITIONING

DATE: 6/9/21

Come now the undersigned petitioners, and state as follows:

1. That we, owning 100% of the property in the following described area, do hereby petition, pursuant to A.C.A. §14-40-609, the City Council of Bentonville, Arkansas, to annex the following lands to the City of Bentonville, Arkansas.

Refer to Exhibit "A"

2. We further state that this petition is signed by one hundred percent (100%) of the real estate owners owning one hundred percent (100%) of the acreage in said area and that the area to be annexed does not contain property whose owners do not wish to have their property annexed.

3. That said property description herein is contiguous to and adjoining the present City of Bentonville city limits, as shown on the map attached hereto as Exhibit "B".

4. That no enclaves will be created if this petition is accepted and the territory annexed into the City of Bentonville.

5. That the following schedule of services shall be extended to the area by the City of Bentonville within three (3) years after the date the annexation becomes final:

All properties annexed into the City of Bentonville are provided with Police, Fire and EMS services.

Additional services such as water and sewer may be provided if readily available. Such services are provided in accordance with existing ordinances and terms of service, including but not limited to the payment of required fees, the necessary permits, inspections and approvals.

FILED
2021 JUN 17 AM 10:17
BETSY DARRELL
CO & PROBATE CLERK
BENTON COUNTY, AR

6. That a letter or title opinion from a certified abstractor or title company verifying that the petitioners are all owners of record of the relevant property or properties is attached hereto as Exhibit "C" and is made part of this petition as if set out word for word herein.

7. That a letter or verification from a certified surveyor or engineer verifying that the relevant property or properties are contiguous with the City of Bentonville and that no enclaves will be created if the property or properties are accepted by the City of Bentonville is attached hereto as Exhibit "D" and is made part of this petition as if set out word for word herein.

8 That each of the undersigned persons executing this petition has confirmed by their signature a desire that their property, which is included in the property described above, be annexed into the City of Bentonville.

FILED

I confirm my desire that property owned by me, which is to be included in a petition to annex property, be annexed into the City of Bentonville. 2021 JUN 17 AM 10:47

BETSY HARRELL
CO & PROBATE CLERK
BENTON COUNTY, AR

If the property being annexed is owned jointly, I attest that all owners of the property are signing a copy of this confirmation.

If the property is owned by a trust, I attest either that I have the authority to sign this confirmation on behalf of the trust, or that all persons required to do so by the trust are signing a copy of this confirmation.

If the property is owned by a corporation, limited liability company or other entity I attest either that I have the authority to sign this confirmation on behalf of the entity, or that all persons required to do so by the entity's governing documents are signing a copy of this confirmation.

[redacted] PONDER COUSINS INC. PRESIDENT

Legal Representative of Property Owner, Petitioner

Title, if applicable (i.e. Trustee, (Managing Member, President, Secretary)

18-08122-003
18-08115-000

Parcel number of property to be annexed

ACKNOWLEDGMENT

State of Arkansas)
) ss.
County of Benton)

On this the 9 day of June, 2021, before me, the undersigned officer, personally appeared Jimmy Cousins, known to me (or satisfactorily proven) to be the person whose name is subscribed above and acknowledged and attested that it was executed for the purposes therein apparent.

[redacted]

NOTARY PUBLIC

My Commission Expires:

5-2-2031

LINDA MAYE ALLEN
NOTARY PUBLIC
ARKANSAS
BENTON COUNTY
12391626 EXPIRES 5-2-2031

18-08122-001
KEVIN & MELANY COUSINS

FILED

2021 JUN 17 AM 10:47

BETSY HARRELL
CO & PROBATE CLERK
BENTON COUNTY, AR

IN THE MATTER OF ANNEXING TO THE CITY
OF BENTONVILLE, ARKANSAS CERTAIN TERRITORY
CONTIGUOUS TO SAID CITY NO. 18-08122-001

PETITION FOR ANNEXATION – 100 % OF OWNERS PETITIONING

DATE: 6/9/21

Come now the undersigned petitioners, and state as follows:

1. That we, owning 100% of the property in the following described area, do hereby petition, pursuant to A.C.A. §14-40-609, the City Council of Bentonville, Arkansas, to annex the following lands to the City of Bentonville, Arkansas.

Refer to Exhibit "A"

2. We further state that this petition is signed by one hundred percent (100%) of the real estate owners owning one hundred percent (100%) of the acreage in said area and that the area to be annexed does not contain property whose owners do not wish to have their property annexed.

3. That said property description herein is contiguous to and adjoining the present City of Bentonville city limits, as shown on the map attached hereto as Exhibit "B".

4. That no enclaves will be created if this petition is accepted and the territory annexed into the City of Bentonville.

5. That the following schedule of services shall be extended to the area by the City of Bentonville within three (3) years after the date the annexation becomes final:

All properties annexed into the City of Bentonville are provided with Police, Fire and EMS services.

Additional services such as water and sewer may be provided if readily available. Such services are provided in accordance with existing ordinances and terms of service, including but not limited to the payment of required fees, the necessary permits, inspections and approvals.

FILED
2021 JUN 17 AM 10:47
BETSY HARRELL
CO & PROBATE CLERK
BENTON COUNTY, AR

6. That a letter or title opinion from a certified abstractor or title company verifying that the petitioners are all owners of record of the relevant property or properties is attached hereto as Exhibit "C" and is made part of this petition as if set out word for word herein.

7. That a letter or verification from a certified surveyor or engineer verifying that the relevant property or properties are contiguous with the City of Bentonville and that no enclaves will be created if the property or properties are accepted by the City of Bentonville is attached hereto as Exhibit "D" and is made part of this petition as if set out word for word herein.

8 That each of the undersigned persons executing this petition has confirmed by their signature a desire that their property, which is included in the property described above, be annexed into the City of Bentonville.

FILED

2021 JUN 11 AM 10:18

BETSY HARRELL
CO & PROBATE CLERK
BENTON COUNTY, AR

I confirm my desire that property owned by me, which is to be included in a petition to annex property, be annexed into the City of Bentonville.

If the property being annexed is owned jointly, I attest that all owners of the property are signing a copy of this confirmation.

If the property is owned by a trust, I attest either that I have the authority to sign this confirmation on behalf of the trust, or that all persons required to do so by the trust are signing a copy of this confirmation.

If the property is owned by a corporation, limited liability company or other entity I attest either that I have the authority to sign this confirmation on behalf of the entity, or that all persons required to do so by the entity's governing documents are signing a copy of this confirmation.

[redacted]

Legal Representative of Property Owner, Petitioner

KEVIN J. COUSINS
MELANY B. COUSINS

Title, if applicable (i.e. Trustee, (Managing Member, President, Secretary)

18-08122-001

Parcel number of property to be annexed

ACKNOWLEDGMENT

State of Arkansas)
) ss.
County of Benton)

On this the 9 day of June, 2021, before me, the undersigned officer, personally appeared Kevin & Melany Cousins, known to me (or satisfactorily proven) to be the person whose name is subscribed above and acknowledged and attested that it was executed for the purposes therein apparent.

[redacted]

NOTARY PUBLIC

My Commission Expires:

5-2-2031

LINDA MAYE ALLEN
NOTARY PUBLIC
ARKANSAS
BENTON COUNTY
12381526 EXPIRES 5-2-2031

479-790-6861

18-08140-005
18-08140-030
USA's · THOMAS G. BETZ

FILED

2021 JUN 17 AM 10:48

BETSY HARRELL
CO & PROBATE CLERK
BENTON COUNTY, AR

IN THE MATTER OF ANNEXING TO THE CITY
OF BENTONVILLE, ARKANSAS CERTAIN TERRITORY
CONTIGUOUS TO SAID CITY NO.

PETITION FOR ANNEXATION – 100 % OF OWNERS PETITIONING

DATE: May 27, 2021

Come now the undersigned petitioners, and state as follows:

1. That we, owning 100% of the property in the following described area, do hereby petition, pursuant to A.C.A. §14-40-609, the City Council of Bentonville, Arkansas, to annex the following lands to the City of Bentonville, Arkansas.

Refer to Exhibit "A"

2. We further state that this petition is signed by one hundred percent (100%) of the real estate owners owning one hundred percent (100%) of the acreage in said area and that the area to be annexed does not contain property whose owners do not wish to have their property annexed.

3. That said property description herein is contiguous to and adjoining the present City of Bentonville city limits, as shown on the map attached hereto as Exhibit "B".

4. That no enclaves will be created if this petition is accepted and the territory annexed into the City of Bentonville.

5. That the following schedule of services shall be extended to the area by the City of Bentonville within three (3) years after the date the annexation becomes final:

All properties annexed into the City of Bentonville are provided with Police, Fire and EMS services.

Additional services such as water and sewer may be provided if readily available. Such services are provided in accordance with existing ordinances and terms of service, including but not limited to the payment of required fees, the necessary

Such services are provided in accordance with existing ordinances and terms of service, including but not limited to the payment of required fees, the necessary permits, inspections and approvals.

FILED
2021 JUN 17 AM 10:48
BETSY HARRELL
CO & PROBATE CLERK
BENTON COUNTY, AR

6. That a letter or title opinion from a certified abstractor or title company verifying that the petitioners are all owners of record of the relevant property or properties is attached hereto as Exhibit "C" and is made part of this petition as if set out word for word herein.

7. That a letter or verification from a certified surveyor or engineer verifying that the relevant property or properties are contiguous with the City of Bentonville and that no enclaves will be created if the property or properties are accepted by the City of Bentonville is attached hereto as Exhibit "D" and is made part of this petition as if set out word for word herein.

8 That each of the undersigned persons executing this petition has confirmed by their signature a desire that their property, which is included in the property described above, be annexed into the City of Bentonville.
I confirm my desire that property owned by me, which is to be included in a petition to annex property, be annexed into the City of Bentonville.

If the property being annexed is owned jointly, I attest that all owners of the property are signing a copy of this confirmation.

If the property is owned by a trust, I attest either that I have the authority to sign this confirmation on behalf of the trust, or that all persons required to do so by the trust are signing a copy of this confirmation.

If the property is owned by a corporation, limited liability company or other entity I attest either that I have the authority to sign this confirmation on behalf of the entity, or that all persons required to do so by the entity's governing documents are signing a copy of this confirmation.

[redacted] LISA & TOM BETZ

Signature of Property Owner or Legal Representative of Property Owner, President, Petitioner

Title, if applicable (i.e. Trustee, (Managing Member, Secretary)

18-08140-005

Parcel number of property to be annexed

ACKNOWLEDGMENT

State of Arkansas)
) ss.
County of Benton)

On this the 27th day of May, 2021, before me, the

undersigned officer, personally appeared Thomas Betz, known to me (or satisfactorily proven) to be the person whose name is subscribed above and acknowledged that attested that it was executed for the purposes therein apparent.

FILED

M 10: 48

RELL
CO & PROBATE CLERK
BENTON COUNTY, AR

[redacted]

NOTARY PUBLIC

My Commission Expires:

NOV. 11, 2029

KOURTNEY PHARES
Notary Public - Arkansas
Pulaski County
Commission # 12709340
My Commission Expires Nov 11, 2029

FILED
2021 JUN 17 AM 10:48
BETSY HARRELL
CO & PROBATE CLERK
BENTON COUNTY, AR

IN THE MATTER OF ANNEXING TO THE CITY
OF BENTONVILLE, ARKANSAS CERTAIN TERRITORY
CONTIGUOUS TO SAID CITY NO.

PETITION FOR ANNEXATION – 100 % OF OWNERS PETITIONING

DATE: May 27, 2021

Come now the undersigned petitioners, and state as follows:

1. That we, owning 100% of the property in the following described area, do hereby petition, pursuant to A.C.A. §14-40-609, the City Council of Bentonville, Arkansas, to annex the following lands to the City of Bentonville, Arkansas.

Refer to Exhibit "A"

2. We further state that this petition is signed by one hundred percent (100%) of the real estate owners owning one hundred percent (100%) of the acreage in said area and that the area to be annexed does not contain property whose owners do not wish to have their property annexed.

3. That said property description herein is contiguous to and adjoining the present City of Bentonville city limits, as shown on the map attached hereto as Exhibit "B".

4. That no enclaves will be created if this petition is accepted and the territory annexed into the City of Bentonville.

5. That the following schedule of services shall be extended to the area by the City of Bentonville within three (3) years after the date the annexation becomes final:

All properties annexed into the City of Bentonville are provided with Police, Fire and EMS services.

Additional services such as water and sewer may be provided if readily available.

permits, inspections and approvals.

FILED
2021 JUN 17 AM 10:48
BETSY HARRELL
CO & PROBATE CLERK
BENTON COUNTY, AR

6. That a letter or title opinion from a certified abstractor or title company verifying that the petitioners are all owners of record of the relevant property or properties is attached hereto as Exhibit "C" and is made part of this petition as if set out word for word herein.

7. That a letter or verification from a certified surveyor or engineer verifying that the relevant property or properties are contiguous with the City of Bentonville and that no enclaves will be created if the property or properties are accepted by the City of Bentonville is attached hereto as Exhibit "D" and is made part of this petition as if set out word for word herein.

8 That each of the undersigned persons executing this petition has confirmed by their signature a desire that their property, which is included in the property described above, be annexed into the City of Bentonville.
I confirm my desire that property owned by me, which is to be included in a petition to annex property, be annexed into the City of Bentonville.

If the property being annexed is owned jointly, I attest that all owners of the property are signing a copy of this confirmation.

If the property is owned by a trust, I attest either that I have the authority to sign this confirmation on behalf of the trust, or that all persons required to do so by the trust are signing a copy of this confirmation.

If the property is owned by a corporation, limited liability company or other entity I attest either that I have the authority to sign this confirmation on behalf of the entity, or that all persons required to do so by the entity's governing documents are signing a copy of this confirmation.

[redacted] LISA & TOM BETZ

Signature of Property Owner or Legal Representative of Property Owner, Petitioner

Title, if applicable (i.e. Trustee, (Managing Member, President, Secretary)

18-08140-030

Parcel number of property to be annexed

ACKNOWLEDGMENT

State of Arkansas)
) ss.
County of Benton)

On this the 27th day of May, 2021, before me, the undersigned officer, personally appeared Lisa Betz, known to me (or satisfactorily proven) to be the person whose name is subscribed above and acknowledged and attested that it was executed for the purposes therein apparent.

[redacted]ED

NOTARY PUBLIC

2021 JUN 17 AM 10:48

BETSY HARRELL
CIR & PROBATE CLERK
BENTON COUNTY, AR

My Commission Expires:

NOV. 11, 2029

KOURTNEY PHARES
Notary Public - Arkansas
Pulaski County
Commission # 12709340
My Commission Expires Nov 11, 2029

LISA BETZ
479-685-9250

FILED
2021 JUN 17 AM 10:48
BETSY HARRELL
CO & PROBATE CLERK
BENTON COUNTY, AR

Cousins Annexation
Exhibit 'A'

18-08122-001

Part of the SW ¼ of Section 2, Township 18N, Range 31W and more particularly described as follows:

Commencing at the SW Corner of said Section 2, Township 18N, Range 31W.
Thence N2°35'25"e, 75.77' to the Point of Beginning.
Thence N02°35'25"E, 1268.55';
Thence S84°57'17"E, 723.62';
Thence S38°48'13"E, 300.43';
Thence S45°19'08"W, 114.20';
Thence S44°58'05"W, 582.03';
Thence S44°47'17"W, 672.67' to the Point of Beginning.

18-08115-000

Part of Section 2, Township 18N, Range 31W and more particularly described as follows.

The NE ¼ of the NW ¼ of said Section 2, Township 18N, Range 31W.

AND

The SE ¼ of the NW ¼ of said Section 2, Township 18N, Range 31W.

AND

The West Half of the NW ¼ of the NE ¼ of said Section 2, Township 18N, Range 31W.

Less and Except

Part of the West Half of the NW ¼ of the NE ¼ of said Section 2, Township 18N, Range 31W and more particularly described as follows:

Beginning at the NW Corner of said West Half of the NW ¼ of the NE ¼ of said Section 2, Township 18N, Range 31W;
Thence S90°00'00"E, 305.00';
Thence S01°20'18"W, 170.00';
Thence N90°00'00"W, 305.00';
Thence N01°20'18"E, 170.00' to the Point of Beginning.

FILED

2021 JUN 17 AM 10:48

BETSY HARRELL
CO & PROBATE CLERK
BENTON COUNTY, AR

18-09342-000

The SE ¼ of the SW ¼ of Section 35, Township 19N, Range 31W.

18-08122-003

The SW ¼ of the NW ¼ of Section 2, Township 18N, Range 31W.

18-08140-005

Part of the NE ¼ of the SE ¼ of Section 3, Township 18N, Range 31W and more particularly described as follows:

Beginning at the NE Corner of said NE ¼ of the SE ¼ of Section 3, Township 18N, Range 31W;

Thence S02°36'03"W, 661.84';
Thence S89°05'38"W, 61.90';
Thence N28°07'57"W, 253.06';
Thence N85°29'58"W, 239.63';
Thence N03°33'59"E, 447.22';
Thence S86°27'07"E, 423.13' to the Point of Beginning.

18-08140-030

Part of the NE ¼ of the SE ¼ of Section 3, Township 18N, Range 31W and more particularly described as follows:

Commencing at the NE Corner of said NE ¼ of the SE ¼ of Section 3, Township 18N, Range 31W;
Thence S86°27'07"W, 423.13';
Thence S03°33'59"W, 447.22' to the Point of Beginning.

Thence S16°46'24"E, 441.55';
Thence N61°41'29"E, 51.58';
Thence N49°51'21"E, 242.50';
Thence N28°07'57"W, 253.06';
Thence N85°29'58"W, 239.63' to the Point of Beginning.

FILED

2021 JUN 17 AM 10:48

BETSY HARRELL
CO & PROBATE CLERK
BENTON COUNTY, AR

18-08140-004

Part of the NE ¼ of the SE ¼ of Section 3, Township 18N, Range 31W and more particularly described as follows:

Commencing at the NE Corner of said NE ¼ of the SE ¼ of Section 3, Township 18N, Range 31W; Thence S02°36'03"W, 661.84' to the Point of Beginning;

Thence S02°36'04"W, 659.53';
Thence N86°27'36"W, 378.07';
Thence N08°22'36"W, 367.12';
Thence N61°41'14"E, 242.57';
Thence N49°51'36"E, 242.56';
Thence N89°05'38"E, 61.90' to the Point of Beginning.

FILED
2021 JUN 17 AM 10:48
BETSY HARRELL
CO & PROBATE CLERK
BENTON COUNTY, AR

Cousins Annexation
Exhibit 'A'
ROW to be Maintained by Bentonville

Part of the NE ¼ of the SE ¼ of Section 3, Township 18N, Range 31W and more particularly described as follows:

Commencing at the NE Corner of said NE ¼ of the SE ¼ of Section 3, Township 18N, Range 31W;
Thence S02°36'03"W, 661.84';
Thence S89°10'37"W, 61.79';
Thence S49°51'36"W, 242.56';
Thence S61°39'22"W, 51.66' to the Point of Beginning.

Thence S61°41'44"W, 190.91';
Thence N28°18'46"W, 20.00';
Thence N61°41'14"E, 190.91';
Thence S28°18'46"E, 20.03' to the Point of Beginning.

ROW to be Maintained by Bentonville

Part of the SW ¼ of the SE ¼ and Part of the NW ¼ of the NE ¼ of Section 35, Township 19N, Range 31W and more particularly described as follows:

Beginning at the SW Corner of said SW ¼ of the SE ¼;
Thence N02°21'03"E, 20.00';
Thence S87°35'34"E, 306.69';
Thence S02°18'21"W, 40.00';
Thence N87°35'34"W, 306.88';
Thence N02°48'08"E, 20.00' to the Point of Beginning.

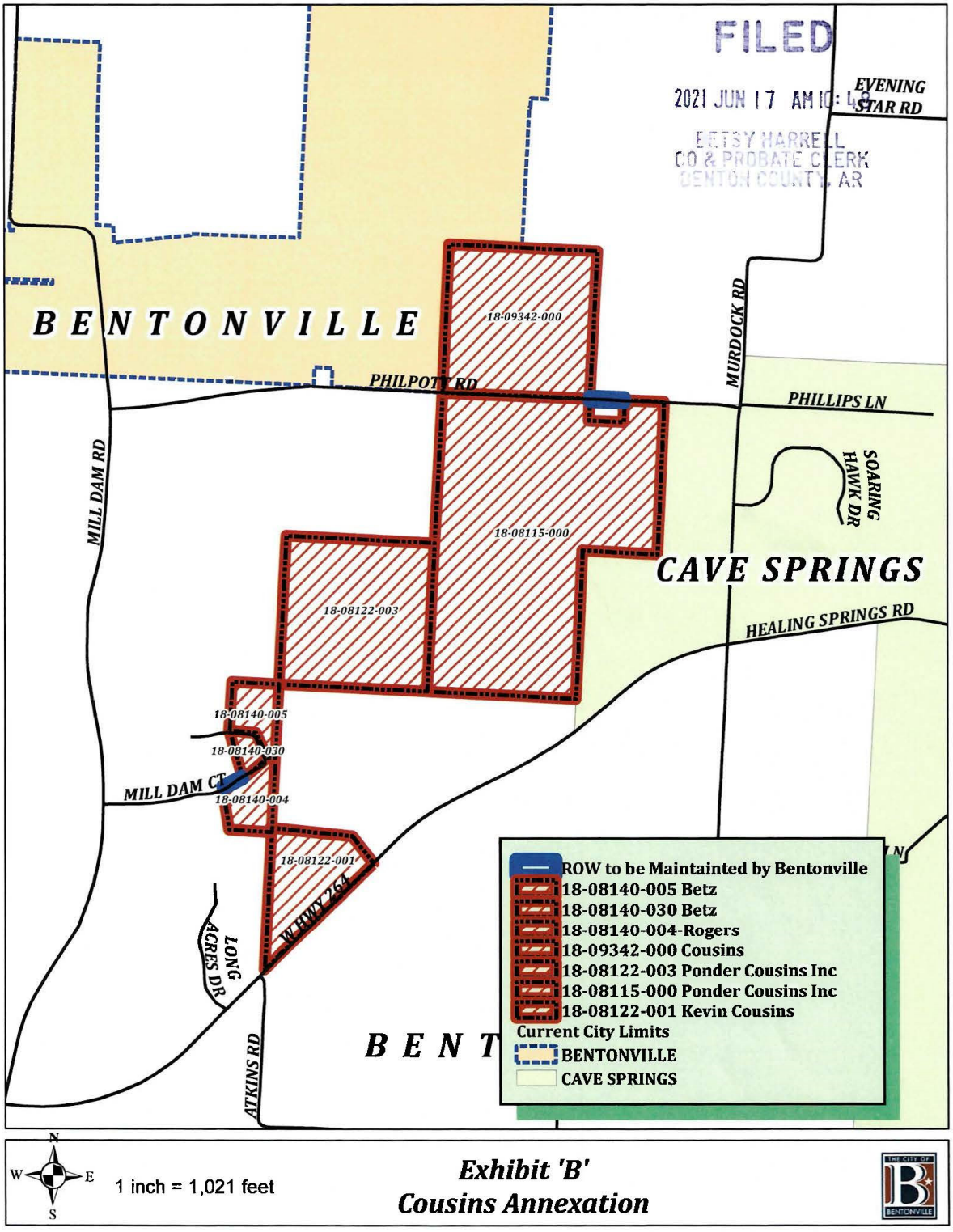
FILED
2021 JUN 17 AM 10:48
BETSY HARRELL
CO & PROBATE CLERK
BENTON COUNTY, AR
EVENING STAR RD
BENTONVILLE
18-09342-000
MURDOCK RD
PHILPOTT RD
PHILLIPS LN
MILL DAM RD
SOARING HAWK DR
18-08115-000
CAVE SPRINGS
18-08122-003
HEALING SPRINGS RD
18-08140-005
18-08140-030
MILL DAM CT
18-08140-004
18-08122-001
W HWY 264
LONG ACRES DR
ATKINS RD
ROW to be Maintainted by Bentonville
18-08140-005 Betz
18-08140-030 Betz
18-08140-004-Rogers
18-09342-000 Cousins
18-08122-003 Ponder Cousins Inc
18-08115-000 Ponder Cousins Inc
18-08122-001 Kevin Cousins
Current City Limits
BENTONVILLE
CAVE SPRINGS
N
W
E
S
1 inch = 1,021 feet
Exhibit 'B'
Cousins Annexation

EXHIBIT "C"

Benton
216 W Sevier Street
Benton, AR 72015

Bentonville
300 SW 28th Street
Bentonville, AR 72712

Eureka Springs
70 S. Main Street, Suite 2
Eureka Springs, AR 72632

Fayetteville
1420 Augustine Lane, Suite 1
Fayetteville, AR 72703

Sheridan
206 N Rose Street
Sheridan, AR 72150

First National Title Company

Headquarters
First National Title Company
Little Rock
415 N McKinley Street Suite 1200
Little Rock, AR 72205

Faulkner County Title Company
A Division of
First National Title Company
Conway
711 Locust Street
Conway, AR 72034

Greenbrier
8 Wilson Lane Road, Suite A
Greenbrier, AR 72058

Little Rock Title Company
A Division of
First National Title Company
Little Rock
3005 W. Markham Street #100
Little Rock, AR 72201

FILED
2021 JUN 17 AM 10:50
BETSY HARRELL
CO & PROBATE CLERK
BENTON COUNTY, AR

June 15, 2021

Greetings,

This letter is given in connection with what is understood to be an effort to voluntarily annex certain real property into the City of Bentonville. Based on our review, we verify that the persons listed in Exhibit C-1 to this letter are all the owners of record of the real property described in Exhibit C-2 to this letter.

Sincerely,

[redacted]

Steve Pangle

Benton County Manager

First National Title

FILED
2021 JUN 17 AM 10:50
BETSY HARRELL
CO & PROBATE CLERK
BENTON COUNTY, AR

Cousins Annexation
EXHIBIT "C-1"

Rogers, Jeffrey & Jacqueline ____ **18-08140-004**

Cousins, Jimmy L. & Phyllis ____ **18-09342-000**

Ponder Cousins, Inc. ____ **18-08122-003**

Ponder Cousins, Inc. ____ **18-08115-000**

Cousins, Kevin J. & Melany ____ **18-08122-001**

Betz, Thomas G. & Lisa D. ____ **18-08140-005**

Betz, Thomas G. & Lisa D. ____ **18-08140-030**

FILED
2021 JUN 17 AM 10: 50
BETSY HARRELL
CO & PROBATE CLERK
BENTON COUNTY, AR

Cousins Annexation
Exhibit 'C-2'

18-08122-001

Part of the SW ¼ of Section 2, Township 18N, Range 31W and more particularly described as follows:

Commencing at the SW Corner of said Section 2, Township 18N, Range 31W.
Thence N2°35'25"e, 75.77' to the Point of Beginning.
Thence N02°35'25"E, 1268.55';
Thence S84°57'17"E, 723.62';
Thence S38°48'13"E, 300.43';
Thence S45°19'08"W, 114.20';
Thence S44°58'05"W, 582.03';
Thence S44°47'17"W, 672.67' to the Point of Beginning.

18-08115-000

Part of Section 2, Township 18N, Range 31W and more particularly described as follows.

The NE ¼ of the NW ¼ of said Section 2, Township 18N, Range 31W.

AND

The SE ¼ of the NW ¼ of said Section 2, Township 18N, Range 31W.

AND

The West Half of the NW ¼ of the NE ¼ of said Section 2, Township 18N, Range 31W.

Less and Except

Part of the West Half of the NW ¼ of the NE ¼ of said Section 2, Township 18N, Range 31W and more particularly described as follows:

Beginning at the NW Corner of said West Half of the NW ¼ of the NE ¼ of said Section 2, Township 18N, Range 31W;
Thence S90°00'00"E, 305.00';
Thence S01°20'18"W, 170.00';
Thence N90°00'00"W, 305.00';
Thence N01°20'18"E, 170.00' to the Point of Beginning.

FILED
2021 JUN 17 AM 10:50
BETSY HARRELL
CO & PROBATE CLERK
BENTON COUNTY, AR

18-09342-000

The SE ¼ of the SW ¼ of Section 35, Township 19N, Range 31W.

18-08122-003

The SW ¼ of the NW ¼ of Section 2, Township 18N, Range 31W.

18-08140-005

Part of the NE ¼ of the SE ¼ of Section 3, Township 18N, Range 31W and more particularly described as follows:

Beginning at the NE Corner of said NE ¼ of the SE ¼ of Section 3, Township 18N, Range 31W;

Thence S02°36'03"W, 661.84';
Thence S89°05'38"W, 61.90';
Thence N28°07'57"W, 253.06';
Thence N85°29'58"W, 239.63';
Thence N03°33'59"E, 447.22';
Thence S86°27'07"E, 423.13' to the Point of Beginning.

18-08140-030

Part of the NE ¼ of the SE ¼ of Section 3, Township 18N, Range 31W and more particularly described as follows:

Commencing at the NE Corner of said NE ¼ of the SE ¼ of Section 3, Township 18N, Range 31W;
Thence S86°27'07"W, 423.13';
Thence S03°33'59"W, 447.22' to the Point of Beginning.

Thence S16°46'24"E, 441.55';
Thence N61°41'29"E, 51.58';
Thence N49°51'21"E, 242.50';
Thence N28°07'57"W, 253.06';
Thence N85°29'58"W, 239.63' to the Point of Beginning.

FILED
2021 JUN 17 AM 10: 51
BETSY HARRELL
CO. CIRCUIT CLERK
BENTON COUNTY, AR

18-08140-004

Part of the NE ¼ of the SE ¼ of Section 3, Township 18N, Range 31W and more particularly described as follows:

Commencing at the NE Corner of said NE ¼ of the SE ¼ of Section 3, Township 18N, Range 31W;
Thence S02°36'03"W, 661.84' to the Point of Beginning;

Thence S02°36'04"W, 659.53';
Thence N86°27'36"W, 378.07';
Thence N08°22'36"W, 367.12';
Thence N61°41'14"E, 242.57';
Thence N49°51'36"E, 242.56';
Thence N89°05'38"E, 61.90' to the Point of Beginning.

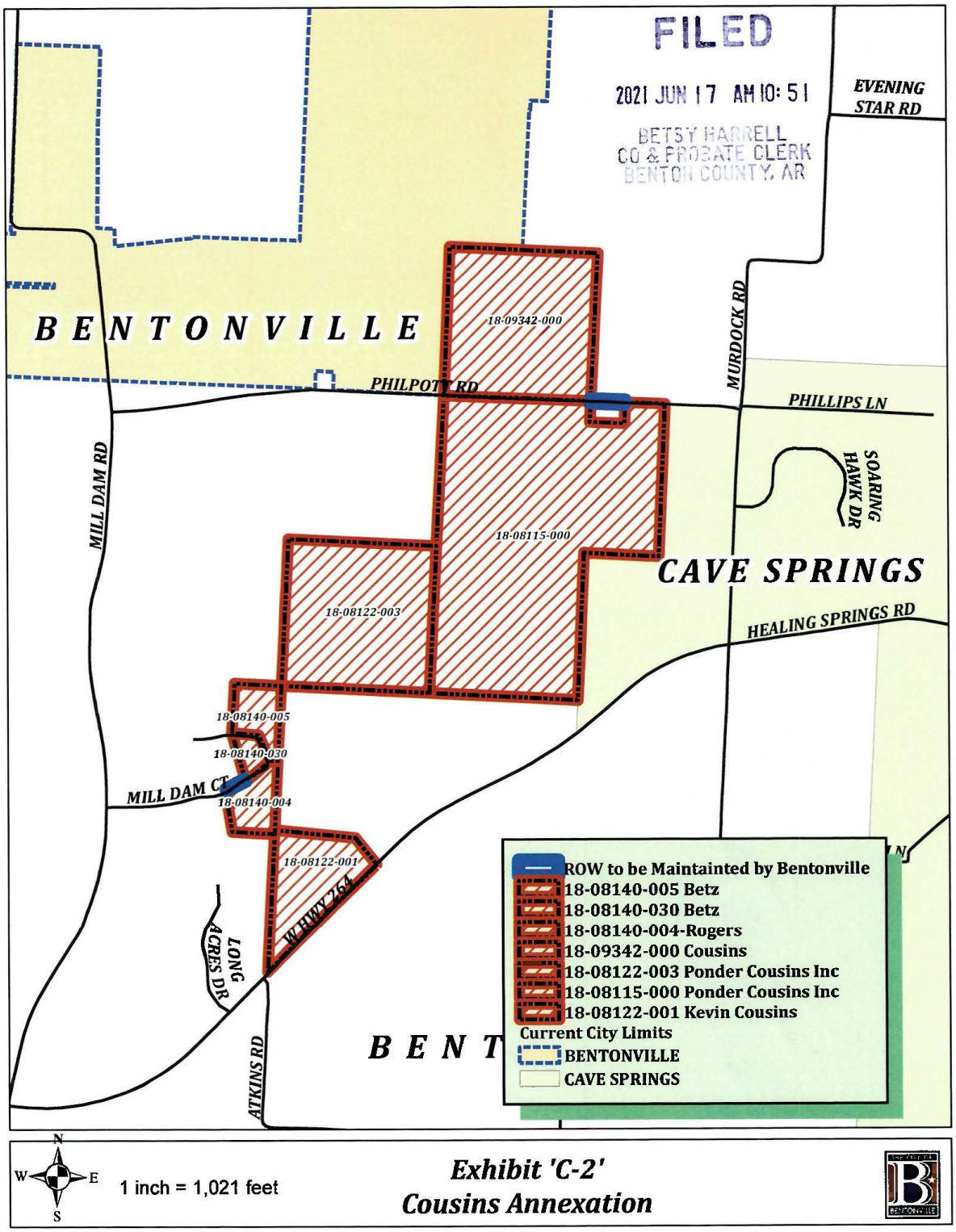
FILED
2021 JUN 17 AM 10: 51
BETSY HARRELL
CO & PROBATE CLERK
BENTON COUNTY, AR
EVENING STAR RD
BENTONVILLE
18-09342-000
MURDOCK RD
PHILPOTT RD
PHILLIPS LN
MILL DAM RD
SOARING HAWK DR
18-08115-000
CAVE SPRINGS
18-08122-003
HEALING SPRINGS RD
18-08140-005
18-08140-030
MILL DAM CT
18-08140-004
18-08122-001
W HWY 264
LONG ACRES DR
ATKINS RD
ROW to be Maintainted by Bentonville
18-08140-005 Betz
18-08140-030 Betz
18-08140-004-Rogers
18-09342-000 Cousins
18-08122-003 Ponder Cousins Inc
18-08115-000 Ponder Cousins Inc
18-08122-001 Kevin Cousins
Current City Limits
BENTONVILLE
CAVE SPRINGS
N
W
E
S
1 inch = 1,021 feet
Exhibit 'C-2'
Cousins Annexation

FILED

2021 JUN 17 AM 10:51

BERNI HARRELL
CIRCUIT/CHANCERY CLERK
BENTON COUNTY, AR

Greetings:

This letter is given in connection with what is understood to be an effort to voluntarily annex certain real property (Cousins Annexation) into the City of Bentonville. I am a licensed Professional Engineer in the State of Arkansas. Based on my review, I verify that the real property described in Exhibit D-1 to this letter is contiguous with the City of Bentonville and that no enclaves will be created if the described property is accepted by the City of Bentonville.

Sincerely,

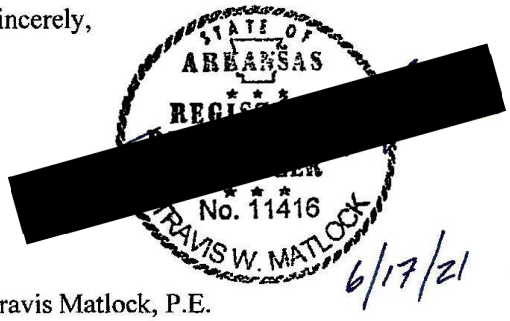

6/17/21

Travis Matlock, P.E.

FILED
2021 JUN 17 AM 10:51
BETSY HARRELL
CO & PROBATE CLERK
BENTON COUNTY, AR

Cousins Annexation
Exhibit 'D-1'

18-08122-001

Part of the SW ¼ of Section 2, Township 18N, Range 31W and more particularly described as follows:

Commencing at the SW Corner of said Section 2, Township 18N, Range 31W.
Thence N2°35'25"e, 75.77' to the Point of Beginning.
Thence N02°35'25"E, 1268.55';
Thence S84°57'17"E, 723.62';
Thence S38°48'13"E, 300.43';
Thence S45°19'08"W, 114.20';
Thence S44°58'05"W, 582.03';
Thence S44°47'17"W, 672.67' to the Point of Beginning.

18-08115-000

Part of Section 2, Township 18N, Range 31W and more particularly described as follows.

The NE ¼ of the NW ¼ of said Section 2, Township 18N, Range 31W.

AND

The SE ¼ of the NW ¼ of said Section 2, Township 18N, Range 31W.

AND

The West Half of the NW ¼ of the NE ¼ of said Section 2, Township 18N, Range 31W.

Less and Except

Part of the West Half of the NW ¼ of the NE ¼ of said Section 2, Township 18N, Range 31W and more particularly described as follows:

Beginning at the NW Corner of said West Half of the NW ¼ of the NE ¼ of said Section 2, Township 18N, Range 31W;
Thence S90°00'00"E, 305.00';
Thence S01°20'18"W, 170.00';
Thence N90°00'00"W, 305.00';
Thence N01°20'18"E, 170.00' to the Point of Beginning.

FILED
2021 JUN 17 AM 10: 51
BETSY HARRELL
CO & PROBATE CLERK
BENTON COUNTY, AR

18-09342-000

The SE ¼ of the SW ¼ of Section 35, Township 19N, Range 31W.

18-08122-003

The SW ¼ of the NW ¼ of Section 2, Township 18N, Range 31W.

18-08140-005

Part of the NE ¼ of the SE ¼ of Section 3, Township 18N, Range 31W and more particularly described as follows:

Beginning at the NE Corner of said NE ¼ of the SE ¼ of Section 3, Township 18N, Range 31W;

Thence S02°36'03"W, 661.84';
Thence S89°05'38"W, 61.90';
Thence N28°07'57"W, 253.06';
Thence N85°29'58"W, 239.63';
Thence N03°33'59"E, 447.22';
Thence S86°27'07"E, 423.13' to the Point of Beginning.

18-08140-030

Part of the NE ¼ of the SE ¼ of Section 3, Township 18N, Range 31W and more particularly described as follows:

Commencing at the NE Corner of said NE ¼ of the SE ¼ of Section 3, Township 18N, Range 31W;
Thence S86°27'07"W, 423.13';
Thence S03°33'59"W, 447.22' to the Point of Beginning.

Thence S16°46'24"E, 441.55';
Thence N61°41'29"E, 51.58';
Thence N49°51'21"E, 242.50';
Thence N28°07'57"W, 253.06';
Thence N85°29'58"W, 239.63' to the Point of Beginning.

FILED

2021 JUN 17 AM 10: 51

PEGGY HARRELL
CO & PROBATE CLERK
BENTON COUNTY, AR

18-08140-004

Part of the NE ¼ of the SE ¼ of Section 3, Township 18N, Range 31W and more particularly described as follows:

Commencing at the NE Corner of said NE ¼ of the SE ¼ of Section 3, Township 18N, Range 31W;
Thence S02°36'03"W, 661.84' to the Point of Beginning;

Thence S02°36'04"W, 659.53';
Thence N86°27'36"W, 378.07';
Thence N08°22'36"W, 367.12';
Thence N61°41'14"E, 242.57';
Thence N49°51'36"E, 242.56';
Thence N89°05'38"E, 61.90' to the Point of Beginning.

FILED
2021 JUN 17 AM 10: 51
BETSY HARRELL
CO & PROBATE CLERK
BENTON COUNTY, AR

Cousins Annexation
Exhibit 'D-1'
ROW to be Maintained by Bentonville

Part of the NE ¼ of the SE ¼ of Section 3, Township 18N, Range 31W and more particularly described as follows:

Commencing at the NE Corner of said NE ¼ of the SE ¼ of Section 3, Township 18N, Range 31W;
Thence S02°36'03"W, 661.84';
Thence S89°10'37"W, 61.79';
Thence S49°51'36"W, 242.56';
Thence S61°39'22"W, 51.66' to the Point of Beginning.

Thence S61°41'44"W, 190.91';
Thence N28°18'46"W, 20.00';
Thence N61°41'14"E, 190.91';
Thence S28°18'46"E, 20.03' to the Point of Beginning.

ROW to be Maintained by Bentonville

Part of the SW ¼ of the SE ¼ and Part of the NW ¼ of the NE ¼ of Section 35, Township 19N, Range 31W and more particularly described as follows:

Beginning at the SW Corner of said SW ¼ of the SE ¼;
Thence N02°21'03"E, 20.00';
Thence S87°35'34"E, 306.69';
Thence S02°18'21"W, 40.00';
Thence N87°35'34"W, 306.88';
Thence N02°48'08"E, 20.00' to the Point of Beginning.

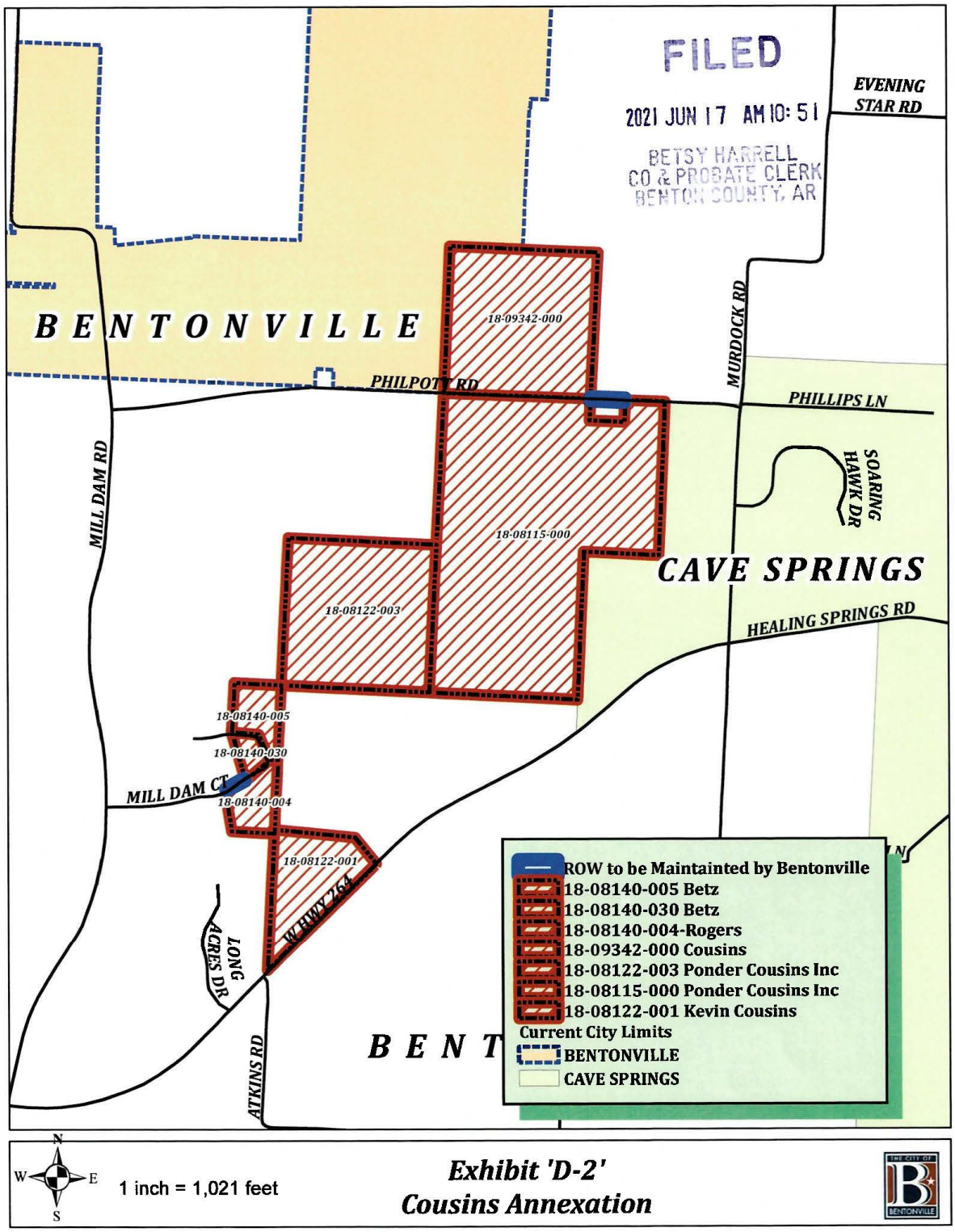
FILED
2021 JUN 17 AM 10:51
BETSY HARRELL
CO & PROBATE CLERK
BENTON COUNTY, AR
EVENING STAR RD
BENTONVILLE
18-09342-000
MURDOCK RD
PHILPOTT RD
PHILLIPS LN
MILL DAM RD
SOARING HAWK DR
18-08115-000
CAVE SPRINGS
18-08122-003
HEALING SPRINGS RD
18-08140-005
18-08140-030
MILL DAM CT
18-08140-004
18-08122-001
W HWY 264
LONG ACRES DR
ATKINS RD
ROW to be Maintainted by Bentonville
18-08140-005 Betz
18-08140-030 Betz
18-08140-004-Rogers
18-09342-000 Cousins
18-08122-003 Ponder Cousins Inc
18-08115-000 Ponder Cousins Inc
18-08122-001 Kevin Cousins
Current City Limits
BENTONVILLE
CAVE SPRINGS
N
W
E
S
1 inch = 1,021 feet
Exhibit 'D-2'
Cousins Annexation

FILED
2021 JUN 17 AM 10:52
BETSY TRAMMELL
CO & PROBATE CLERK
BENTON COUNTY, AR

Department of Transformation and Shared Services
Governor Asa Hutchinson
Secretary Amy Fecher
Director Shelby Johnson

June 15, 2021

Mr. Jim Wheeless
GIS Coordinator – City of Bentonville
305 SW A Street
Bentonville, AR 72712

RE: City of Bentonville Annexation Coordination Requirement

Mr. Wheeless,

Thank you for coordinating with our office as you seek to annex property into the City of Bentonville, AR located in Section 35, Township 19 North, Range 31 West and Sections 2 & 3, Township 18 North, Range 31 West and described as the "Cousins" Annexation. This letter represents confirmation that you have coordinated with our office (Arkansas GIS Office) as specified in *§ 14-40-101* (Act 914 of 2015) of the 90th General Assembly.

Our office will wait completion of any additional steps necessary for the proposed boundary change, which normally comes from the Arkansas Secretary of State Elections Division after any appropriate filing by your County Clerk.

Sincerely,

[redacted]

Thomas Melton, GIS Analyst

Attachments:
GIS Office Map of Proposed Annexation
Legal Description
Secretary of State Municipal Change Checklist

H:\City_Annexations\Cities\Bentonville\20210615\Doc\20210615_Bentonville_Annexation_Coordination_Letter.docx

Arkansas Geographic Information Systems
501 Woodlane Street, Suite G04 * Little Rock, AR 72201 * 501.682.2767
TRANSFORM.AR.GOV

FILED
2021 JUN 17 AM 10: 52
BETSY HARRELL
CO & PROBATE CLERK
BENTON COUNTY, AR

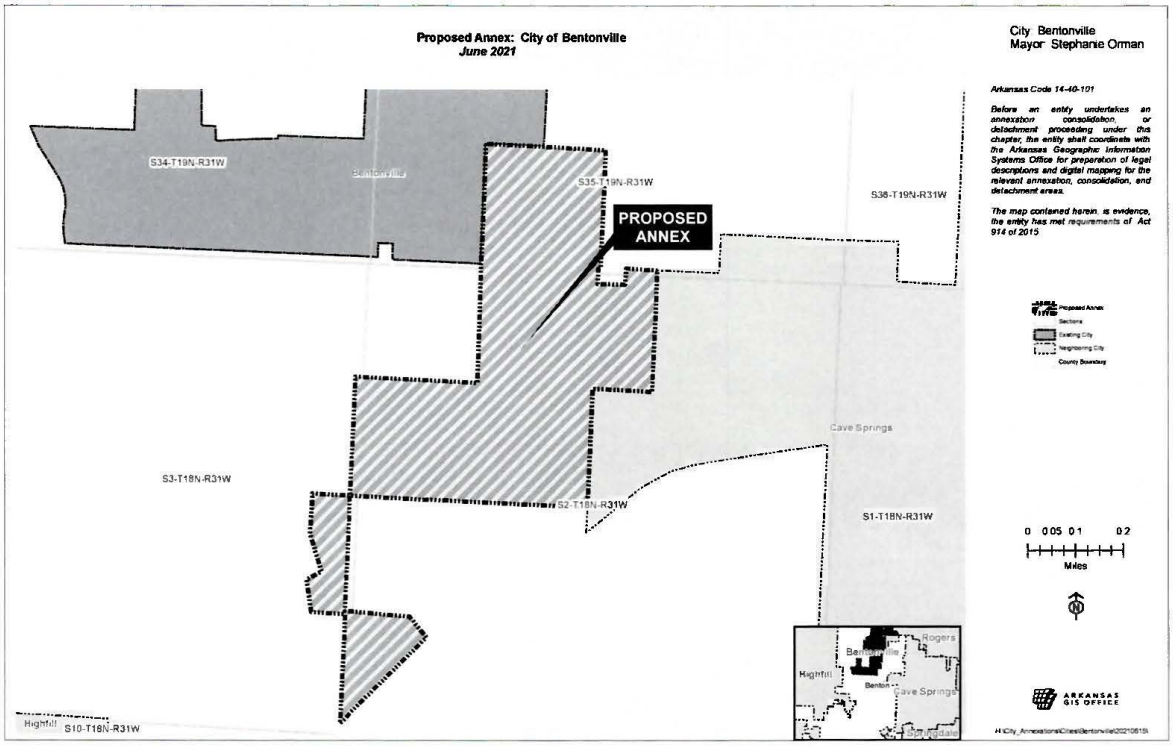

FILED

2021 JUN 17 AM 10:52

BETSY HARRELL
CO & PROBATE CLERK
BENTON COUNTY, AR

Cousins Annexation
Exhibit 'A'

18-08122-001

Part of the SW ¼ of Section 2, Township 18N, Range 31W and more particularly described as follows:

Commencing at the SW Corner of said Section 2, Township 18N, Range 31W.
Thence N2°35'25"e, 75.77' to the Point of Beginning.
Thence N02°35'25"E, 1268.55';
Thence S84°57'17"E, 723.62';
Thence S38°48'13"E, 300.43';
Thence S45°19'08"W, 114.20';
Thence S44°58'05"W, 582.03';
Thence S44°47'17"W, 672.67' to the Point of Beginning.

18-08115-000

Part of Section 2, Township 18N, Range 31W and more particularly described as follows.

The NE ¼ of the NW ¼ of said Section 2, Township 18N, Range 31W.

AND

The SE ¼ of the NW ¼ of said Section 2, Township 18N, Range 31W.

AND

The West Half of the NW ¼ of the NE ¼ of said Section 2, Township 18N, Range 31W.

Less and Except

Part of the West Half of the NW ¼ of the NE ¼ of said Section 2, Township 18N, Range 31W and more particularly described as follows:

Beginning at the NW Corner of said West Half of the NW ¼ of the NE ¼ of said Section 2, Township 18N, Range 31W;
Thence S90°00'00"E, 305.00';
Thence S01°20'18"W, 170.00';
Thence N90°00'00"W, 305.00';
Thence N01°20'18"E, 170.00' to the Point of Beginning.

FILED

2021 JUN 17 AM 10:52

BETSY HARRELL
CO & PROBATE CLERK
BENTON COUNTY, AR

18-09342-000

The SE ¼ of the SW ¼ of Section 35, Township 19N, Range 31W.

18-08122-003

The SW ¼ of the NW ¼ of Section 2, Township 18N, Range 31W.

18-08140-005

Part of the NE ¼ of the SE ¼ of Section 3, Township 18N, Range 31W and more particularly described as follows:

Beginning at the NE Corner of said NE ¼ of the SE ¼ of Section 3, Township 18N, Range 31W;

Thence S02°36'03"W, 661.84';
Thence S89°05'38"W, 61.90';
Thence N28°07'57"W, 253.06';
Thence N85°29'58"W, 239.63';
Thence N03°33'59"E, 447.22';
Thence S86°27'07"E, 423.13' to the Point of Beginning.

18-08140-030

Part of the NE ¼ of the SE ¼ of Section 3, Township 18N, Range 31W and more particularly described as follows:

Commencing at the NE Corner of said NE ¼ of the SE ¼ of Section 3, Township 18N, Range 31W;
Thence S86°27'07"W, 423.13';
Thence S03°33'59"W, 447.22' to the Point of Beginning.

Thence S16°46'24"E, 441.55';
Thence N61°41'29"E, 51.58';
Thence N49°51'21"E, 242.50';
Thence N28°07'57"W, 253.06';
Thence N85°29'58"W, 239.63' to the Point of Beginning.

FILED
2021 JUN 17 AM 10: 52
BETSY HARRELL
CO & PROBATE CLERK
BENTON COUNTY, AR

18-08140-004

Part of the NE ¼ of the SE ¼ of Section 3, Township 18N, Range 31W and more particularly described as follows:

Commencing at the NE Corner of said NE ¼ of the SE ¼ of Section 3, Township 18N, Range 31W; Thence S02°36'03"W, 661.84' to the Point of Beginning;

Thence S02°36'04"W, 659.53';
Thence N86°27'36"W, 378.07';
Thence N08°22'36"W, 367.12';
Thence N61°41'14"E, 242.57';
Thence N49°51'36"E, 242.56';
Thence N89°05'38"E, 61.90' to the Point of Beginning.

Arkansas Secretary of State
John Thurston Arkansas Secretary of State, 500 Woodlane Ave, Little Rock, AR 72201-1094

Municipal Boundary Change Checklist

Act 655 of 2017 and A.C.A. §14-40-103

County:_____ **City/Town:** _____

City Ordinance/Resolution No:_____ **Date approved:** _____

County Court Case No:_____ **Date Order Filed:** _____

Type: _____

(Choose from the list of Arkansas Code Sections located on the back)

Date Change Effective: _____ Set by: ○Municipal Ordinance ○Emergency Clause ○Court ○Default
(Required by Act 655 of 2017)

For Circuit Court Challenge: Date Order Filed: _____ ○Upheld ○Overturned ○ Other *(attach explanation*

Please indicate which ward(s) the territory will be assigned to: _____
(See A.C.A § 14-40-203)

Initiating party:

○All Landowners ○Majority Landowners ○Municipal Governing Body ○State ○Other_____

Supporting Documentation attached *(check all that apply)*:

- ☐ File marked copy of City Ordinance/Resolution ***(required)***
- ☐ File marked copy of County Court Order or certified annexation election results ***(required** except for A.C.A. §14-40-501)*
- ☐ Copy of Arkansas GIS approved printed map and certification letter ***(required)***
- ☐ Proof of Publication for all Legal Notices *(include Hearing, Election, and City Ordinance/Resolution notices)*
- ☐ File marked copy of Petition Part *(if applicable)*
- ☐ File marked copy of Complaint and final Circuit Court Order (*Court Challenge only)*

Municipal Contact:

Name:_____ Title: _____

Street Address: _____

City:_____ St:_____ Zip code: _____

Complete one form per ordinance/resolution, attach it as a cover page to the supporting document set and submit to the County Clerk's Office within 45 days of the Effective Date as required by Act 655 of 2017

County Official:

Signature:_____ Title: _____

Date: _____

Pursuant to Act 655 of 2017, County Officials must submit a file-marked copy of municipal boundary change documents within 30 days of receipt to: Arkansas Secretary of State, Attn: Municipal Boundary Filing, 500 Woodlane Ave Suite 256, Little Rock, AR 72201-1094

Office of the Arkansas Secretary of State use only

Received by: _____

Rev. 2/2019

Municipal Annexation, Detachment, and Incorporation Reference

Annexation of Territories Contiguous to County Seat A.C.A §14-40-201

Annexation of Territories in another Judicial District (multiple county seats) A.C.A. §14-40-202

Annexation of City Park or Airport (automatic) A.C.A §14-40-204

Annexation of building on boundary of two municipalities (written notice) A.C.A. §14-40-207

Annexation by Election (contiguous land) A.C.A. §14-40-302

Annexation of land in adjoining County A.C.A §14-40-401

Annexation of surrounded unincorporated area (island/doughnut holes) by ordinance A.C.A. §14-40-501

Annexation by Petition of majority of Landowners A.C.A. §14-40-602

Annexation by Petition of all Landowners A.C.A §14-40-609

Consolidation of two municipalities by Election A.C.A §14-40-1201

Annexation with Detachment from another municipality at landowner request A.C.A §14-40-2001

Annexation with Detachment from adjoining city at city request A.C.A §14-40-2101

Detachment of Land annexed by petition under §14-40-601 A.C.A §14-40-608

Detachment of municipal lands back to County by election A.C.A. §14-40-1801

Detachment of unsuitable land by municipal resolution A.C.A §14-40-1901

Incorporation by direct petition of landowners A.C.A §14-38-101

Incorporation by petition for special election A.C.A §14-38-115

Surrender of Charter (Disincorporation) by second class city A.C.A §14-39-101

City Council Agenda Items

For City Council Meeting of June 22, 2021
From the June 15, 2021 Planning Commission Meeting

1. Ordinance changing real estate from R-1, Single-Family Residential to DN-1, Downtown Low-Density Residential, 403 SW E Street, RZ20-0062.

The Planning Commission voted 6-0, recommending approval.

The Downtown Neighborhood Subarea Plan of the Bentonville Community Plan depicts this property within a High Density Residential Character Area (p. 135). The Neighborhood Framework model depicted in the plan (p.137) defines High Density Residential Areas as areas immediately adjacent to the Downtown Core and Gateway Corridors, and plan for the highest density and range of housing types.

The Future Land Use Map currently depicts this property as Low-Density Residential. These areas typically include detached single-family residential properties and amenities for residents, including neighborhood parks, places of worship, etc.

2. Ordinance changing real estate from R-E, Residential Estate to R-1, Single-Family Residential, 1402 NW 12th Street, RZ20-0032.

The Planning Commission voted 6-0, recommending approval.

The Future Land Use Map currently depicts this property as Low-Density Residential. These areas typically include detached single-family residential properties and amenities for residents, including neighborhood parks, places of worship, etc.

3a. Resolution adopting revision to the Future Land Use Map changing real estate from Agricultural to Low-Density Residential, Amazing Land Company, LLC, 9207 South Morning Star Road.

The Planning Commission voted 6-0, recommending approval.

The Future Land Use Plan currently depicts this property as Agricultural. Agricultural areas include larger properties used primarily for the raising of crops or livestock. These properties may include residence and farm-related structures.

While all of the surrounding properties have a Future Land Use Plan designation of Agricultural, the actual uses of the properties to the east and west are recently developed single-family subdivisions.

3b. Ordinance changing real estate from A-1, Agricultural to R-1, Single-Family Residential, 9207 South Morning Star Road, RZ21-0034.

The Planning Commission voted 6-0, recommending approval.

The Future Land Use Plan currently depicts this property as Agricultural. Agricultural areas include larger properties used primarily for the raising of crops or livestock. These properties may include residence and farm-related structures.

While all of the surrounding properties have a Future Land Use Plan designation of Agricultural, the actual uses of the properties to the east and west are recently developed single-family subdivisions.

4. Ordinance accepting a Property Line Adjustment: Lot 22 of Lefor's Addition, Mark Melton Construction, Inc., LLC, NW 2nd Street, R-1, Single-Family Residential, *PLA21-0019.*

The Planning Commission voted 6-0, recommending approval.

A Property Line Adjustment of existing Lot 1 of Lefor's Addition, creating new Lot 22, (+/0.22 acres) of Lefor's Addition. The plat dedicates 2.5 feet of additional right-of-way along NW 2nd Street.

5. Ordinance accepting a lot split of Lots 11, 12, 13, and 14 of East Side 1st Addition, Pinnacle Villas LLC, 1004 & 1006 SE 3rd Street, D-2, Downtown Medium Density Residential.

The Planning Commission voted 6-0, recommending approval.

A Lot Split of existing Lots 1 & 2 creating new Lot 11 (+/0.15 acres), Lot 12 (+/-0.14 acres), Lot 13 (+/-0.14 acres), and Lot 14 (+/-0.14 acres) of East Side 1st Addition. The plat dedicates various public utility easements to serve the newly created lots. Per the requirements of the Master Street, the plat also dedicates additional right-of-way for SE 3rd Street. Access to all lots shall be achieved through a single ingress/egress point conveyed by a private access easement onto SE 3rd Street allowing each home to be rear loaded by a garage.

RC-2
R-1
R-1
R-1
RC-2
RC-2
R-1
DN-1
R-2
SW GLOVER ST
SW 4TH ST
DN-2
SW E ST
R-1
R-1
SW GILMORE ALY
SW D ST
R-1
R-2
DN-2
RC-2
RC-2
DN-2
DN-2
SW 5TH ST
Legend
Pending Planning Commission Items
DN-2
D-E
D-E
N
W
E
S
1 inch = 100 feet
RZ20-0062
REZONING R-1 TO DN-1
COFFELT ADDITION
LOTS 1 & 2 BLOCK 1
THE CITY OF
BENTONVILLE

Rezoning Narrative: 403 SW E Street

1. Current zoning is R-1. Proposed zoning designation is DN1.
2. Zoning change is to pursue greater design flexibility based on the irregular shape of land. You have a circular parcel with an alleyway, 4th street and E street surrounding the North, East and West side of the property.
3. Currently the surrounding area is mixed use of single-family homes and multifamily townhomes or condos.
4. The zoning change will allow for more design options when the time comes.
5. Traffic in the area has multiple ways to enter and exit and should not negatively impact the neighborhood.
6. Signage will be property address (s).
7. Appearance will be residential.
8. Water and sewer are at the street. The size of the water line is 16 inch. The size of the sewer line is 8 inch.

Disclaimer: FOR INFORMATIONAL PURPOSES ONLY.
In cases of discrepancy between the information presented here and a city ordinance, the city ordinance will prevail.

DN-1, Downtown Low Density Residential

Setback Illustration

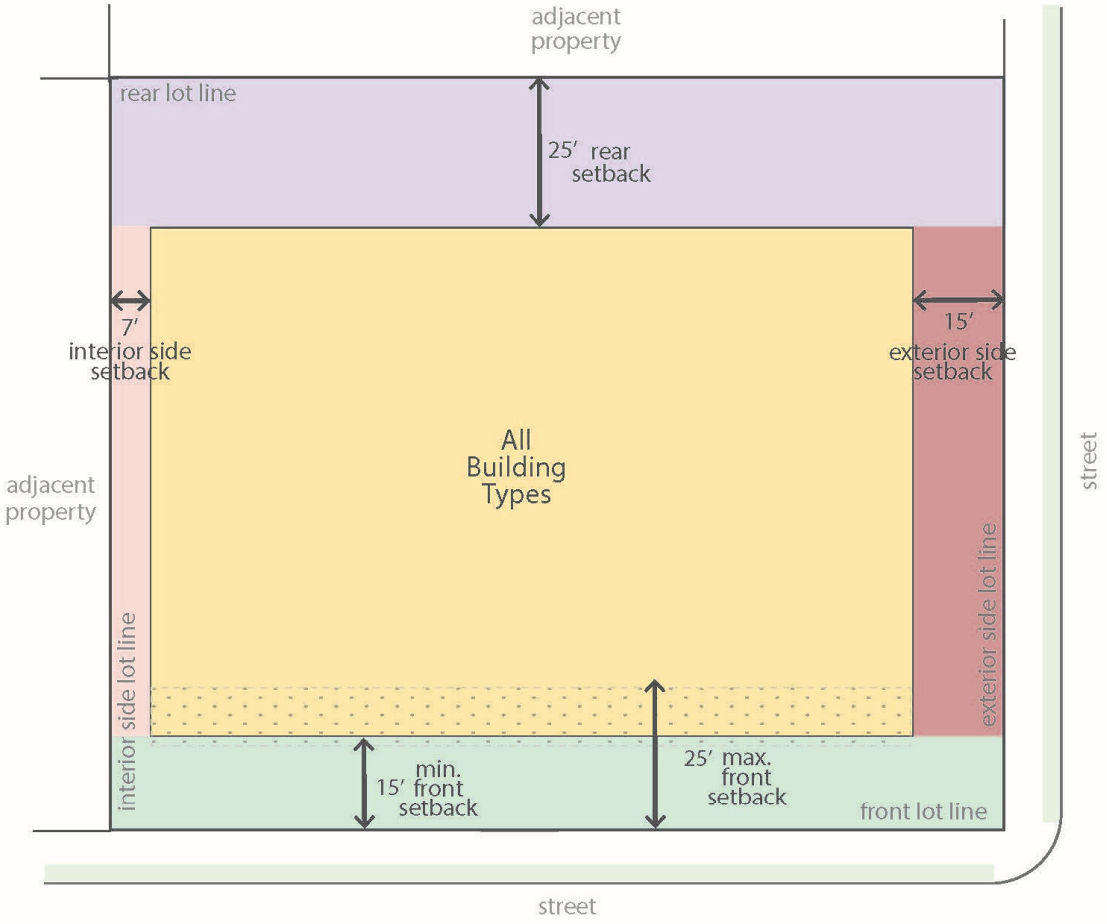

Updated May 2020

ORDINANCE NO. _____

AN ORDINANCE CHANGING REAL ESTATE IN THE CITY OF BENTONVILLE, ARKANSAS, FROM ITS PRESENT ZONING CLASSIFICATION OF R-1, SINGLE FAMILY RESIDENTIAL TO DN-1, DOWNTOWN LOW-DENSITY RESIDENTIAL (PROJECT NUMBER: RZ20-0062).

WHEREAS, Barry Kinyon duly filed a petition with the Planning Commission requesting that the hereinafter described property situated in Benton County, Arkansas, be changed from its present zoning classification of R-1, Single Family Residential to DN-1, Downtown Low-Density Residential to be used in accordance with city zoning laws and state laws, which property is described as follows:

Lot's 1 & 2, Block 1 Coffelt Addition to Bentonville, Benton County, AR as shown on Plat Record Book "A" Page 91, recorded in the Benton County Clerk's Office, Bentonville, Arkansas.; and,

WHEREAS, the Planning Commission duly met and considered the application and duly set the petition for public hearing to be held June 15, 2021 in the Council Chambers of the City of Bentonville; and,

WHEREAS, public notice of said hearing having been published in the Northwest Arkansas Democrat-Gazette for the time and in the manner required by law; and,

WHEREAS, the Planning Commission voted to recommend to the City Council that the petition be approved and that said property be rezoned from its present classification of R-1, Single Family Residential to DN-1, Downtown Low-Density Residential.

NOW THEREFORE, BE IT ORDAINED BY THE CITY COUNCIL FOR THE CITY OF BENTONVILLE, ARKANSAS:

Section 1: That the above described real property is hereby changed from its present zoning classification of R-1, Single Family Residential to DN-1, Downtown Low-Density Residential to be used in accordance with the city zoning laws and state laws.

PASSED AND APPROVED this_____ day of _____, 2021.

APPROVED:

_____
Stephanie Orman, Mayor

ATTEST:

_____
Kirby Romines, City Clerk

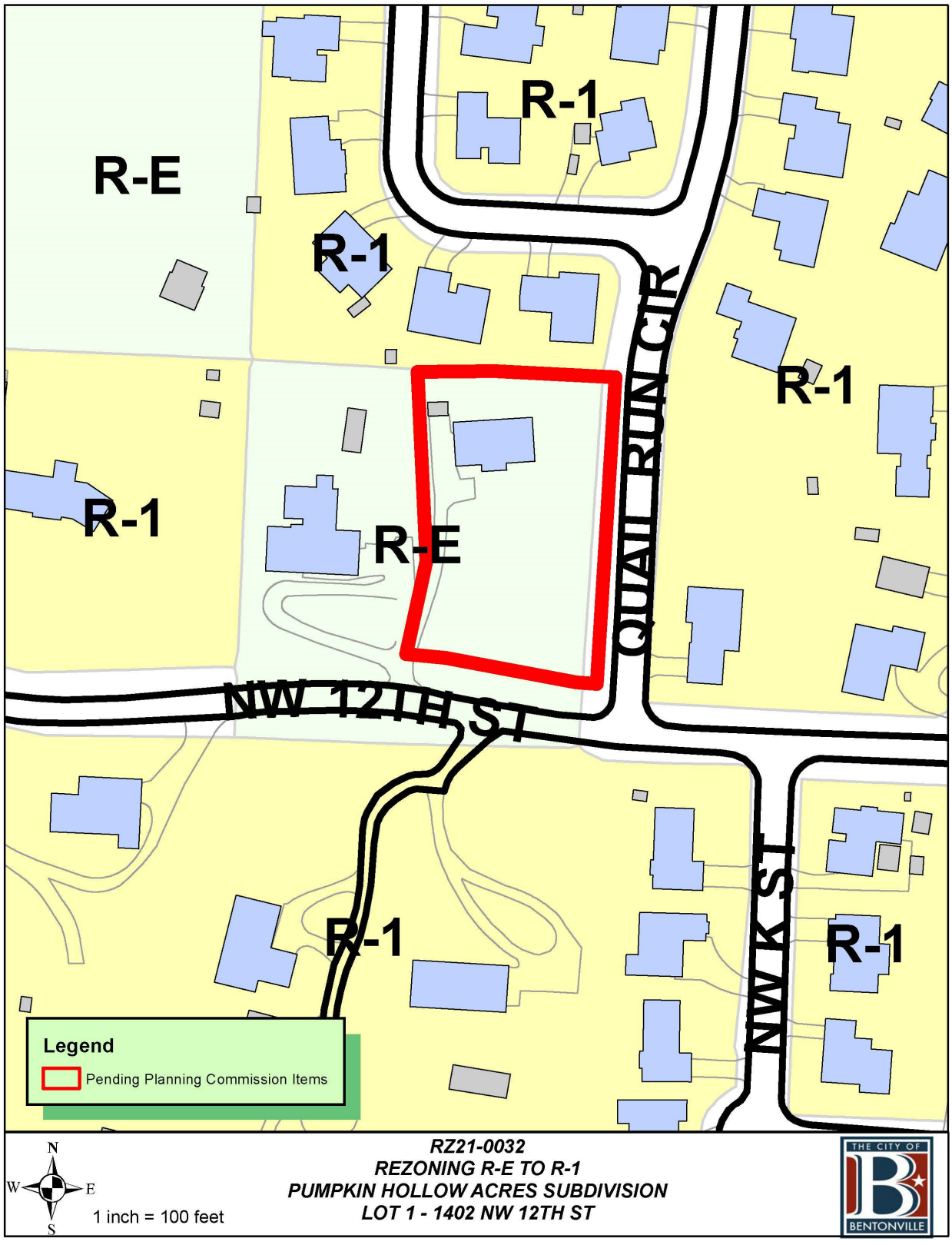
R-E
R-1
R-1
R-1
R-1
R-E
R-1
R-1
QUAIL RUN CIR
NW 12TH ST
NW K ST
Legend
Pending Planning Commission Items
N
W
E
S
1 inch = 100 feet
RZ21-0032
REZONING R-E TO R-1
PUMPKIN HOLLOW ACRES SUBDIVISION
LOT 1 - 1402 NW 12TH ST
THE CITY OF
BENTONVILLE

Narrative

- Current zoning designation
  - RE – residential estate
- Proposed zoning designation
  - R1 – residential single family
- Explanation of the proposed zoning change including current owner information and any proposed sales.
  - Zachary Paul and Chelsea Wilson are proposing to change the zoning designation of 1402 NW 12th St. Bentonville, AR 72712 from RE (residential estate) to R1 (residential single family). There will be no proposed sales associated with this zoning designation change.
- Reason for requesting zoning change
  - Zachary Paul and Chelsea Wilson intend to complete a remodel of 1402 NW 12th St. Bentonville, AR 72712 to include a garage addition to the west side of the current dwelling. With current RE zoning, the 30' setback from the west property line prohibits this addition. Rezoning to R1 will change the inner setback to 7', providing the proper clearances for the 22' wide garage addition.
- Statement of how the property will relate to surrounding properties
  - No change to how the property relates to surrounding properties
- Use
  - Single family, residential.
- Traffic
  - No change to traffic.
- Signage
  - No change to signage.
- Appearance
  - From 12th street, a 22' wide garage additional will be added on to the west (left) face of the existing dwelling.
  - From Quail Run Circle, the 44' long garage addition will span from 3' south (left) of the front face of the existing dwelling and terminate 8' beyond the north (right) rear face of the existing dwelling.
  - The garage addition will be 27' tall (10' taller than the existing dwelling).
- Availability of water and sewer (state size of lines)
  - No change to availability of water and sewer services.

ORDINANCE NO. _____

AN ORDINANCE CHANGING REAL ESTATE IN THE CITY OF BENTONVILLE, ARKANSAS, FROM ITS PRESENT ZONING CLASSIFICATION OF R-E, RESIDENTIAL ESTATE TO R-1, SINGLE FAMILY RESIDENTIAL (PROJECT NUMBER: RZ21-0032).

WHEREAS, Chelsea Wilson duly filed a petition with the Planning Commission requesting that the hereinafter described property situated in Benton County, Arkansas, be changed from its present zoning classification of R-E, Residential Estate to R-1, Single Family Residential to be used in accordance with city zoning laws and state laws, which property is described as follows:

Lot 1 Pumpkin Hollow Acres Subdivision to Bentonville, Benton County, AR as shown on Plat Record Book 11 Page 219, recorded in the Benton County Clerk's Office, Bentonville, Arkansas.; and,

WHEREAS, the Planning Commission duly met and considered the application and duly set the petition for public hearing to be held June 15, 2021 in the Council Chambers of the City of Bentonville; and,

WHEREAS, public notice of said hearing having been published in the Northwest Arkansas Democrat-Gazette for the time and in the manner required by law; and,

WHEREAS, the Planning Commission voted to recommend to the City Council that the petition be approved and that said property be rezoned from its present classification of R-E, Residential Estate to R-1, Single Family Residential.

NOW THEREFORE, BE IT ORDAINED BY THE CITY COUNCIL FOR THE CITY OF BENTONVILLE, ARKANSAS:

Section 1: That the above described real property is hereby changed from its present zoning classification of R-E, Residential Estate to R-1, Single Family Residential to be used in accordance with the city zoning laws and state laws.

PASSED AND APPROVED this_____ day of _____, 2021.

APPROVED:

_____
Stephanie Orman, Mayor

ATTEST:

_____
Kirby Romines, City Clerk

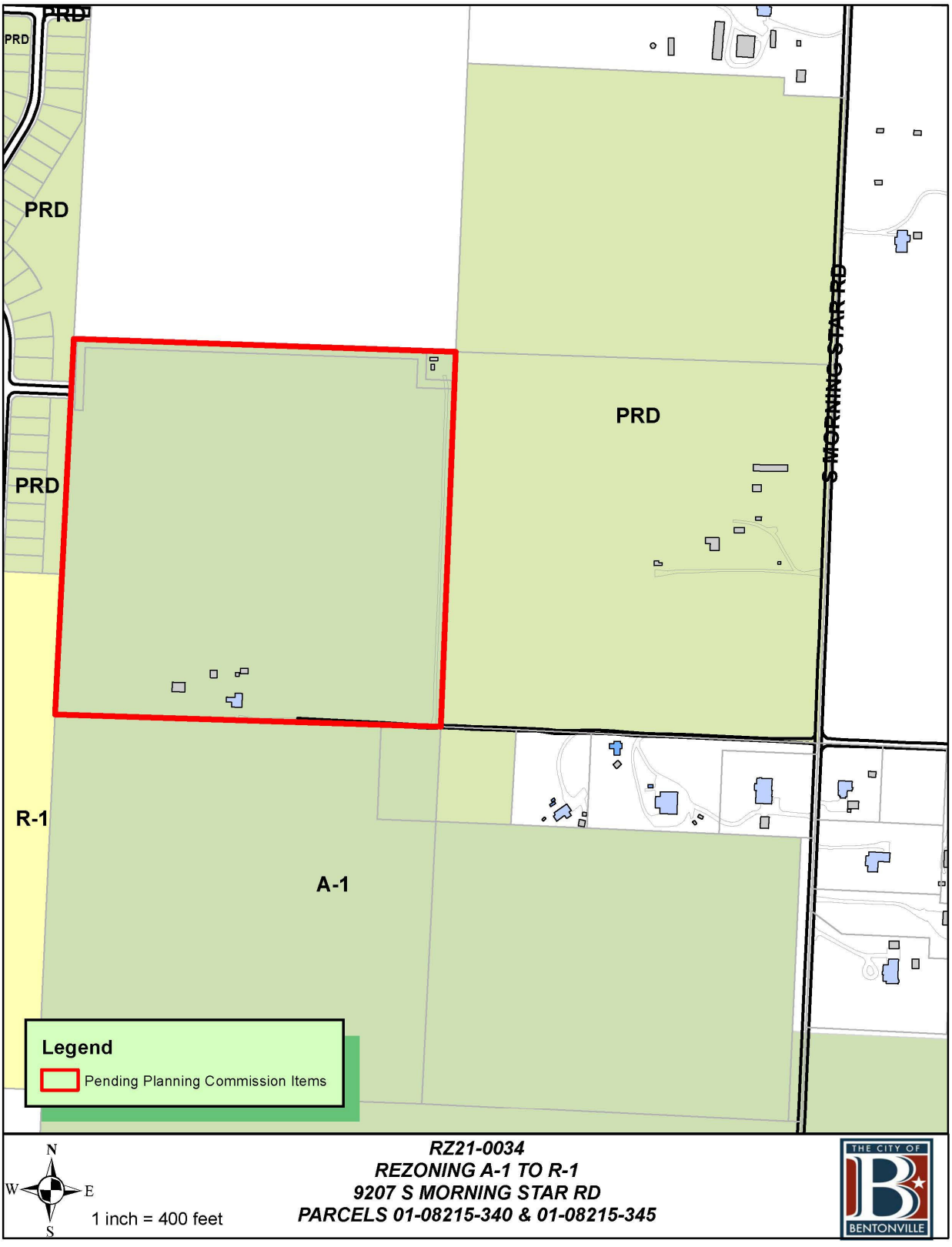
PRD
PRD
PRD
PRD
PRD
S MORNING STAR RD
R-1
A-1
Legend
Pending Planning Commission Items
N
W
E
S
1 inch = 400 feet
RZ21-0034
REZONING A-1 TO R-1
9207 S MORNING STAR RD
PARCELS 01-08215-340 & 01-08215-345
THE CITY OF
BENTONVILLE

CEI
Solutions for Land and Life

Civil Engineering, Landscape Architecture, Survey, Planning & Program Management

3108 SW Regency Parkway
Bentonville, AR 72712
Office: 479.273.9472
Toll-free: 1.800.433.4173
ceieng.com

May 10, 2021

City of Bentonville
Planning Dept.
305 SW A St.
Bentonville, AR 72712

RE: Amazing Land Company, LLC Rezoning Application

Dear Planning Commission:

Please accept this narrative letter to accompany a formal request by Amazing Land Company, LLC owner of real property located in the City of Bentonville, for consideration of a rezoning for Benton County parcels 01-08215-340 & 01-08215-345 from A-1, Agricultural District to R-1 Single Family Residential. The property is approximately 40.06 acres located between Aurora subdivision and Providence subdivision. The property is planned for development by the current owner as a single-family residential subdivision.

Pending approval of this rezoning request, a proposed development plan will be submitted later this summer addressing details of construction. It will be consistent with the allowable uses under the current city of Bentonville zoning code for the proposed district. Zoning of the subject tract as R-1 Single Family Residential use will be compatible with the surrounding single-family homes and agricultural lands.

Access to this development has been provided by extension of public streets from the adjacent subdivisions and ultimately to collector and arterial streets in the surrounding areas. An increase of traffic can be expected from the development consistent with similar single-family subdivisions in the area since the land is currently undeveloped. All necessary utilities for the proposed development are available on or by adjacent easement to the subject tract. An 8" water main exists on the property as well as several stubs from the adjacent Aurora subdivision. Access to sewer is provided by an established easement to the south which connects to the Nomad Creek Sewer Extension project nearing completion of construction and by sewer manholes installed by Aurora subdivision to the common property line.

Thank you for your time and consideration in this matter.

Respectfully submitted,
CEI Engineering Associates, Inc.

Nate Bachelor

Nate Bachelor, PE
Project Manager

RESOLUTION NO. _____

A RESOLUTION AMENDING THE CITY OF BENTONVILLE FUTURE LAND USE MAP FOR A SPECIFIC AREA FROM AGRICULTURAL TO SINGLE FAMILY RESIDENTIAL. (PROJECT NUMBER: RZ21-0034).

WHEREAS, The City of Bentonville, acted on the request of the Planning Commission that the properties depicted on Attachment A, situated in Benton County, Arkansas, be changed from their present land use classification of Agricultural to Single Family Residential on the City of Bentonville Future Land Use Map.

WHEREAS, the Planning Commission duly met and considered the application and duly set the petition for public hearing to be held June 15, 2021 at Bentonville City Hall; and,

WHEREAS, public notice of said hearing having been published in the Northwest Arkansas Democrat Gazette for the time and in the manner required by law; and,

WHEREAS, the Planning Commission voted to recommend to the City Council that the petition be approved and that said future land use classification as presented on the property be changed.

NOW THEREFORE, BE IT ORDAINED BY THE CITY COUNCIL FOR THE CITY OF BENTONVILLE, ARKANSAS:

Section 1: That the properties depicted on Attachment A are hereby changed from their present land use classification of Agricultural to Single Family Residential on the City of Bentonville Future Land Use Map.

Section 2: That this resolution shall be in full force and effect from and after the date of its passage.

PASSED AND APPROVED this _____ day of _____, 2021.

APPROVED:

_____
Stephanie Orman, Mayor

ATTEST:

_____
Kirby Romines, City Clerk

ORDINANCE NO. _____

AN ORDINANCE CHANGING REAL ESTATE IN THE CITY OF BENTONVILLE, ARKANSAS, FROM ITS PRESENT ZONING CLASSIFICATION OF A-1, AGRICULTURAL TO R-1, SINGLE FAMILY RESIDENTIAL (PROJECT NUMBER: RZ21-0034).

WHEREAS, Nate Bachelor duly filed a petition with the Planning Commission requesting that the hereinafter described property situated in Benton County, Arkansas, be changed from its present zoning classification of A-1, Agricultural to R-1, Single Family Residential to be used in accordance with city zoning laws and state laws, which property is described as follows:

The SW 1/4 of the NW 1/4 of Section 23, Township 19 North, Range 31 West, Benton County, Arkansas.;

and,

WHEREAS, the Planning Commission duly met and considered the application and duly set the petition for public hearing to be held June 15, 2021 in the Council Chambers of the City of Bentonville; and,

WHEREAS, public notice of said hearing having been published in the Northwest Arkansas Democrat-Gazette for the time and in the manner required by law; and,

WHEREAS, the Planning Commission voted to recommend to the City Council that the petition be approved and that said property be rezoned from its present classification of A-1, Agricultural to R-1, Single Family Residential.

NOW THEREFORE, BE IT ORDAINED BY THE CITY COUNCIL FOR THE CITY OF BENTONVILLE, ARKANSAS:

Section 1: That the above described real property is hereby changed from its present zoning classification of A-1, Agricultural to R-1, Single Family Residential to be used in accordance with the city zoning laws and state laws.

PASSED AND APPROVED this_____ day of _____, 2021.

APPROVED:

_____
Stephanie Orman, Mayor

ATTEST:

_____
Kirby Romines, City Clerk

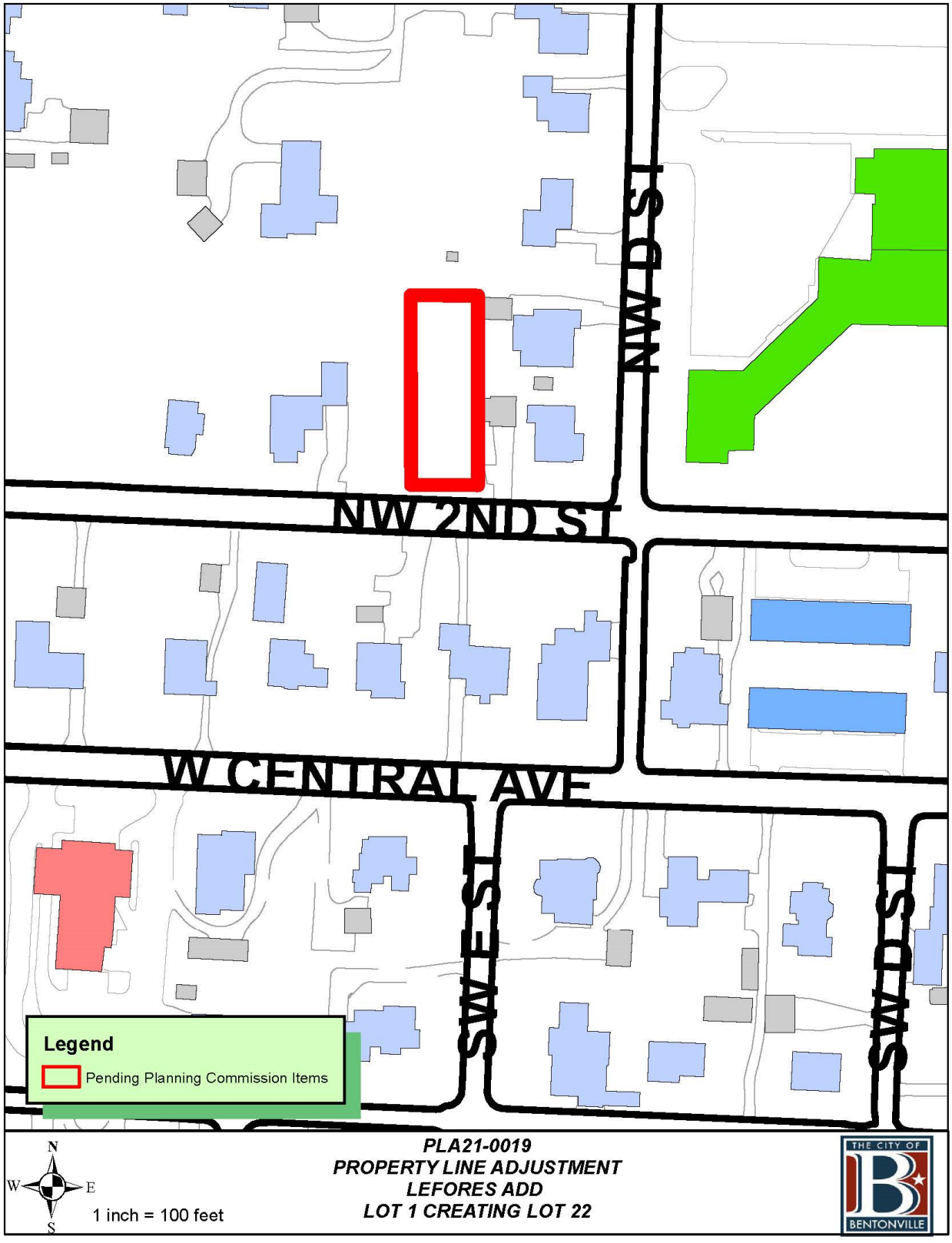
NW 2ND ST
W CENTRAL AVE
SW E ST
SW D ST
Legend
Pending Planning Commission Items
N
W
E
S
1 inch = 100 feet
PLA21-0019
PROPERTY LINE ADJUSTMENT
LEFORES ADD
LOT 1 CREATING LOT 22
THE CITY OF
BENTONVILLE

PROPERTY LINE ADJUSTMENT OF LOT 1 LEFOR'S ADDITION CREATING LOT 22

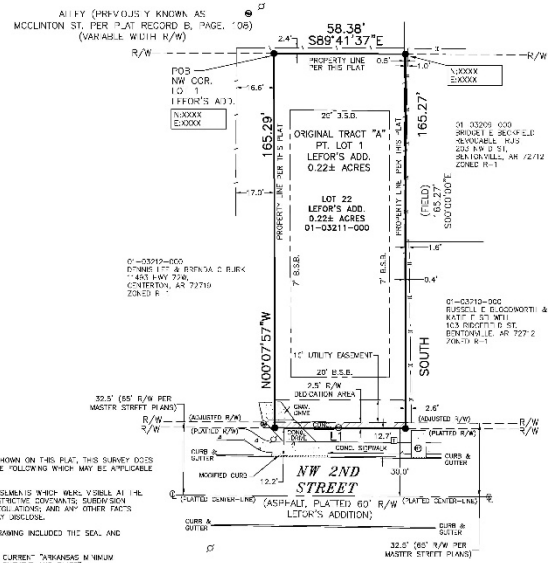

PLAT NOTES:

EXCEPT AS SPECIFICALLY STATED OR SHOWN ON THIS PLAT, THIS SURVEY DOES NOT PURPORT TO REFLECT ANY OF THE FOLLOWING WHICH MAY BE APPLICABLE TO THE SUBJECT REAL ESTATE:

EASEMENTS, OTHER THAN POSSIBLE EASEMENTS WHICH WERE VISIBLE AT THE TIME OF MAKING OF THIS SURVEY, RESTRICTIVE COVENANTS, SUBDIVISION RESTRICTIONS OR OTHER LAND USE REGULATIONS; AND ANY OTHER FACTS WHICH AN ACCURATE TITLE SEARCH MAY DISCLOSE.

THIS SURVEY IS VALID ONLY IF THE DRAWING INCLUDED THE SEAL AND SIGNATURE OF THE SURVEYOR.

THIS SURVEY MEETS OR EXCEEDS THE CURRENT "ARKANSAS MINIMUM STANDARDS FOR PROPERTY BOUNDARY SURVEYS AND PLATS".

DECLARATION IS MADE TO THE ORIGINAL PURCHASER OF THE SURVEY. IT IS NOT TRANSFERABLE TO ADDITIONAL INSTITUTIONS OR SUBSEQUENT OWNERS.

SUBSURFACE AND ENVIRONMENTAL CONDITIONS WERE NOT EXAMINED OR CONSIDERED AS A PART OF THIS SURVEY.

SETBACKS SHALL BE PER THE CURRENT ZONING DISTRICT AS STATED IN THE MOST RECENT CITY OF BENTONVILLE ZONING CODE.

BEFORE ANY WORK IN THE RIGHT-OF-WAY COMMENCES, CONTRACTOR AND/OR OWNER IS TO OBTAIN RIGHT-OF-WAY PERMIT FROM THE CITY OF BENTONVILLE TRANSPORTATION DEPARTMENT.

OWNER/DEVELOPER SHALL COORDINATE WITH ALL LOCAL UTILITY COMPANIES TO ENSURE THAT EACH LOT HAS WATER, SEWER AND ELECTRIC SERVICE.

SIDEWALKS SHALL BE THE RESPONSIBILITY OF THE BUILDER/OWNER AT TIME OF BUILDING PERMIT ISSUANCE.

THERE MAY NOT BE FENCES OR ANY OTHER STRUCTURES BUILT IN ANY DRAINAGE EASEMENTS.

ALL STRUCTURES MUST MAINTAIN MINIMUM OF 20' CLEARANCES FROM ALL ELECTRIC LINES.

OWNER TO CONTACT NEW SERVICE COORDINATOR (271-3139) TO DISCUSS ELECTRIC SERVICE PRIOR TO BEGINNING ANY CONSTRUCTION. FAILURE TO CONTACT BUD PRIOR TO CONSTRUCTION WILL RESULT IN DELAYS TO GET ELECTRIC SERVICE.

BUD'S STANDARD PRACTICE IS TO PLACE UNDERGROUND EQUIPMENT (TRANSFORMERS, SECONDARY PEDESTALS, JUNCTION BOXES, ETC) ON THE LOT LINE OF A DEVELOPMENT. ANY ADJUSTMENTS TO THE PROPERTY LINE THAT RESULT IN OUR EQUIPMENT NOT BEING ON THE LOT LINE WILL REQUIRE THE DEVELOPER TO PAY FOR THE COST OF BUD TO RELOCATE THE EQUIPMENT TO THE LOT LINE.

IT IS THE RESPONSIBILITY OF THE DEVELOPER TO COORDINATE WITH THE NEW SERVICE COORDINATOR AT 479 271-3139 TO DETERMINE IF EQUIPMENT IS IN CONFLICT.

IT IS THE RESPONSIBILITY OF THE DEVELOPER TO PAY FOR ANY COSTS ASSOCIATED WITH MOVING OF EQUIPMENT. THIS INCLUDES BUT IS NOT LIMITED TO ANY COSTS ASSOCIATED WITH LOSS OF EQUIPMENT (WIRE AND ELBOWS) AND LABOR AND MATERIAL TO MOVE THE EQUIPMENT TO THE NEW LOT LINE.

LINE	BEARING	DISTANCE
L1	N89°42'28"W	58.00'

OWNER/DEVELOPER: MARK MELTON CONSTRUCTION, INC.
MWELTONCONSTRUCTION@YAHOO.COM
(479) 903-3106

ADDRESS: 604 NW 2ND STREET
BENTONVILLE, ARKANSAS

ZONING: (R-1) SINGLE FAMILY RESIDENTIAL

VICINITY MAP

PLA21-2019

CERTIFICATE OF OWNERSHIP:

WE THE UNDERSIGNED, OWNERS OF THE REAL ESTATE SHOWN AND DESCRIBED HEREIN, DO HEREBY CERTIFY THAT WE HAVE LAID OFF, PLATTED, SUBDIVIDED AND DO HEREBY LAY OFF, PLAT, SUBDIVIDE SAID REAL ESTATE IN ACCORDANCE WITH THIS PLAT AND DO HEREBY DEDICATE TO THE USE OF THE PUBLIC THE STREETS, ALLEYS, DRIVES, EASEMENTS, ETC. AS SHOWN ON SAID PLAT.

DATE OF EXECUTION: _____

SIGNED: _____

NAME AND ADDRESS: _____

PRINT NAME: _____

SOURCE OF TITLE: D.R. _____

PAGE _____

CERTIFICATE OF APPROVAL:

PURSUANT TO THE BENTONVILLE LAND DEVELOPMENT REGULATIONS AND ALL OTHER CONDITIONS AND APPROVAL HAVING BEEN COMPLETED, THIS DOCUMENT IS HEREBY ACCEPTED. THIS CERTIFICATE IS HEREBY EXECUTED UNDER THE AUTHORITY OF THE SAID RULES AND REGULATIONS.

DATE OF EXECUTION: _____

SIGNED: _____
BENTONVILLE PLANNING COMMISSION CHAIRMAN

SIGNED: _____
MAYOR OF BENTONVILLE

SIGNED: _____
CITY CLERK, CITY OF BENTONVILLE

SURVEY DESCRIPTION LOT 22:

A PART OF LOT NUMBERED ONE (1), LEFOR'S ADDITION, BENTONVILLE, BENTON COUNTY, ARKANSAS, AS SHOWN ON PLAT RECORD B AT PAGE 108, AND BEING MORE PARTICULARLY DESCRIBED AS FOLLOWS: BEGINNING AT THE SOUTHWEST CORNER OF SAID LOT ONE (1), SAID POINT BEING AN EXISTING IRON REBAR; THENCE N00°07'57"W 165.29 FEET TO AN EXISTING IRON REBAR AT THE NORTHWEST CORNER OF SAID LOT ONE (1); THENCE S89°41'37"E 58.38 FEET ALONG THE NORTH LINE OF SAID LOT ONE (1) TO AN EXISTING IRON REBAR; THENCE S00°00'00"W 165.27 FEET TO AN EXISTING IRON REBAR ON THE SOUTH LINE OF SAID LOT ONE (1); THENCE N89°42'28"W 58.00 FEET TO THE POINT OF BEGINNING, CONTAINING 0.22 ACRES, MORE OR LESS.

SUBJECT TO EASEMENTS, RIGHTS-OF-WAY, AND PROTECTIVE COVENANTS OF RECORD, IF ANY. SUBJECT TO ALL PRIOR MINERAL RESERVATIONS AND OIL AND GAS LEASES.

CERTIFICATE OF SURVEYING ACCURACY:

I, ALAN REID, HEREBY CERTIFY THAT THIS PLAT CORRECTLY REPRESENTS A BOUNDARY SURVEY MADE BY ME AND BOUNDARY MARKERS AND LOT CORNERS SHOWN HEREON ACTUALLY EXIST AND THEIR LOCATION, TYPE AND MATERIAL ARE CORRECTLY SHOWN AND ALL MINIMUM REQUIREMENTS OF THE ARKANSAS MINIMUM STANDARDS FOR LAND SURVEYORS HAVE BEEN MET.

DATE OF EXECUTION: _____

SIGNED: _____
REGISTERED LAND SURVEYOR

NO. _____

STATE OF ARKANSAS

PARENT TRACT DESCRIPTION – (01-03211-000):

THE WEST 58 FEET OF LOT 1, LEFOR'S ADDITION, BENTONVILLE, BENTON COUNTY, ARKANSAS, AS SHOWN ON PLAT RECORD B AT PAGE 108.

SUBJECT TO EASEMENTS, RIGHTS-OF-WAY, AND PROTECTIVE COVENANTS OF RECORD, IF ANY. SUBJECT TO ALL PRIOR MINERAL RESERVATIONS AND OIL AND GAS LEASES.

0 30 60 90

1" = 30'

LEGEND

AC UNIT	FIBER OPTICS SIGN	SANITARY SEWER MANHOLE
BACKFLOW VALVE	FIRE HYDRANT	SATELLITE DISH
BOLLARD POST	FIRE SPRINKLER	SEPTIC TANK LID
BUGGY AXLE	FLAG POLE	SET ALUMINUM MONUMENT
CABLE BOX	GAS LINE SIGN	SET COTTON SPINDLE
CABLE TV PEDESTAL	GAS METER	SET STAKE ON LINE
CHISELED "X"	GAS STUB	SET 1/2" IRON REBAR
COMPUTED POINT	GAS REGULATOR	STATE MONUMENT
CONC. MONUMENT	GENERATOR	STONE MONUMENT
D.O.T. MONUMENT	GROUND LIGHT	STORM DRAIN MANHOLE
DOWN GUY	IRRIG. CONTROL VALVE	STREET SIGN
DRAIN GRATE	JUNCTION BOX	T-POST
ELECTRIC BOX	LAMP POST	TELEPHONE BOX
ELECTRIC METER	MAIL BOX	TELEPHONE PEDESTAL
ELECTRIC PEDESTAL	PARKING SIGN	TEMPORARY BENCHMARK
EXIST. ALUM. CAPPED MON.	PAY PHONE	TRAFFIC SIGNAL BOX
EXIST. COTTON SPINDLE	POWER POLE	TRANSFORMER BOX
EXISTING IRON PIPE	PROPANE TANK	TREE
EXISTING IRON REBAR	RAILROAD SPIKE	WATER LINE SIGN
EXISTING NAIL	READING	WATER METER
FENCE POST	RIGHT OF WAY MONUMENT	WATER SPIGOT
EXIST. IRON IN CONCRETE	SANITARY SEWER CLEANOUT	WATER VALVE

CENTERLINE ROAD	EASEMENT LINE
RIGHT-OF-WAY LINE	BUILDING SETBACK LINE
BARBED WIRE FENCE	OVERHEAD ELEC. SVC LINE
CHAIN-LINKED FENCE	UNDERGROUND ELECTRIC LINE
PRIVACY FENCE	GAS LINE
WIRE FENCE	SANITARY SEWER LINE
MAJOR CONTOUR INTERVAL	STORM SEWER LINE
MINOR CONTOUR INTERVAL	TELEPHONE LINE
BUILDING LINE	WATER LINE
FIBER OPTICS LINE	PROPERTY LINE
DITCH/WATER LINE	

SHEET 1 OF 2
SHT. NO.

REVISIONS			
DATE	DESCRIPTION	BY	
05/07/21	CITY COMMENTS	DF	

ARA
116 S. 2ND STREET AVENUE
ROGERS, ARKANSAS 72756
(479) 631-8336
FAX (479) 631-8339
www.maryhelpgroup.com

Mary Held & ASSOCIATES
PROFESSIONAL LAND SURVEYORS
BOX 4429
OPL

DRAWN BY: DF
DATE: 04/23/2021
CHECKED: —
SCALE: 1" = 30'
SHEET SIZE: 18"x 24"

MARK MELTON CONSTRUCTION, INC.
604 NW 2ND STREET
BENTONVILLE, ARKANSAS

PROPERTY LINE ADJUSTMENT– BENTONVILLE, AR.

ORDINANCE NO. _____

AN ORDINANCE ACCEPTING A PROPERTY LINE ADJUSTMENT OF LOT 1 CREATING LOT 22 TO THE CITY OF BENTONVILLE, ARKANSAS (PROJECT NUMBER: PLA21-0019).

WHEREAS, pursuant to the provisions of the Land Development Code of the Bentonville Municipal Code, the property line adjustment of Lot 1 Creating Lot 22 of LeFores Addition of the City of Bentonville, Benton County, Arkansas was submitted to the Bentonville Planning Commission on June 15, 2021; and,

WHEREAS, said property line adjustment is attached hereto as Exhibit "A"; and,

WHEREAS, the Bentonville Planning Commission considered said property line adjustment on the date stated and at other times, and voted to recommend the approval of said property line adjustment to the City Council; and,

WHEREAS, the property line adjustment of real property as described herein has been submitted to the City Council for the City of Bentonville, and after consideration and deliberation, said Council is of the opinion that said property line adjustment should be approved.

NOW THEREFORE, BE IT ORDAINED BY THE CITY COUNCIL FOR THE CITY OF BENTONVILLE, ARKANSAS:

Section 1: That the property line adjustment of Lot 1 Creating Lot 22 of LeFores Addition to the City of Bentonville, Arkansas, should be and the same is hereby accepted and approved for all purposes.

Section 2: That the Mayor and City Clerk be and are hereby authorized and directed to evidence the acceptance of said property line adjustment by certifying said acceptance on the approved property line adjustment.

PASSED AND APPROVED this_____ day of _____, 2021.

APPROVED:

_____
Stephanie Orman, Mayor

ATTEST:

_____
Kirby Romines, City Clerk

SE BRICK AVE
SE H ST
SE I ST
SE 3RD ST
SE J ST
SE 4TH ST
Legend
Pending Planning Commission Items
N
W
E
S
1 inch = 100 feet
LS21-0027
LOT SPLIT
EAST SIDE 1ST ADDITION
LOTS 1 & 2 CREATING LOTS 11-14
THE CITY OF
BENTONVILLE

LOT SPLIT OF LOTS 1 & 2, EAST SIDE 1ST ADDITION, CREATING NEW LOTS #11, #12, #13 & #14

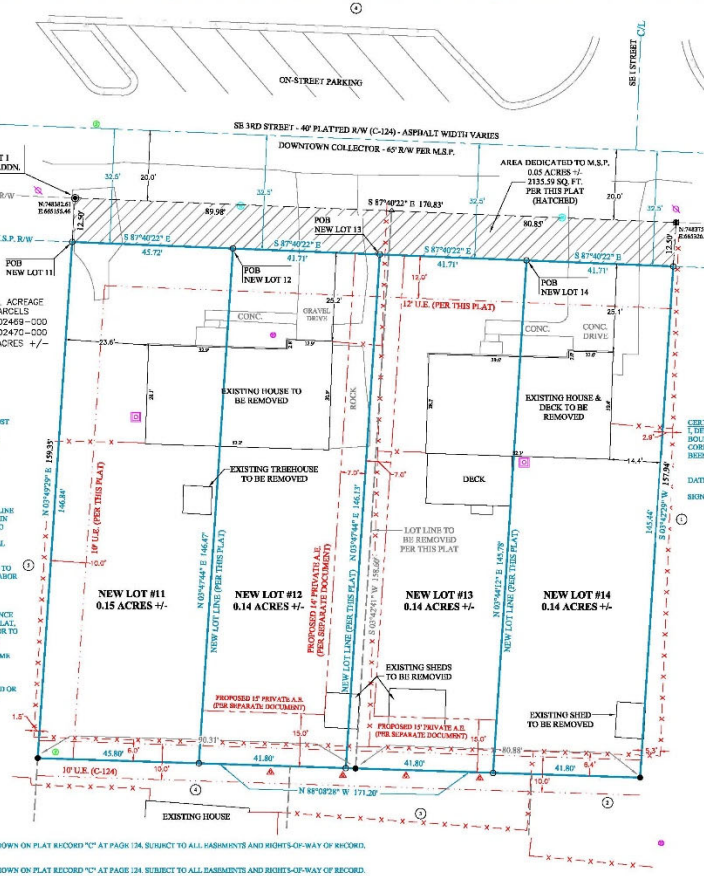

ADJACENT LAND OWNERS

1) SB STREET LLC
500 E LOOP 281 STE
B BOX 247 LONGVIEW, TX 75605
PARCEL #01-02471-000
ZONED: R-1
2) ALAN M & LINDA SELLERS
PO BOX 5445
BELLA VISTA, AR 72714-5445
PARCEL #01-02475-000
ZONED: R-1
3) THERESA PLUMLEE
1005 SAE 4TH ST
BENTONVILLE, AR 72712
PARCEL #01-02478-000
ZONED: R-1
4) GEORGE D JR & GINGER HILL
1003 SE 4TH ST
BENTONVILLE, AR 72712
PARCEL #01-02479-000
ZONED: R-1
5) JUNE M LARKIN
1002 SE 3RD ST
BENTONVILLE, AR 72712-6013
PARCEL #01-02488-000
ZONED: R-1
6) APPLEJACK LLC
SPECIALIZED REAL ESTATE GROUP
FAYETTEVILLE, AR 72701-5911
PARCEL #01-18426-000
ZONED: R-1

FIELD WORK:
APRIL 9, 2021

BASIS OF BEARING:
GPS OBSERVATION - AR NORTH ZONE

REFERENCE DOCUMENTS:
1) WARRANTY DEED FILED IN BOOK L2021 AT PAGE 07152
2) WARRANTY DEED FILED IN BOOK L2021 AT PAGE 07795
3) PLAT OF SURVEY FILED IN BOOK L2020 AT PAGE 47491.
4) PLAT OF SURVEY FILED IN BOOK L2018 AT PAGE 80010
5) PLAT OF SURVEY FILED IN BOOK 28 AT PAGE 292
6) PLAT OF SURVEY FILED IN BOOK 20 AT PAGE 67
7) FINAL PLAT OF EAST SIDE ADDITION FILED IN BOOK C AT PAGE 124

PROPERTY ZONED:
DN-3

BUILDING SETBACK NOTE:
SETBACKS SHALL BE PER THE CURRENT ZONING DISTRICT AS STATED IN THE MOST RECENT CITY OF BENTONVILLE ZONING CODE. FOR MORE INFO VISIT www.bentonvillplanning.com OR CALL THE PLANNING DEPARTMENT @ 479-271-3122

BEUD NOTES:
1. OWNER TO CONTACT NEW SERVICE COORDINATOR (271-3139) TO DISCUSS ELECTRIC SERVICE PRIOR TO BEGINNING ANY CONSTRUCTION. FAILURE TO CONTACT BEUD PRIOR TO CONSTRUCTION WILL RESULT IN DELAYS TO GET ELECTRIC SERVICE.
2. BEUD'S STANDARD PRACTICE IS TO PLACE UNDERGROUND EQUIPMENT (TRANSFORMERS, SECONDARY PEDESTALS, JUNCTION BOXES, ETC) ON THE LOT LINE OF A DEVELOPMENT. ANY ADJUSTMENTS TO THE PROPERTY LINE THAT RESULT IN OUR EQUIPMENT NOT BEING ON THE LOT LINE WILL REQUIRE THE DEVELOPER TO PAY FOR THE COST OF BEUD TO RELOCATE THE EQUIPMENT TO THE LOT LINE.
3. ALL STRUCTURES MUST MAINTAIN MINIMUM OF 20' CLEARANCES FROM ALL ELECTRIC LINES.
4. IT IS THE RESPONSIBILITY OF THE DEVELOPER TO PAY FOR ANY COSTS ASSOCIATED WITH MOVING OF EQUIPMENT. THIS INCLUDES BUT IS NOT LIMITED TO ANY COSTS ASSOCIATED WITH LOSS OF EQUIPMENT (WIRE AND ELBOWS) AND LABOR AND MATERIAL TO MOVE THE EQUIPMENT TO THE NEW LOT LINE.

PLAT NOTES:
1. THE LOCATION OF UTILITIES SHOWN HEREON ARE FROM OBSERVED EVIDENCE OF ABOVE GROUND APPURTENANCES. ALL UTILITY LINES APPEARING ON THIS PLAT, AS WELL AS THOSE THAT MAY EXIST UNDERGROUND NEED TO BE VERIFIED PRIOR TO DOING ANY TYPE OF EXCAVATION. SOME UTILITY LINES MAY ALSO EXIST THAT WERE NOT SHOWN ON THIS PLAT.
2. SIDEWALKS SHALL BE THE RESPONSIBILITY OF THE BUILDER/OWNER AT TIME OF BUILDING PERMIT ISSUANCE.
3. OWNER/DEVELOPER SHALL COORDINATE WITH ALL LOCAL UTILITIES TO INSURE THAT EACH LOT HAS WATER, SEWER AND ELECTRIC SERVICE.
4. BEFORE ANY WORK IN THE RIGHT-OF-WAY COMMENCES, CONTRACTOR AND OR OWNER IS TO OBTAIN RIGHT-OF-WAY PERMIT FROM THE CITY OF BENTONVILLE TRANSPORTATION DEPARTMENT.
5. THERE MAY NOT BE ANY FENCES OR ANY OTHER STRUCTURES BUILT IN ANY DRAINAGE EASEMENTS.

FLOOD CERTIFICATION:
NO PORTION OF THIS PROPERTY IS LOCATED WITHIN FLOOD ZONE 'A' OR 'AE' AS DETERMINED BY THE NATIONAL FLOOD INSURANCE PROGRAM FLOOD INSURANCE RATE MAP FOR BENTON COUNTY, ARKANSAS.
(FIRM PANEL #05007C0255K DATED 06/05/2012)

SURVEY DESCRIPTIONS:

PARENT TRACT (PARCEL #01-02469-000):
LOT 1, EAST SIDE ADDITION, BENTONVILLE, BENTON COUNTY, ARKANSAS, AS SHOWN ON PLAT RECORD "C" AT PAGE 124. SUBJECT TO ALL EASEMENTS AND RIGHTS-OF-WAY OF RECORD.

PARENT TRACT (PARCEL #01-02470-000):
LOT 2, EAST SIDE ADDITION, BENTONVILLE, BENTON COUNTY, ARKANSAS, AS SHOWN ON PLAT RECORD "C" AT PAGE 124. SUBJECT TO ALL EASEMENTS AND RIGHTS-OF-WAY OF RECORD.

NEW LOT 11:
A PART OF LOT 1, EAST SIDE ADDITION, BENTONVILLE, BENTON COUNTY, ARKANSAS, AS SHOWN ON PLAT RECORD "C" AT PAGE 124, BEING MORE PARTICULARLY DESCRIBED AS FOLLOWS, TO-WIT: BEGINNING AT A POINT ON THE SOUTH MASTER STREET PLAN RIGHT-OF-WAY OF SOUTHEAST 3RD STREET WHICH IS S03°49'29"W 12.59' FROM AN EXISTING PIPE MARKING THE NORTHWEST CORNER OF SAID LOT 1 AND RUNNING THENCE ALONG SAID RIGHT-OF-WAY S87°40'22"E 45.72'; THENCE LEAVING SAID RIGHT-OF-WAY S03°47'44"W 146.47', THENCE N89°08'28"W 45.80' TO AN EXISTING REBAR, THENCE N03°49'29"E 146.84' TO THE POINT OF BEGINNING, CONTAINING 0.15 ACRES, MORE OR LESS. SUBJECT TO ALL EASEMENTS AND RIGHTS-OF-WAY OF RECORD.

NEW LOT 12:
A PART OF LOT 1, EAST SIDE ADDITION, BENTONVILLE, BENTON COUNTY, ARKANSAS, AS SHOWN ON PLAT RECORD "C" AT PAGE 124, BEING MORE PARTICULARLY DESCRIBED AS FOLLOWS, TO-WIT: BEGINNING AT A POINT ON THE SOUTH MASTER STREET PLAN RIGHT-OF-WAY OF SOUTHEAST 3RD STREET WHICH IS S03°49'29"W 12.59' AND S87°40'22"E 45.72' FROM AN EXISTING PIPE MARKING THE NORTHWEST CORNER OF SAID LOT 1 AND RUNNING THENCE ALONG SAID RIGHT-OF-WAY S87°40'22"E 41.71', THENCE LEAVING SAID RIGHT-OF-WAY S03°47'44"W 146.13', THENCE N88°08'28"W 41.75', THENCE N03°47'44"E 146.47' TO THE POINT OF BEGINNING, CONTAINING 0.14 ACRES, MORE OR LESS, SUBJECT TO ALL EASEMENTS AND RIGHTS-OF-WAY OF RECORD.

NEW LOT 13:
A PART OF LOTS 1 AND 2, EAST SIDE ADDITION, BENTONVILLE, BENTON COUNTY, ARKANSAS, AS SHOWN ON PLAT RECORD "C" AT PAGE 124, BEING MORE PARTICULARLY DESCRIBED AS FOLLOWS, TO-WIT: BEGINNING AT A POINT ON THE SOUTH MASTER STREET PLAN RIGHT-OF-WAY OF SOUTHEAST 3RD STREET WHICH IS S03°49'29"W 12.59' AND S87°40'22"E 128.14' FROM AN EXISTING PIPE MARKING THE NORTHWEST CORNER OF LOT 1 OF SAID EAST SIDE ADDITION AND RUNNING THENCE ALONG SAID RIGHT-OF-WAY S87°40'22"E 41.71', THENCE LEAVING SAID RIGHT-OF-WAY S03°44'12"W 145.58', THENCE N88°08'28"W 41.86', THENCE N03°47'44"E 146.13' TO THE POINT OF BEGINNING, CONTAINING 0.14 ACRES, MORE OR LESS. SUBJECT TO ALL EASEMENTS AND RIGHTS-OF-WAY OF RECORD.

NEW LOT 14:
A PART OF LOT 2, EAST SIDE ADDITION, BENTONVILLE, BENTON COUNTY, ARKANSAS, AS SHOWN ON PLAT RECORD "C" AT PAGE 124, BEING MORE PARTICULARLY DESCRIBED AS FOLLOWS, TO-WIT: BEGINNING AT A POINT ON THE SOUTH MASTER STREET PLAN RIGHT-OF-WAY OF SOUTHEAST 3RD STREET WHICH IS S03°49'29"W 12.59' AND S87°40'22"E 41.71' FROM AN EXISTING PIPE MARKING THE NORTHWEST CORNER OF LOT 2 OF SAID EAST SIDE ADDITION AND RUNNING THENCE ALONG SAID RIGHT-OF-WAY S87°40'22"E 41.71', THENCE LEAVING SAID RIGHT-OF-WAY S03°44'12"W 145.44' TO AN EXISTING REBAR, THENCE N88°08'28"W 41.86', THENCE N03°44'12"E 145.58' TO THE POINT OF BEGINNING, CONTAINING 0.14 ACRES, MORE OR LESS. SUBJECT TO ALL EASEMENTS AND RIGHTS-OF-WAY OF RECORD.

BENTONVILLE PROJECT #LS21-0027

CERTIFICATE OF APPROVAL:
PURSUANT TO THE BENTONVILLE SUBDIVISION REGULATIONS AND ALL OTHER CONDITIONS AND APPROVAL HAVING BEEN COMPLETED, THIS DOCUMENT IS HEREBY ACCEPTED. THIS CERTIFICATE IS HEREBY EXECUTED UNDER THE AUTHORITY OF THE SAID RULES AND REGULATIONS.

DATE OF EXECUTION: _____

SIGNED _____
BENTONVILLE PLANNING COMMISSION CHAIRMAN

SIGNED _____
MAYOR, CITY OF BENTONVILLE

SIGNED _____
CITY CLERK, CITY OF BENTONVILLE

OWNER'S CERTIFICATION:
WE THE UNDERSIGNED, OWNERS OF THE REAL ESTATE SHOWN AND DESCRIBED HEREIN, DO HEREBY CERTIFY THAT WE HAVE LAID OFF, PLATTED, AND SUBDIVIDED AND DO HEREBY LAY OFF, PLAT, SUBDIVIDE SAID REAL ESTATE IN ACCORDANCE WITH THIS PLAT AND DO HEREBY DEDICATE TO THE USE OF THE PUBLIC THE STREETS, ALLEYS, DRIVES, EASEMENTS, ETC. AS SHOWN ON SAID PLAT.

DATE OF EXECUTION: _____

SIGNED: _____
PINNACLE VILLAS LLC

PROPERTY OWNERS:
PINNACLE VILLAS LLC
203 SE 22ND STE 15
BENTONVILLE, AR 72712

SOURCE OF TITLE: DEED BOOK L2021 AT PAGE 07152

ATLAS PAGE
404

SUBSCRIBED AND SWORN BEFORE ME, THIS ____ DAY OF _____, 2021.

_____
NOTARY PUBLIC

CERTIFICATE OF SURVEYING ACCURACY:
I, DERRICK THOMAS, HEREBY CERTIFY THAT THIS PLAT CORRECTLY REPRESENTS A BOUNDARY SURVEY MADE BY ME AND BOUNDARY MARKERS AND LOT CORNERS SHOWN HEREON ACTUALLY EXIST AND THEIR LOCATION, TYPE AND MATERIAL ARE CORRECTLY SHOWN AND ALL MINIMUM REQUIREMENTS OF THE ARKANSAS MINIMUM STANDARDS FOR LAND SURVEYORS HAVE BEEN MET.

DATE OF EXECUTION: _____

SIGNED: _____
REGISTERED LAND SURVEYOR NO. 1642 - STATE OF ARKANSAS

CERTIFICATE OF AUTHORIZATION
BATES & ASSOCIATES, INC.
#335
BENTONVILLE, ARKANSAS

0' 20' 40' 60'
GRAPHIC SCALE (IN FEET)
1 Inch = 20ft.

I HEREBY CERTIFY THIS TO BE TRUE AND CORRECT TO THE BEST OF MY KNOWLEDGE AND BELIEF ON THIS THE 8TH DAY OF APRIL, 2021.

REGISTERED PROFESSIONAL LAND SURVEYOR
STATE OF ARKANSAS
DERRICK L. THOMAS
1642
DRAFT
SIGNATURE

IF THE SIGNATURE ON THIS SEAL IS NOT AN ORIGINAL AND NOT BLUE IN COLOR THEN IT SHOULD BE ASSUMED THAT THIS PLAT MAY HAVE BEEN ALTERED. THE ABOVE CERTIFICATION SHALL NOT APPLY TO ANY COPY THAT DOES NOT BEAR AN ORIGINAL SEAL AND SIGNATURE.

VICINITY MAP

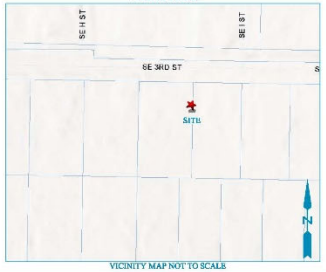

VICINITY MAP NOT TO SCALE

RECORDING NUMBER/DATE

LEGEND:
BOUNDARY / ROW (SURVEYED)
PARCEL / LOT LINE
TIE LINE
CENTERLINE OF ROAD
RIGHT OF WAY
WATER LINE
SANITARY SEWER LINE
SEWER LINE
BUSINESS & TOILETS TAKEWAY
ACCESS/UNDER UNIT
CLEAN OUT
SANITARY SEWER MH
FOUND 1/2" REBAR
FOUND 1/2" REBAR CAP
FOUND 5/8" REBAR/CAP
COMPUTED POINT
SET 1/2" REBAR & CAP
WATER VALVE
GAS METER

Bates & Associates, Inc.
Engineers · Surveyors · Landscape Architects
1304 S. WALTON BLVD. · BENTONVILLE, AR 72712 · (479) 273-4700 · FAX (479) 273-4744

FOR THE AND BENEFIT OF:
PINNACLE VILLAS LLC
ADDRESS:
NEAR S.E. 3RD STREET
BENTONVILLE, ARKANSAS

DATE: 06/01/21 | SURVEYED: | DRW. BY:
SCALE: 1"=20'
LOCATION: LOTS 1 & 2 EAST SIDE ADDITION
REVISED: BY
COA #335

DRAWING #21-111

ORDINANCE NO._____

AN ORDINANCE ACCEPTING A LOT SPLIT OF LOTS 1 & 2, EAST SIDE 1ST ADDITION TO THE CITY OF BENTONVILLE, ARKANSAS (PROJECT NUMBER: LS21-0027).

WHEREAS, pursuant to the provisions of the Land Development Code of the Bentonville Municipal Code, the lot split of Lots 1 & 2, East Side 1st Addition, Benton County, Arkansas, was submitted to the Bentonville Planning Commission on June 15, 2021; and,

WHEREAS, said lot split is attached hereto as Exhibit "A"; and,

WHEREAS, the Bentonville Planning Commission considered said lot split on the date stated, and at other times, and voted to recommend the approval of said lot split to the City Council; and,

WHEREAS, the lot split of real property as described herein has been submitted to the City Council of the City of Bentonville and, after consideration and deliberation, said Council is of the opinion that said lot split should be approved.

NOW, THEREFORE, BE IT ORDAINED BY THE CITY COUNCIL FOR THE CITY OF BENTONVILLE, ARKANSAS:

Section 1: That the lot split of Lots 1 & 2, East Side 1st Addition to the City of Bentonville, Arkansas, should be and the same is hereby accepted and approved for all purposes.

Section 2: That the Mayor and City Clerk be and are hereby authorized and directed to evidence the acceptance of said lot split by certifying said acceptance on the approved lot split.

PASSED AND APPROVED this_____ day of _____, 2021.

APPROVED:

_____
Stephanie Orman, Mayor

ATTEST:

_____
Kirby Romines, City Clerk

Agenda Item Form

Date of City Council Meeting	**6/22/2021**
Department	**Comprehensive Planning**
Submitted by	**Danielle Semsrott, AICP**
Phone	**(479) 271-6827**

Item Type: (*Check All That Apply*)					
☐ Budget Adjustment	☐ Change Order	☑ Informational	☐ Ordinance	☐ Resolution	☐ Bid Award

Recommendation/Suggested Action *(Enter recommendation in space below):*

Recognition by City Council of Alvin and Victoria Mizner who reside at 1704 NE Chapel Hill Drive. The property's landscaping was nominated by a Bentonville resident and is the June Residential Landscaping of the Month award winner.

Estimated Cost	**$**
Is this Item Budgeted?	☐ Yes ☐ No

If no, please explain how item will be funded *(briefly explain in space below)* **:**

MEMO

Date: June 22, 2021
To: Bentonville City Council
From: Danielle Semsrott, AICP, Senior Planner
RE: Residential Landscaping of the Month Award

Dear Bentonville City Council,

The Residential Landscaping of the Month Award recognizes the hard work and pride exhibited by Bentonville residents because we are proud to have a community that strives to beautify their homes, neighborhoods, and the City of Bentonville.

The award was created to recognize Bentonville residents who have improved and maintained the exterior landscaping of their homes. The award is intended to inspire others to take pride in their home, improve their landscaping, pick up litter, and to improve the quality of life in the City of Bentonville.

The evaluation criteria are based on five categories: consistent maintenance, tasteful and creative landscaping, lawn accents, good use of seasonal color, and overall appearance.

The winners for the month of June in the residential category are Alvin and Victoria Mizner, who reside at 1704 NE Chapel Hill Drive. The property was nominated by a Bentonville resident.

The Mizner's have called NWA their home for 17 years. Having lived in numerous locations in the U.S. they find the weather in NWA to be the most tropical and colorful, and color is one of their top priorities. The yard incorporates many indigenous trees to support the local wildlife while the flowering plants are mostly deer resistant or must be maintained nightly to keep their blooms. Landscaping is a great way to beautify the neighborhood and put a smile on anyone's face, and gardening is an amazing therapy as well!

Award winners are honored by the Mayor with a certificate and are presented with a decorative yard sign designating their landscaping as a winner. A photograph of the award winning landscaping will be placed in the next edition of the City of Bentonville's newsletter, the Bentonville Focus.

Respectfully,

Danielle

Danielle Semsrott, AICP
Senior Planner

Agenda Item Form

Date of City Council Meeting	**6/22/2021**
Department	**Water Utilities Department**
Submitted by	**Mike Bender**
Phone	**(479) 271-6873**

Item Type: (*Check All That Apply*)					
☐ Budget Adjustment	☐ Change Order	☐ Informational	☑ Ordinance	☐ Resolution	☐ Bid Award

Recommendation/Suggested Action (*Enter recommendation in space below*):

Ordinance requested by Bentonville Water Utilities Staff for City Council approval amending Article 98-VI. Water Utilities Construction Specifications of the City of Bentonville Municipal Code. This is a direct replacement of Section 98-692 through Section 98-709. The new specifications will replace the 2008 version of the specifications. The revision includes updating multiple part numbers and allowing for more reputable appurtenances from multiple manufacturers. Each modification has been thoroughly researched and tested in the field by City of Bentonville water and sewer personnel. Utility Board approved this item 5-0 on May 25, 2021.

Estimated Cost	**$**
Is this Item Budgeted?	☐ Yes ☐ No

If no, please explain how item will be funded (*briefly explain in space below*) **:**

Memo

To: City Council, Mayor Orman

From: Mike Bender

CC:

Date: June 22, 2021

Re: 2021 City of Bentonville Water Utilities Specifications

Ordinance. - Staff requests council approval of an ordinance to replace the existing Water and Sewer Specifications and adopt new specifications. Staff began to gather information for the revision in 2012 and has thoroughly vetted all the revisions with contractors, suppliers, engineers and manufacturers.

Bentonville Water Utilities entered into a contract with Garver Engineering in July 2019 to review all aspects of the new standards and facilitate a workshop with all stakeholders. The meeting was held on November 6, 2019 at Fire Station #1. Chris Buntin with Garver Engineering made the necessary revisions to the specifications while addressing concerns and recommendations from the stakeholders.

In the summer of 2020, Water Utilities sent the final revision to the Arkansas Department of Health for review. All comments were addressed by staff and we received formal approval of the Water and Sewer Specifications on April 5, 2021. On May 25, 2021 Bentonville Utility Board also approved the specifications as provided.

Bentonville Water Utilities staff is confident the installation practices, materials, and testing procedures outlined in the specifications will protect the public health and minimize long term maintenance cost. Staff also believes the material cost and procedural time is appropriate and proportional for both private and public infrastructure projects.

Significant amendments to the Bentonville Water Utilities Specifications are as follows:

GENERAL

- Multiple quality assurance organizations' references were updated including ASTM, AWWA and ANSI standards

- ❖ As-builts
    - ○ Tables for utilities with GPS coordinates would be provided for all appurtenances. Information will be directly placed into the GIS.
- ❖ All materials must be domestically manufactured.
- ❖ The PSI rating for PVC was changed to reflect an industry standard from the pipe manufactures.
- ❖ All utility easements must be a Minimum of 20' and 5' must be provided between utilities.
- ❖ Each individually owned property or structure shall have direct connection to public water or sewer.
- ❖ All references to Street or Road construction was removed and deferred to the Street Specification.

WATER

- ❖ 2" conduit must be provided on all street crossing for the 1" service line.
- ❖ Pressure test of the tapping valves shall occur twice. In both the Opened and Closed position
- ❖ Add Star Pipe DI fitting to approved fittings list
- ❖ Add Romac tapping saddles to approved list.
- ❖ Add Mueller Valves to approved list.
- ❖ All lots greater than 6500 square feet must provide a double water meter setter.
- ❖ Square DFW style meter tile must be installed when the tile is located in a sidewalk or turning radius. DFWs are ADA compliant.

SEWER

- ❖ Manholes within 500' upstream of a lift station wet well shall be epoxy lined along with the manhole where the forcemain connects as a measure to reduce degradation.
- ❖ Manhole rims may be vertically adjusted up to 24" with 2 ring risers

LIFT STATIONS

- ❖ An alternative means of power must be provided to test run the lift station prior to acceptance.

BACKFLOW

- ❖ A change in use to commercial will require compliance with the Cross Connection Program
- ❖ All commercial uses require a RPZ type backflow device.
- ❖ RPZs are required to be installed on commercial development within a mixed use district, however a spool can be installed in lieu of the RPZ if the current use is residential.

CITY OF BENTONVILLE

WATER UTILITIES DEPARTMENT SPECIFICATIONS

Water Utilities Department – (479) 271-3140

Wastewater Treatment – (479) 271-3160

Fire Department – (479) 271-3151

www.bentonvillear.com

2021

Council Approved - **Ordinance -**

Approved by Arkansas Department of Health - # _____

CITY OF BENTONVILLE
WATER UTILITIES
1000 SW 14TH STREET
(3200 SW MUNICIPAL DR)
BENTONVILLE, AR 72712

Table of Contents

SECTION	DESCRIPTION	PAGE
SECTION 1	GENERAL INFORMATION	1
1.1	ALL MATERIALS SHALL BE DOMESTICALLY MADE	1
SECTION 2	DEFINITIONS AND ABREVIATIONS	2
SECTION 3	LAWS, REGULATIONS AND ORDINANCES	3
SECTION 4	PERMITS AND LICENSES	3
SECTION 5	PLANS AND SPECIFICATIONS	4
5.1	Record Drawing Standards	4
5.2	CAD Files	5
5.3	Shape Files	5
5.4	Data Files	5
5.5	Water Features	5
5.6	Sewer Features	7
5.7	Required Data Folder File Format	9
SECTION 6	INSPECTION	10
SECTION 7	CONTRUCTION LAYOUT	11
SECTION 8	FINAL INSPECTION PROCEDURES	11
SECTION 9	GENERAL REGULATIONS FOR CONSTRUCTION PURPOSES	13
9.2	Underground Utility Notification	14
9.3	Water Outages	14
9.4	Trench Dewatering	14
9.5	Location, Alignment and Grade	14
9.6	Public Travel	15
9.7	Surface and Subsurface Structures, Location and Protection	15
9.8	Protection of Vegetation	15
9.9	Excavation and Preparation of Trench	16
9.10	Work Performed by Department	17
9.11	Confined Spaces	17
9.12	Public Employees Right to Know Act	18
9.13	Clean-Up of Job Sites	18
SECTION 10	GENERAL INSTALLATION INFORMATION AND PROCEDURE	18
10.1	Handling Pipeline Materials	18
10.2	Pipe Embedment	19
10.3	Compaction	19
10.4	Jointing PVC and Ductile Iron Pipe and Fittings	19
10.5	Jointing Flanged Pipe and Fittings	20
10.6	Jointing Mechanical Joint Pipe and Fittings	20

10.7	Pipe Deflection	21
10.8	Pipe Material	21
SECTION 11	**WATER DISTRIBUTION SYSTEM GENERAL INFORMATION**	21
SECTION 12	**WATER DISTRIBUTION SYSTEM MATERIALS**	23
12.2	Pipe	23
12.3	Polyvinyl Chloride (PVC) Water Pipe (4"- 12")(14"- 48")	23
12.4	Ductile Iron Pipe	24
12.5	Ductile Iron Pipe 4" – 54"	24
12.6	Polyethylene Pipe (PE)	24
12.7	Copper Pipe	24
12.8	Encasement Pipe	24
12.9	Fittings	25
12.10	Tapping Sleeves (4" Tap and Larger)	26
12.11	Sleeves or Couplings	27
12.12	Tapping Saddles or Sleeves (F.I.P. or C.C. Outlet)	27
12.13	Service Fittings	28
12.14	Gate Valves	30
12.14.1	Gate Valves – 4" Through 18" with Resilient Seat	30
12.15	Butterfly Valves	30
12.16	Air Release Valves	31
12.17	Valve Boxes, Lids and Extensions	31
12.18	Meter Boxes, Vaults and Lids	32
12.19	Fire Hydrants	32
12.20	Polyethylene Tubing Material for Pipe Encasement	33
12.21	Locator Wire	33
12.22	Concrete Material Specifications	34
12.23	Percent Retained By Weight	34
12.24	Concrete Proportions and Consistency	34
12.25	Concrete Testing	35
SECTION 13	**INSTALLATION CRITERIA FOR WATER MAINS AND APPURTENCES**	35
13.1	Connections to Water Distribution System	35
13.2	Installation of Valves	36
13.3	Installation of Tapping Sleeves and Tapping Saddles	36
13.4	Fire Hydrant Installation	37
13.5	Concrete Placement and Finishing	38
13.6	Concrete Reinforcement	39
13.7	Concrete Cold-Weather Requirements	39
13.8	Concrete Hot-Weather Requirements	40
13.9	Concrete Thrust Blocks and Anchor Collars	40
13.10	Pressure Table	41
13.11	Installation of Polyethylene Protection Material	42
13.12	Meter Connections	43
13.13	Filling Water Lines	43
13.14	Hydrostatic Pressure and Leakage Tests	43
13.15	Disinfecting Water Lines and Appurtenances	44
13.16	Cleaning Large Pipelines	45

SECTION 14	**WASTEWATER COLLECTION SYSTEM GENERAL INFORMATION**	46
14.2	Encasement Pipe	47
14.3	Minimum Slope for Sewer Line Installation Table	48
SECTION 15	**WASTEWATER COLLECTION SYSTEM MATERIALS**	48
15.2	Polyvinyl Chloride (PVC)	49
15.3	Ductile Iron Pipe	49
15.4	Pipe Accessories	49
15.5	Fittings	49
15.6	Cleanouts	50
15.7	Force Mains	50
15.8	Tracer Wire Ports for Force Mains	50
SECTION 16	**SEWER MANHOLE INFORMATION AND MATERIALS**	50
16.2	Concrete Curing and Compounds	50
16.3	Cast-in-Place Manholes	50
16.4	Drop Type Manholes	51
16.5	Manhole Abandonment	51
16.6	Manhole Rings and Lids	51
16.7	Private Manhole	51
16.8	Watertight Manhole Rings and Lids	51
16.9	Manhole Steps	52
16.10	Water Stops	52
16.11	Manhole Configuration and Construction	52
16.12	Manhole Shape and Inside Dimensions	52
16.13	Manhole Design Depth, Height and Placement	52
16.14	Main and Service Pipes	53
16.15	Connections to Manholes	53
16.16	Inverts	53
SECTION 17	**SEWER SYSTEM GENERAL INSTALLATION INFORMATION**	53
17.2	Field Quality Control	53
17.3	Air Testing of Gravity Sewer Lines	53
17.4	Gravity Sewer Air Testing Time Requirements	54
17.5	Hydrostatic Pressure and Leakage Test of Force Mains	54
17.6	Testing Safety Precautions	55
17.7	Ground Water Elevations	55
17.8	Test Equipment	55
17.9	Mandrel Testing	56
17.10	Manhole Vacuum Testing	56
17.11	Close Circuit Television Inspection (CCTV)	57
17.12	Acceptance of Installation	57
17.13	Warranty	57
SECTION 18	**SEWER LIFT STATIONS**	58
18.2	Final Acceptance	58
18.3	Basic Control Panel Specifications	58
18.4	Level Controls	59
18.5	Access Road	59

18.6	Lift Station and Site	60
18.7	Pump Requirements	60
18.8	Lift Station Plumbing	61
18.9	Valve Vaults and Wet Wells for Lift Stations	61
18.10	Valves	62
SECTION 19	**SEWER LIFT STATIONS – PRIVATE**	62
19.2	Lift Station Site	62
19.3	Basic Control Panel Specifications	62
19.4	Pump Requirements	63
SECTION 20	**CROSS CONNECTION CONTROL PROGRAM MANUAL**	63
20.1	General	63
20.2	Introduction	63
20.3	Purpose	63
20.4	Definitions	63
SECTION 21	**ADMINISTRATION**	66
21.1	Authority of Approving Authority	66
21.2	Powers and Authorities of Inspectors	67
21.3	Cross-Connection Surveys	67
21.4	Scheduling Surveys, Priorities	68
21.5	Other Surveys	68
21.6	Follow-up Surveys	68
21.7	Enforcement Action	68
SECTION 22	**PUBLIC WATER SYSTEMS**	68
22.1	Auxiliary Public Water Systems	68
SECTION 23	**DOMESTIC WATER SERVICE LINES**	68
23.1	General	68
23.2	Costs	69
23.3	RPZA Containment	69
23.4	Containment Not Required	71
23.5	Retrofit	71
SECTION 24	**FIRE PROTECTION SERVICE LINES**	71
24.1	Classes of Fire Protection Systems	71
24.2	Backflow Prevention on Fire Protection Systems	72
24.3	Retrofit of Existing Systems	72
24.4	Assembly Installation	73
24.5	Plan Approval	73
24.6	Definitions	74
24.7	Flow/Pressure Loss Table	74
SECTION 25	**CONSUMER RESPONSIBILITIES**	75
25.1	General	75

SECTION 26	**ASSEMBLY SPECIFICATIONS**	75
26.1	General	75
26.2	Backflow Prevention Assemblies	76
SECTION 27	**ASSEMBLY INSTALLATION, RECORDS AND REPORTS**	77
27.1	General	77
27.2	Authorized Installers & Testers	77
27.3	Permits	77
27.4	Installation Detail	77
	Pictures – Hot Box	78
	Pictures –Assemblies	78
27.5	RPZA & DRPZA Installation	79
27.6	DDCVA & DCVA Installation	80
27.7	Temporary Use Assemblies	80
27.8	Reporting Requirements	80
27.9	Records	80
27.10	Protection of Assemblies	81
27.11	Penalties	81

Appendix A Detailed Drawings

BENTONVILLE WATER UTILITIES
CONSTRUCTION SPECIFICATIONS

SECTION 1 GENERAL INFORMATION

1.1 ALL MATERIALS SHALL BE DOMESTICALLY MADE

Any deviation to require DEPARTMENT approval, and certificate(s) of materials origin shall be provided at the pre-construction meeting.

1.2 The intent of this publication is to simplify and expedite the process of water and sewer construction within the jurisdiction of the City of Bentonville. This publication specifically applies, but is not limited to "Subdivision" and "Large Scale Development". All rules and regulations set forth by the ADH - Division of Engineering, shall be the minimum standard of all construction and development practices to be approved by the Bentonville Water Utilities. In such case as the standard specifications herein set forth exceeds the Arkansas Department of Heath specifications, this document as approved by the City Council of Bentonville, Arkansas shall govern.

1.3 These general and detailed specifications shall govern the handling and installation of pipe and appurtenances for the City of Bentonville Water Utilities. Specifications stipulate general requirements for the preparation of reports, plans, specifications, methods of construction, inspection, testing, and final approval of any proposed water and/or sanitary sewer lines, appurtenances, or other structures that are within the jurisdiction of Bentonville Water Utilities. Any requested deviation from the specifications herein set forth, shall be reviewed on a case-by-case basis by the DEPARTMENT and approved or denied by written authorization of the MANAGER.

1.4 Special conditions may arise on projects that are not covered in these specifications or that may require special handling. In case of such special conditions, complete detail as to materials, method of construction or other procedures shall be submitted to the Bentonville Water Utilities for review and approval. Standard construction details are incorporated and made a part of the specifications and shall become a part of the standard requirements for water line, sewer line and lift station construction. The standard details are included in these appendices at the back of these specifications. Where reference is made to a particular industry specification (ASTM, etc) it is hereby understood that reference is made to the latest specification revision in effect.

1.5 These specifications are intended to set forth minimum standards of quality for the construction of water and sewer facilities which are to be accepted by the Bentonville Water Utilities. These specifications do not replace the ENGINEERS specifications and contract documents; however, construction of all water and sewer facilities must meet these standards of quality as a minimum. The Bentonville Water Utilities shall not be responsible nor shall it bear any liability for CONTRACTOR'S means, methods, techniques, sequences or procedures of construction, or the safety precautions and programs incident thereto, nor shall the Bentonville Water Utilities be responsible for any actions resulting from direction of the project by a City of Bentonville ENGINEER/INSPECTOR. The Bentonville Water Utilities shall not be responsible for the acts or omissions of the CONTRACTOR, Sub-Contractor, supplier, or of any other person or organization performing or furnishing any of the work. Nothing contained in these specifications shall be construed as an endorsement or warranty by the Bentonville Water Utilities of any product, material, or workmanship. The Bentonville Water Utilities shall not be responsible nor shall it bear any liability for the durability of any material or method of construction. Material used on any project shall be warranted against defects and workmanship by responsible CONTRACTOR for one calendar year from date of acceptance.

SECTION 2 DEFINITIONS AND ABBREVIATIONS

2.1 DEPARTMENT: Refers to the Bentonville Water Utilities, under the jurisdiction of the Bentonville City Council, hereinafter referred to as "DEPARTMENT"; having full and complete authority to manage, operate, improve, extend and maintain the City water distribution system and sewer collection system.

2.2 ENGINEERING DEPARTMENT: City of Bentonville Engineer.

2.3 MANAGER: Bentonville Water Utilities Manager.

2.4 DEVELOPER: Industrial partnership, corporation, or other legal entity such as an improvement district, desiring to construct water and/or sanitary sewer facilities for immediate or contemplated future inclusion in the city system.

2.5 ENGINEER: Individual registered to practice Engineering in the State of Arkansas who is responsible for the preparation of reports, plans, specifications and inspection of the work herein approved.

2.6 CONTRACTOR: The person, firm or corporation with whom the DEVELOPER has entered into an agreement to construct the water and/or sewer improvements.

2.7 CITY INSPECTOR: City of Bentonville Engineering Department Inspector responsible for inspection, and notification of proposed reconstruction or alterations and inspections involving the City of Bentonville's water and sewer system.

2.8 RESIDENT INSPECTOR: An authorized representative of the ENGINEER responsible for the inspection of construction for compliance with approved plans, specifications and other contract documents.

2.9 NORMAL WORK SCHEDULE: The City of Bentonville's normal work schedule is Monday through Friday 7:30 AM to 4:00 PM except HOLIDAYS.

2.10 HOLIDAYS: New Year's Day, Martin Luther King Day, President's Day, Memorial Day, Independence Day, Labor Day, Veteran's Day, Thanksgiving Day, Friday following Thanksgiving Day, Christmas Eve and Christmas Day.

2.11 TERMS: "As specified" shall mean as specified by the DEPARTMENT in plans, proposals, specifications, and other written instructions.

2.11.1 The term "or equal" shall mean that the proposed material or item shall perform adequately the duties imposed by the general design and is of the same or equal design, substance and junction to that specified by using the name of a product, manufacturer, or vendor. Use of the term "equal" shall mean any party proposing to substitute an "equal" shall obtain an approval from the DEPARTMENT. The DEPARTMENT shall make final approval of such items or materials judged to be "equal".

2.11.2 The term "these specifications" shall refer to the "Design Materials and Construction Specification of Water and Sewer Facilities", latest revision, written by the DEPARTMENT. It is the responsibility of the CONTRACTOR, ENGINEER, DEVELOPER or OWNER, etc. to obtain copies and to comply with the latest revision of these specifications.

2.12 Abbreviations used throughout these specifications have meanings as follows:

ASTM.....American Society for Testing and Materials
AASHTO.....American Association State Highway & Transportation Officials
ARDOT.....Arkansas Highway Transportation Department
DEQ.....Arkansas Department of Energy Environment, Division of Environmental Quality
ADH.....Arkansas Department of Health
ADL.....Arkansas Department of Labor
ANSI.....American National Standards Institute
AWWA.....American Water Works Association (Latest Revision)
CTS.....Copper Tubing Size
CI.....Gray Cast Iron
CS or CC.....AWWA (Mueller Corp Stop Thread)
DI.....Ductile Iron
DFT.....Film Thickness
FCCCHR.....Foundation for Cross Connection Control & Hydraulic Research
FIP.....Female Iron Pipe
HDPE.....High Density Polyethylene
ID.....Inside Diameter
IP.....Iron Pipe
MIP.....Male Iron Pipe
NFPA.....National Fire Protection Association
OD.....Outside Diameter
OSHA.....Occupational Safety and Health Administration
PE.....Polyethylene
PSI/PSIG.....Pounds per Square Inch (gauge)
PVC.....Polyvinyl Chloride
SSPC.....Steel Structures Painting Council
USACE.....U.S. Army Corps of Engineers

SECTION 3 LAWS, REGULATIONS AND ORDINANCES

3.1 This section covers such rules and regulations as required by statute for the completion of plans, specifications and construction work on any and all proposed water and/or sanitary sewage facilities.

3.2 All Federal, State, County and City Laws, Regulations or Ordinances shall be complied with on all projects. This shall include, but not be limited to the obtaining of approval from ADH, DEQ, and USACE. Submission to and approval by ADH, DEQ, and USACE shall be the ENGINEERS responsibility, including payment of any applicable fees. Approved plans and specifications shall be returned to the City of Bentonville for file and inspection prior to the pre-construction meeting.

SECTION 4 PERMITS AND LICENSES

4.1 All permits and licenses required by a Federal, State, County or City shall be obtained in strict accordance with requirements of the governing agency. When required by the licensing agency, the DEPARTMENT will assist in application for permits and licenses, but the cost of any permit, fee or bond required will be borne by the DEVELOPER. The DEPARTMENT shall charge 10% of the bond fee as a handling charge. Permits for all street bores within the City of Bentonville's corporate limits shall be permitted by the Bentonville Street Department. Permits for boring of state highways will be permitted via the DEPARTMENT as to obtaining permission from ARDOT. The project ENGINEER shall provide footage's, profiles, and any other documented information necessary to the DEPARTMENT for State boring permits. Project ENGINEER may obtain permit and obtain ARDOT permit without going through the DEPARTMENT. ARDOT

will require a check for the full amount of bond to ARDOT. Project ENGINEER to submit copy of approved permit to DEPARTMENT when received.

SECTION 5 PLANS AND SPECIFICATIONS

5.1 RECORD DRAWING STANDARDS

5.1.1 Prior to final inspection of the project, one (1) complete set of "As-Built" drawings shall be PDF and furnished or emailed to the DEPARTMENT for record purposes by the same ENGINEER who prepared and submitted the construction plans and specifications. Change of ENGINEERING firm shall warrant re-submittal both to CITY ENGINEERING and ADH. CITY ENGINEERING shall be notified in writing of change in Engineering Firm, additional requirements considered on a case-by-case basis. Record Drawing Standards shall be as outlined below:

5.1.2 Record Drawings shall be received prior to final inspection in paper and digital formatted copies. If found to be incorrect during inspections, CAD drawings shall be revised and a new PDF will be created and both sent to the DEPARTMENT.

5.1.3 The Record Drawings must be printed from the AutoCAD files supplied to the Engineering Department concurrently with the Record Drawings. These plans shall have been corrected to show all field changes made to the approved drawings. Hand marked copies prepared by the contractor will not be accepted for "Record Drawings".

5.1.4 Record Drawings shall include the site plan, construction plan sheets, and any supplementary drawings and shop drawings. Plan of lift stations or other special features should be shown if applicable. "Record Drawing" is to be stamped in large clear print on plans.

5.1.5 Public vs. Private Infrastructure shall be delineated on the PDF plans as well as the digital and data (.shp & .csv) files. Public vs. Private utilities shall clearly be identified on the PDF plan when both are present. If private utilities are present, then two (2) sets of data files will be required with the submittal. One set for public only, as outlined in these standards, and the other shall include private infrastructure only.

5.1.6 Piping line work for both water and sewer infrastructure shall be drawn as continuous segments without breaks. Breaks shall only occur at constructed locations of valves, manholes or other assets along a pipe segment.

5.1.7 Material Quantity Table – Utility Sheet to include a material quantity table of all public infrastructure that was installed during construction for each project. Table information shall quantify the entire water and sewer infrastructure that was constructed. To include all water and sewer lines, bends, tees, hydrants, valves, meter sets, manholes, etc. Table 5.8.

5.1.8 All plans shall be drawn to a scale suitable for adequately showing the facilities proposed, except as stipulated herein. All plans and profiles of sewer lines shall be drawn to scale with the profile vertical scale at **1" = 5'** and plan horizontal scale for water and/or sewer lines of **1" = 30'** or larger. All drawings shall be no larger than **24" X 36" sheets**. All elevations shall be based on mean sea level. An overall project map shall be a minimum 24" X 36" and shall depict the entire project and show all proposed water and/or sewer lines properly labeled as to size and pipe material. All other utilities shall be shown along with the proposed road profile if applicable. A vicinity map at a scale **of 1" = 2,000'** shall be furnished indicating the location of the project in relation to arterial streets and major highways. Reduced size drawings may be allowed for inspection purposes after all approvals have been obtained.

5.2 **Cad Files - .dwg & .dxf**

5.2.1 Submit one or more AutoCAD / Civil 3D (.dwg format AND .dxf) drawing files that contain the entire utility infrastructure (water and sewer,) that was constructed with the project, as well as all other pertinent reference lines, project information, and survey control data. The following layers are requested to be used for all "Water" features: BWD-WATER & BWD-WATERTXT and the following layers are requested to be used for all "SEWER" features; BWD-SEWER & BWD-SEWERTXT." The infrastructure shall be drawn in the file at the as-built locations as surveyed and certified by the Professional Land Surveyor. The AutoCAD file(s) shall be placed into a folder named "CAD" on the submitted media. Please note: the delivered CAD files should not be of the Plan/Profile sheets, but should be the overall working drawing in "model space" that is registered to AR North State Plane, NAD 1983.

5.3 **Shape Files - .shp**

5.3.1 Submit as-built data for direct import into the City's Geographic Information System (GIS). Submit four (4) shape (.shp) files; One (1) shape file (points), named "WTR_F" that contains all of the water infrastructure features that was constructed with the project; One (1) shape file (lines), named "WTR_L" that contains all of the water infrastructure lines that was constructed with the project; One (1) shape file (points), named "SWR_F" that contains all of the sanitary sewer infrastructure features that was constructed during the project; One (1) shape file (lines), named "SWR_P" that contains all of the sanitary sewer infrastructure lines that was constructed during the project. Each shape file shall include all features and line work that was constructed with the project only. Correctly name the files as outlined above. The shape files shall match the data files (.csv)

5.4 **Data Files - .csv**

5.4.1 Data shall consist of files in an ASCII Comma Separated Value (CSV) file format. The preferred horizontal coordinate system for the digitally submitted data as described below shall be AR NORTH State Plane (NAD83), U.S. Survey Feet. The preferred vertical coordinate system for the digitally submitted data as described below shall be North American Vertical Datum, 1988 (NAVD 1988), U.S. Survey Feet. All of these file(s) shall be placed into a folder named "DATA" on the submitted media.

5.5 **Water Features**

5.5.1 The file shall be named "Water_Features" and contains various elements that connect and control the distribution of water within and among various water lines. These features include both buried fittings (bends, crosses, end caps, reducers, and tees) and features that are accessible and/or visible at the surface (meters, valves, and hydrants). Buried features should be located similar to the method our utility locators use: (a paint dot is placed on the pavement at the approximate location of the feature and then surveyed location is taken at the paint mark.)

Water line locations are required only if the water line curves. These locations shall be surveyed at 25 foot stations along the length of the water line.

Each line of the file shall contain the following information:

ID, Type, Northing, Easting, Elevation, Description (all on first line of the file)

Where:

ID - A unique ID number assigned to each feature noted on the as-built plan and profile sheets (e.g. GV1, HYD1, etc.)

Type - The type of feature. Provide the following codes as indicated in the table below:

5.5.2 Water Features Descriptions

Feature Description	Type
Air Release Valve	ARV
Backflow Preventer	BFP, RPZ, RPA, etc.
Bend	BEND
Blow Off	BLOWOFF
Cross	CROSS
Demarcation Valve	DMV
Encasement	ENCASE
End Cap	CAP
Fire Department Connection	FDC
Fire Hydrant	HYDRANT
Post Indicator Valve	PIV
Reducer/Increaser	REDUCER
Tee/Tapping Sleeve	TEE
Water Valve	VALVE
Water Line	WATERLINE
Water Meter	METER

Northing – North coordinate value (+/- 2.0' if buried, +/- 0.1' otherwise)
Easting – East coordinate value (+/- 2.0' if buried, +/- 0.1' otherwise)
Elevation – Elevation, collected as follows: (+/- 2.0' if buried, +/- 0.1' otherwise)

5.5.3 Water Feature Elevation Locations

Feature Type	Elevation Location
BEND/BLOWOFF/CROSS/END CAP/REDUCER/TEE	Surface, at the mark that indicates the approximate location of the buried feature.
HYDRANT	Top of the fire hydrant.
METER/VALVE	Center of the access structure.
WATERLINE	Surface, at the mark that indicates the approximate location of the buried line, at 25 foot stations. *Only required if a water line is curved.*

Description - The description of the item for the feature; encoded as follows:

5.5.4 Water Feature Descriptions

Feature Type	Description
BEND	Degree of bend (e.g. 11.25/22.5/45/90).
BLOWOFF	Size (in inches) of the blow off.
CROSS	Size (in inches) of each water line that connects to the cross (e.g. "12x12x8x8").
ENDCAP	Size (in inches) of the water line.

HYDRANT	Manufacturer and year of manufacture. This information will be on the hydrant (e.g. "CLOW- 2004").
METER	The size (in inches).
REDUCER	The size (in inches) of the lines on either side of the reducer (e.g. "8x4").
TEE	The sizes (in inches) of each water line that connects to the tee (e.g. "12x12x8").
VALVE	The size (in inches) and type of the valve (e.g. 6 GV, 12 BFV)
WATERLINE	No description required.

Example file format:

ID	Type	Northing	Easting	Elevation	Description
GV1	VALVE	749862.3433	653776.6033	1215.05	8 GV
BEND1	BEND	749818.6838	653805.9192	1214.15	22.5 BEND

5.5.6 Water Lines

The file shall be named "Water_Lines" and shall contain the following data. There is one line of data for each water line that connects two water features.

ID, Size, Material, FeatureID1, FeatureID2 (all on first line of the file)
Where:

ID – A unique number assigned to each section of water line noted on the as-built plan and profile sheets (e.g. "WL1")

Material – Water line material

Size – The size (in inches) of the water line

FeatureID1 - The ID of the feature on the near end of the water line as shown on the as- built plans (e.g. "GV1")

FeatureID2 - The ID of the feature on the far end of the water line as shown on the as- built plans (e.g. "HYD1")

Example file format:

ID	Material	Size	FeatureID1	FeatureID2
WL1	PVC	8	GV1	GV2
WL2	PVC	8	GV10	GV1

5.6 Sewer Features

The file shall be named "Sewer_Features" and shall contain information about manholes, cleanouts, and other features listed in the table below. There is one line of data for each sewer feature.

Buried features such as force main bends and tees should be located similar to the method our utility locators use: (a paint dot is placed on the pavement at the approximate location of the feature and then surveyed location is taken at the paint mark.)

Force main locations (see the "FORCEMAIN" type in the table below) are required only if the force main curves. These locations will be surveyed at 25 foot stations along the length of the water line.

End of service locations shall be the location at which the stub-out connection point is to be made. Section 14.2.7

ID, Type, Northing, Easting, Elevation, Invert, Material (all on first line of file)

Where:

ID – If the feature is a manhole then the number as shown on the as-built drawings (e.g. "MH1"). If feature is a clean out then a lot number or street address (e.g. "LOT10" or "123 Street Name").

Type – The feature type, coded according to the following table:

5.6.1 **Sanitary Sewer Features Descriptions**

Feature Description	Type
Clean Out	CLEANOUT
Drain	DRAIN
End Of Service	SERV
Force Main Valve	FMVALVE
Force Main Tee	FMTEE
Force Main Bend	FMBEND
Force Main	FORCEMAIN
Grease Trap	GREASETRAP
Manhole	MANHOLE
Sand / Oil Separator	SOS
Tracer Wire Port	TWPORT

Northing – North coordinate value at the center of cover (+/- 0.1').
Easting – East coordinate value at the center of cover (+/- 0.1').
Elevation – Rim elevation at the center of cover (+/- 0.1')

5.6.2 **Sanitary Sewer Features Elevation Locations**

Feature Type	Elevation Location
CLEANOUT	Surface adjacent to the cleanout.
DRAIN	Center of the drain grate.
FMVALVE	Center of the access structure.
FMTEE/FMBEND	Surface, at the mark that indicates the approximate location of the buried feature.
FORCEMAIN	ark that indicates the approximate location of the buried main, at 25 foot stations. *Only required if a force main curves.*
GREASETRAP/OWS	Center of the structure
MANHOLE	Center of Rim

Invert Elevation– Invert elevation (+/- 0.1', bottom of manholes)
Material – Construction material

Example file format:

ID	Type	Northing	Easting	Elevation	Invert	Material
MH1	MANHOLE	751915.787	662437.91	1282.86	1277.71	CIP
CLEANOUT1	CLEANOUT	751927.504	662217.212	1285.37	1280.13	PVC

5.6.3 **Sewer Pipes**

The file shall be named "Sewer_Pipes" and shall contain the following data. There is one line of data for each sewer pipe.

If the pipe is a force main, values for Size, Material, USId, and DSId only need to be provided.

ID, Size, Material, USId, DSId, USInv, DSInv, Slope, Length (all on first line of the file)

Where:

ID – A sequential pipe number as noted on the as-built drawings (e.g. "SSP1").

Size – Inside pipe diameter (inches).

Material – Pipe material

USId – Upstream manhole number as shown on the as-built drawings (e.g. "MH1").

DSId - Downstream manhole number as shown on the as-built drawings (e.g. "MH2").

USInv – Invert elevation at the upstream end.

DSInv – Invert elevation at the downstream end. If downstream end is a drop connection, provide both elevations separated by a slash (e.g. 1100.05 / 1100.15).

Slope – The as-built grade of the pipe, expressed as a percentage and carried out to two decimal places.

Length – The length (in linear feet) of the pipe as indicated on the as-built carried out two decimal places.

Example file format:

ID	Size	Material	USID	DSID	USINV	DSINV	Slope	Length
SSP1	8"	PVC	MH1	MH2	1233.15	1228.41	6.02%	78.76

5.7 **REQUIRED DATA FOLDER FILE FORMAT**:

Example file format:

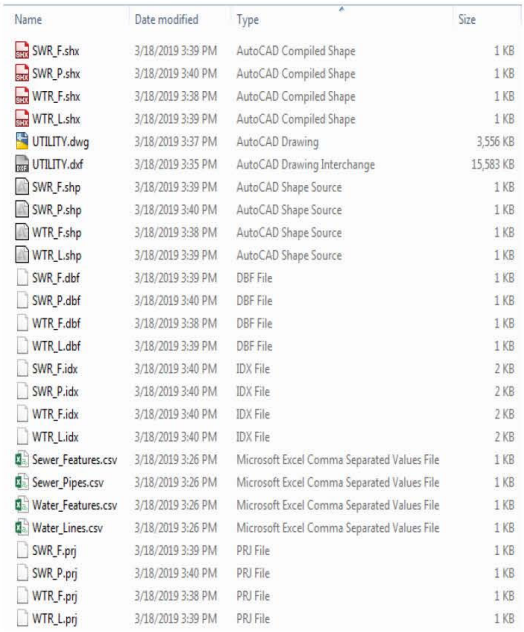

Name	Date modified	Type	Size
SWR_F.shx	3/18/2019 3:39 PM	AutoCAD Compiled Shape	1 KB
SWR_P.shx	3/18/2019 3:40 PM	AutoCAD Compiled Shape	1 KB
WTR_F.shx	3/18/2019 3:38 PM	AutoCAD Compiled Shape	1 KB
WTR_L.shx	3/18/2019 3:39 PM	AutoCAD Compiled Shape	1 KB
UTILITY.dwg	3/18/2019 3:37 PM	AutoCAD Drawing	3,556 KB
UTILITY.dxf	3/18/2019 3:35 PM	AutoCAD Drawing Interchange	15,583 KB
SWR_F.shp	3/18/2019 3:39 PM	AutoCAD Shape Source	1 KB
SWR_P.shp	3/18/2019 3:40 PM	AutoCAD Shape Source	1 KB
WTR_F.shp	3/18/2019 3:38 PM	AutoCAD Shape Source	1 KB
WTR_L.shp	3/18/2019 3:39 PM	AutoCAD Shape Source	1 KB
SWR_F.dbf	3/18/2019 3:39 PM	DBF File	1 KB
SWR_P.dbf	3/18/2019 3:40 PM	DBF File	1 KB
WTR_F.dbf	3/18/2019 3:38 PM	DBF File	1 KB
WTR_L.dbf	3/18/2019 3:39 PM	DBF File	1 KB
SWR_F.idx	3/18/2019 3:40 PM	IDX File	2 KB
SWR_P.idx	3/18/2019 3:40 PM	IDX File	2 KB
WTR_F.idx	3/18/2019 3:40 PM	IDX File	2 KB
WTR_L.idx	3/18/2019 3:40 PM	IDX File	2 KB
Sewer_Features.csv	3/18/2019 3:26 PM	Microsoft Excel Comma Separated Values File	1 KB
Sewer_Pipes.csv	3/18/2019 3:26 PM	Microsoft Excel Comma Separated Values File	1 KB
Water_Features.csv	3/18/2019 3:26 PM	Microsoft Excel Comma Separated Values File	1 KB
Water_Lines.csv	3/18/2019 3:26 PM	Microsoft Excel Comma Separated Values File	1 KB
SWR_F.prj	3/18/2019 3:39 PM	PRJ File	1 KB
SWR_P.prj	3/18/2019 3:40 PM	PRJ File	1 KB
WTR_F.prj	3/18/2019 3:38 PM	PRJ File	1 KB
WTR_L.prj	3/18/2019 3:39 PM	PRJ File	1 KB

5.8 **Material Quantity Table**

WATER SYSTEM IMPROVEMENTS	TYPE	QUANTITY
16" ENCASEMENT	LF	20
8" PVC WATER LINE	LF	1200
GATE VALVES (8")	EA	16
TAPPING SLEEVE & VALVE	EA	2
FIRE HYDRANTS	EA	8
45° BEND	EA	4
METER SETS	EA	36
SEWER SYSTEM IMPROVEMENTS		
8" PVC	LF	880
8" DIP	LF	40
CIP SMH	EA	10
CLEANOUT	EA	2
4" FM	LF	180

SECTION 6 INSPECTION

6.1 This section covers the requirements of inspection for the construction of water and sewer facilities.

6.2 The responsible ENGINEER who prepared and submitted the construction plans and specifications shall be responsible for construction layout, general direction, resident inspection and final inspection as described in more detail in the following sections. Continuous project responsibility shall be an express condition of plan approval. The ENGINEERS responsibility

shall extend through final inspection approval and submittal of "As-Built" drawings for acceptance of the project by the DEPARTMENT for maintenance.

6.3 All water and sewer facilities proposed shall be constructed by a licensed utility CONTRACTOR with the correct classification and inspected by the responsible ENGINEER as defined under definitions. Inspection shall consist of, but not be limited to, periodic visits to the construction site to observe the progress and quality of the executed work to determine if the work is proceeding in accordance with the approved plans and specifications and with the standards set forth by the DEPARTMENT. Any defects, deficiencies or irregularities in the work found by the ENGINEER or reported by the RESIDENT INSPECTOR shall be reported to the CITY INSPECTOR. Such action, as deemed appropriate, and as approved by the DEPARTMENT, shall be taken to correct such deficiencies. All work performed, shall at all times be subject to general inspection by the MANAGER or representative.

6.4 If deemed necessary by the DEPARTMENT to insure conformance with the approved plans and specifications, full time resident inspection may be required during all or part of the project and shall be performed by qualified personnel under the direct supervision of the ENGINEER. The name(s) of the RESIDENT INSPECTOR shall be furnished to the DEPARTMENT, any changes shall be notified to the DEPARTMENT in writing with all contact information included. It shall be the responsibility of the RESIDENT INSPECTOR to safeguard the DEPARTMENT'S interest by checking the construction work for compliance with the approved plans, specifications and other standards. The responsible ENGINEER shall provide an inspector for each location within a project that would use more than one pipe laying crew (e.g. two pipe laying crews on two different sites, two inspectors, one for each site). The CITY INSPECTOR or DEPARTMENT representative and the RESIDENT INSPECTOR shall witness all test procedures. The RESIDENT INSPECTOR shall provide a documented report of results, conditions, and time of test to the DEPARTMENT for its use and approval. If the CONTRACTOR intends to work outside of the normal work schedule or on a holiday, the RESIDENT INSPECTOR shall be required to be on the job site at all times and shall notify the DEPARTMENT. **Refer to Section 2.**

6.5 Any defects, deficiencies or irregularities shall be reported to the ENGINEER. A job diary shall be kept, outlining all aspects of the construction project and shall be made available to the DEPARTMENT upon request.

SECTION 7 CONSTRUCTION LAYOUT

7.1 The layout and staking of the construction work shall be completed by trained and qualified survey personnel under the supervision of the ENGINEER. Construction layout shall consist of staking (physical monuments) necessary to determine alignment and elevations to properly construct the proposed facilities. All depths shall be approved by the DEPARMENT during plan review.

SECTION 8 FINAL INSPECTION PROCEDURES

8.1 Before acceptance of new construction involving water lines or sewer main extensions, a physical site inspection will be scheduled by the ENGINEERING DEPARTMENT referred to as a "Final Inspection".

8.2 All lot corners shall be in place and witnessed by a survey marker. Said marker shall bear the number of the respective lot it represents. If lot lines do not coordinate with newly constructed utilities, it shall be the DEVELOPER'S responsibility to make the appropriate adjustments. If said situation exists at time of final inspection, approval shall be withheld until lot lines and utility locations coordinate. If these requirements have not been met, then final inspection shall be cancelled.

8.3 Water valve boxes will be to final ground elevation or paving grade centered directly over operator nut. Water valves and valve boxes shall be positioned in a manner to allow operability at all times. A continuous locator wire shall be present and operable in all valve boxes.

8.4 All water valve locations shall be verified by two reference measurements previously recorded by "As-Built" drawings. Water valve boxes shall be surrounded by a ground-level circular pre-fabricated concrete valve pad. Pre-fabricated circular valve pads shall be installed and grouted around valve box top section. All auxiliary fire hydrant valve boxes and valve pads shall have an 18" to 24" clearance from the top of the valve box to the fire hydrant cap and not interfere with cap removal when using a standard fire hydrant wrench.

8.5 Fire hydrants shall be set at bury line at finished grade. Hydrants shall be positioned 3' to 9' from back of curb or edge of any driving surface (measured from the steamer cap nut) or as directed by the DEPARTMENT during plan review.

8.5.1 All public fire hydrants shall be painted Industrial Safety Yellow. All private fire hydrants not maintained by the DEPARTMENT shall be painted Industrial Safety Red. Fire hydrants shall be painted prior to inspection unless otherwise instructed by the DEPARTMENT.

8.5.2 All fire hydrant assemblies shall have an auxiliary gate valve installed at the point of connection serving the hydrant. Hydrant lead lines in excess of 50' shall have an additional auxiliary gate valve installed at the fire hydrant or as designated by the DEPARTMENT during plan review.

8.6 Fire Department Connection (FDC) for each sprinkler or standpipe system shall be located not more than 100' from the nearest public fire hydrant connected to an approved public water supply. The FDC height shall be between 36" and 48" from the finished grade with a 30° bend and a 5" Storz connection. There shall be #10 tracer wire taped every 10 feet on the top of FDC line. Additional fire hydrants may need to be installed as required by the Fire Chief or his designated representative. With respect to hydrants, driveways, buildings and landscaping, fire department connections shall be so located that the fire apparatus and hose connected to supply the system will not obstruct access to the buildings for other fire apparatus. The location of the fire department connections and/or fire hydrants shall be approved by the Fire Chief or his designated representative. This fire hydrant will be solely used for the FDC. (**Or per newest Fire Department Ordinance**).

8.6.1 FDC's shall be located on address side of building and shall be approved by the Fire Department's Inspection Division prior to installation.

8.6.2 Butterfly valves are not approved for use in fire suppression systems. Only approved Post Indicator gate valves (P.I.V.) or wall indicator valves shall be utilized and approved. P.I.V. needs to be 30" to 36" above final grade to the sight glass. There shall be #10 tracer wire taped at 10' intervals on top of the fire line. PIV shall to be shown on construction plans.

8.7 Residential Meter boxes shall be set at 3" above proposed final grade or as directed by the DEPARTMENT during plan review. All meter setters inside the box shall not touch the sides of the box and shall be located where the turn-on and turn-off valves are easily accessible and operable by meter personnel. All meter sets shall have a minimum 3' stub-out service line for each service placed in such a manner to minimize disturbing meter box in the process of plumbing connection from pigtail to the customer's service line. All damage to meter boxes shall be the responsibility of the owner or builder after final acceptance has been completed. Meter personnel reserve the right to refuse placement of meters if setters or boxes are damaged, misaligned, or if finished grades have changed. All meter box lids shall have one or two pre-drilled holes, depending on the number of meter setters installed within the meter box. The holes are for use

with the DEPARTMENT'S meter reading system. Failure to install predrilled lids will lead to acceptance failure.

8.8 All meter vault plans and installations shall be approved by the DEPARTMENT during plan review. All meter vaults are to be installed by designated CONTRACTOR of the project. **Section 12.18.4**

8.9 All pipe and fittings shall meet the DEPARTMENT'S specifications. All DI pipe shall be cement lined and tar coated, all fittings shall be epoxy coated. Meter by-pass material shall be rigid copper or DI pipe. Valves shall meet specifications herein. Vault depth shall not exceed 5' unless approved by the DEPARTMENT.

8.10 The vault cover shall be removable to allow full access to the vault. Four recessed lifting points shall be provided. An access door shall be installed in the center of the vault. The lid shall have pre-drilled holes for meter capability. Approved doors shall be similar or equal to Bilco or Halladay and shall be a minimum of 36" x 36".

8.11 Water meters shall not be installed within buildings without prior approval by the DEPARTMENT. If approved, meters inside buildings shall meet the following criteria, **Section 8.12,** which shall be furnished and guaranteed by owner of future development prior to approval.

8.12 Meters must have capability via outside of building and accessible to meter personnel, (no obstructions). Meters 4" and larger are to be purchased by OWNER with direction of the DEPARTMENT.

8.13 Sewer stub-outs installed for a domestic sewer connection shall be marked and made visible by installing a metal tee post painted green at the precise location above said sewer line end, at a height of 3' exposed above ground and buried a minimum of 3' below ground.

8.14 All trees planted in large scale projects and subdivisions shall be planted at a minimum of 5' from any water or sewer mains.

8.15 ENGINEER shall contact the DEPARTMENT by email to schedule televising of sewer mains and tracer wire inspections before roadways have been completed and before 1st full inspection is requested. Full CCTV inspection shall be completed and 1st tracer wire inspection shall be completed before final inspection. ENGINEER shall provide revised "as-built" drawing of utility sheet with sewer profile before testing will be scheduled.

8.16 The OWNER/CONTRACTOR/DEVELOPER shall pay <u>any</u> outstanding (3 or more months) invoice issued by the Water Utilities Office prior to final acceptance of the current project. This includes previous projects, water/sewer line repairs, fire hydrant contracts, discontinue services, replace meter tiles, re-inspection fees, survey fees, etc. – Does not include Utility Bills.

8.17 The DEPARTMENT shall charge for each re-inspection. **Refer to current fee ordinance**.

SECTION 9 GENERAL REGULATIONS FOR CONSTRUCTION PURPOSES

9.1 **Refer also to current Transportation Department Specifications.**

9.1.1 This section outlines minimum construction procedures and standards for the installation of water and sewer extensions.

9.1.2 Any CONTRACTOR/DEVELOPER/CUSTOMER/RESIDENT that requests the use of a hydrant meter will be required to fill out a Contract and pay for a Fire Hydrant Meter at the Water Utilities Office. The CONTRACTOR/DEVELOPER/CUSTOMER/RESIDENT of the City of Bentonville

will determine the location for the hydrant meter with the DEPARTMENTS approval. The current contract may also be found online on the City of Bentonville Water Utilities Department website.

.

9.2 UNDERGROUND UTILITY NOTIFICATION

9.2.1 It is the CONTRACTOR'S responsibility to notify **"Arkansas One-Call" (1-800-482-8998 or 811)** two days in advance of any excavation. Location of utility requests for surveying purposes will be charged to the requesting party. A notice of at least 2 working days (normal work schedule) should be expected before locates are performed by the DEPARTMENT. **Refer to current fee ordinance.**

9.3 WATER OUTAGES

9.3.1 In the event that the CONTRACTOR must have a water main out of service in order to connect to the water system, the CONTRACTOR shall notify the DEPARTMENT of impending loss of service at least 5 days in advance. All shutdowns shall be coordinated and scheduled by the DEPARTMENT. Notifying customers will be accomplished by means of approved door hanger notices supplied by the DEPARTMENT, however it is the CONTRACTOR'S responsibility to notify the customers a minimum of 24 hours ahead of time. **Section 13.1.2**

9.4 TRENCH DEWATERING

9.4.1 The CONTRACTOR shall install dewatering systems as necessary that will be required to construct the proposed utilities in a manner that will prevent groundwater contamination. Must meet current City of Bentonville Storm Water Regulations. For 12" and larger pipe sizes, ground water encountered shall be prevented from migrating along the trench with either clay or flowable fill mitigation dams and wrapping pipe bedding with filter fabric as approved by the DEPARTMENT, in accordance with geotechnical recommendations.

9.5 LOCATION, ALIGNMENT AND GRADE

9.5.1 The pipe, fittings, valves, fire hydrants, meter boxes, manholes, and other appurtenances shall be constructed to conform to the location, line size and material, and grades specified or as shown on the Plans.

9.5.2 Valves and fire hydrants shall be set with operating stem and nut plumb.

9.5.3 Horizontal and vertical control points will be established along or adjacent to the construction area. It shall be the responsibility of the CONTRACTOR to make necessary measurements from these control points in order to maintain the proper alignment and grade of the structures. The CONTRACTOR shall preserve all stakes and markers established by the ENGINEER.

9.5.4 In a residential or commercial subdivision, the water and sewer mains will be placed at 12' back of curb or 2' behind master plan street right-of-way. The manholes and fire hydrants will be placed on the lot line and water and sewer services will be placed 3' off the lot line. Water services that are on the same side as the water main will be placed at 14' back of curb and the water services across the road from the water main will be placed in the green space centered between the curb and proposed sidewalk. The 1" tubing going to the meter set will be installed without excess tubing wrapping around the meter tile. The sewer services are to extend to the building setback or the back edge of the utility easement. The fire hydrants that are placed on the lot line need to meet the back of curb measurement that is shown on the fire hydrant installation **Details W04 and W05**. The manholes that are street side need to have a final rim elevation that is 4" to 6" above final grade and any manholes that are at the back of lots or along drainage areas need to be 12" above final grade. Please keep in mind that the maximum vertical extension above the cone is 24". If the vertical extension is

greater than 24" it will be necessary to take the cone off, extend the walls, re-pour the cone and do a vacuum test on the manhole. Any variation from the above described layout needs to be submitted to the DEPARTMENT for approval during the plan review process.

9.6 **PUBLIC TRAVEL**

9.6.1 Traffic control shall be in accordance with the City of Bentonville Minimum Standard Specification for Streets.

9.7 **SURFACE & SUBSURFACE STRUCTURES LOCATION AND PROTECTION**

9.7.1 The DEPARTMENT does not guarantee the accuracy or correctness of locations of subsurface structures. It shall be the responsibility of the CONTRACTOR to satisfy himself as to the actual location and nature of subsurface structures.

9.7.2 The CONTRACTOR shall make necessary exploratory excavations to determine the location of underground structures such as pipes, drains, conduits, and other structures. The CONTRACTOR shall be responsible for contacting the respective utility of such structures before excavating in the vicinity of these structures and shall be guided by their instructions.

9.7.3 The CONTRACTOR shall provide adequate protection and support for all surfaces and subsurface structures or other facilities encountered during the progress of the work. Whenever such structures or facilities are in the same location as the proposed pipeline or appurtenances thereto, the CONTRACTOR shall relocate or reconstruct or cause to be relocated or reconstructed, the structure or facility to the satisfaction of the DEPARTMENT and utility facility owner. Whenever requested by the DEPARTMENT or utility owner, the CONTRACTOR shall provide drawings and other plans for supporting or otherwise safeguarding surface and subsurface structures or other facilities which, in the opinion of the DEPARTMENT, or utility or facility owner, may be damaged as a result of the CONTRACTOR'S work.

9.7.4 The CONTRACTOR shall not stop or impede the flow in any pipe, sewer, surface or subsurface drain without making provisions for diverting the flow to the satisfaction of the DEPARTMENT.

9.7.5 If any utility facility or structure is damaged during the progress of the work, the CONTRACTOR shall immediately notify the appropriate owner. Repairs shall not be made by the CONTRACTOR without the prior approval of the utility facility or structure owner. The CONTRACTOR shall pay utility owners for the cost of repairing, relocating or replacing any facilities damaged by the CONTRACTOR. In addition, the CONTRACTOR shall provide all assistance available to the utility involved in making repairs under emergency conditions.

9.7.6 The CONTRACTOR shall not operate any control valve or fire hydrant in the existing water distribution system without the approval of the DEPARTMENT.

9.7.7 All existing water mains, services, appurtenances and bends shall be properly restrained in such manner so as to prevent displacement before excavating behind these appurtenances.

9.8 **PROTECTION OF VEGETATION**

9.8.1 The CONTRACTOR shall not remove or disturb any vegetation except that required for the execution of the work.

9.8.2 Unless otherwise specified in these specifications or in the plans, the CONTRACTOR shall replace all sod, shrubs, bushes, trees, and flowers disturbed or removed, that are located upon improved or landscaped public and private property. The CONTRACTOR shall replant vegetation and re-

landscape or cause such to be performed throughout the work area as soon as possible after the water lines and appurtenances have been installed. All vegetation damaged during or after removal shall be replaced with healthy vegetation of the same kind or type. All plants shall be replanted in the original location. The CONTRACTOR shall maintain all such replanted vegetation by the application of water, fertilizers and topsoil. The vegetation shall be cultivated to prohibit the growth of foreign vegetation until a "well developed" root system has been established and transplanted vegetation has overcome the "shock" resulting from transplanting. If any vegetation dies or becomes unhealthy, it shall be replaced by the CONTRACTOR. The contour of the ground shall be left as near the original contour as possible.

9.8.3 The CONTRACTOR shall stabilize all areas where ground surface has been disturbed by water and sewer construction activities to as good or better condition.

9.9 EXCAVATION AND PREPARATION OF TRENCH

9.9.1 The CITY INSPECTOR and "Arkansas One-Call System" shall be contacted before excavation shall begin. Also, excavations shall be in accordance with the Arkansas Department of Labor requirements.

9.9.2 All trench excavation side walls greater than 5' in depth shall be sloped, shored, sheeted, braced or otherwise supported by means of sufficient strength to protect the workmen within them in accordance with the applicable rules and regulations established for construction by OSHA and ADL.

9.9.3 Before installation of pipe and appurtenances, the trench bottom shall be graded so uniform support of the pipe and appurtenances are provided. Shallow depressions shall be made in the trench bottom to accommodate bell ends. It is a requirement for bell or coupling holes to be excavated where no part of the load is supported by bells, couplings, or fittings.

9.9.4 All trenches shall be backfilled immediately after proper installation of the pipeline, tracer wire, embedment, and appurtenances. It may be necessary to backfill only a portion of the trench in order to allow adequate curing of concrete thrust blocking.

9.9.5 The trench width may vary and depend upon the depth and the nature of the excavated material encountered. The trench shall be of ample width to permit the pipe to be laid and jointed properly and the backfill to be placed and compacted properly. The minimum width of non-sheeted trench shall be at least 1' greater than the nominal diameter of the pipe. Ledge rock, boulders, large stones, and other rock formation shall be removed to provide a clearance of at least 6" on each side of pipeline and appurtenances up to and including 24" in diameter.

9.9.6 The bottom of the trench shall be prepared so as to provide a uniform and continuous bearing and support for the pipe on solid undisturbed or compacted soil. The trench shall be excavated to at least the depth specified as follows beyond the specified grade when the following described conditions exist:

9.9.7 When the bottom of the trench is at sub-grade and is found to be unstable or includes ashes, cinders, refuse, other organic material, or large pieces of inorganic material, that, in the judgment of the ENGINEERING DEPARTMENT, should be removed, the CONTRACTOR shall remove all such material to the extent required by the ENGINEERING DEPARTMENT

9.9.8 When the excavation is carried below or beyond that specified or required due to conditions described in **Section 9.9.7**, the CONTRACTOR shall backfill the trench to the proper grade with approved backfill material specified by the DEPARTMENT, unless permitted by the

DEPARTMENT to install the lines and appurtenances at the undercut grade. The backfill shall be accomplished in accordance with that specified by the DEPARTMENT or elsewhere herein.

9.9.9 The use of trench-digging machinery will be permitted except in places where operations of same will cause damage to trees, buildings, or other existing structures above or below the ground; in which case hand methods shall be employed.

9.9.10 Blasting for excavation will be permitted only after the CONTRACTOR secures the approval of the Fire Department and DEPARTMENT and only when proper precautions are taken for the protection of persons and property. The Fire Department will approve the hours of blasting. Any damage caused by blasting shall be repaired by the CONTRACTOR at their expense. The method of transporting, handling, and storage of explosives and blasting procedure shall conform to Federal Regulations, local and state laws, municipal ordinances and be approved by the Fire Department in advance.

9.9.11 The CONTRACTOR shall comply with all federal, state and local laws or ordinances with respect to obtaining permits, the deposit of bonds and all other provisions of such laws and ordinances.

9.9.12 In order to prevent caving when excavating in sand, gravel, sandy soil, or other unstable material shall be adequately sheeted and braced. Where sheeting and bracing is used, the trench width may be increased accordingly. Trench sheeting shall remain in place until the pipe has been laid and jointed. Where slides or cave-ins occur, the CONTRACTOR shall, at his expense, provide proper bedding and support for the pipe to maintain line and grade.

9.9.13 All excavated material stored on the job site shall be stockpiled in a manner to avoid blocking driveways, streets or sidewalks and will not endanger workers, pedestrians or travelers. Gutters shall be kept clear or other satisfactory provisions shall be made for street drainage. If local conditions permit their re-use, all surface materials suitable for re-use in restoring the surface shall be kept separate from the general excavation material. Excess material and debris shall be removed promptly.

9.9.14 The CONTRACTOR shall maintain all temporary surfaces in good condition until permanent repairs are complete.

9.10 **WORK PERFORMED BY DEPARTMENT**

9.10.1 The intent of these specifications is for the CONTRACTOR to do all installation of new water and sewer infrastructure. All water and sewer taps to the existing Water Distribution or Wastewater Collection Systems shall be made by the DEPARTMENT as outlined in **Section 11.10**.

9.10.2 If damage occurs to the water or wastewater collection systems during construction, the DEPARTMENT, with its labor forces, will make all repairs to these systems. The CONTRACTOR may be requested to assist in the repairs to reduce charges for damages occurred.

9.10.3 If the DEPARTMENT assists the CONTRACTOR for any reason, the CONTRACTOR shall pay for the cost of this assistance, based on the cost of labor, equipment, materials and overhead.

9.11 **CONFINED SPACES**

9.11.1 The CONTRACTOR'S attention is called to the requirements for entry into confined spaces as defined by the Current Edition of the OSHA Standard for Permit Required Confined Spaces which is specifically incorporated herein by reference.

9.11.2 CONTRACTOR'S responsibilities for entry into any Permit Required Confined Space are:

(a) CONTRACTOR shall obtain from DEPARTMENT any available information regarding any hazards of entry operations for a Permit Required Confined Space.
(b) When both DEPARTMENT and CONTRACTOR'S personnel are to work in or near a Permit Required Confined Space, CONTRACTOR shall coordinate such work with DEPARTMENT.
(c) CONTRACTOR shall inform DEPARTMENT of type of Permit Required Confined Space Program used by his employees.
(d) CONTRACTOR shall inform DEPARTMENT of any hazards confronted or created in a Permit Required Confined Space.
(e) CONTRACTOR is responsible for having knowledge of and complying with all requirements of OSHA's Standard for Permit Required Confined Spaces.

9.12 **PUBLIC EMPLOYEES RIGHT TO KNOW ACT**

9.12.1 The CONTRACTOR'S attention is called to the requirements of the Hazard Communication Standard adopted by OSHA and State of Arkansas Act 556 of 1991: Public Employees Chemical Right to Know Act.

9.12.2 The CONTRACTOR is reminded that other obligations are imposed upon employers by the above Standard and Act.

9.13 **CLEAN-UP OF JOB SITES**

9.13.1 The CONTRACTOR shall remove all materials, equipment, tools, temporary structures, barricades, trees and other vegetation that have been cut or have died as a result of the work from both public and private property along the job site.

SECTION 10 GENERAL INSTALLATION INFORMATION AND PROCEDURES

10.1 **HANDLING PIPELINE MATERIALS**

10.1.1 The CONTRACTOR shall handle the material with the utmost care and in a manner to prevent damage to the materials, material coating and lining during loading, hauling, unloading, and installation operations. Hooks, chains, or cables shall not come in contact with the exterior/interior of pipeline materials. It is recommended to use approved nylon straps or approved clamps to handle pipeline material. Material damaged shall be replaced at the CONTRACTOR'S expense.

10.1.2 Hooks shall not be in contact with the pipe interior and to the extent possible the interior of the pipeline materials shall be kept free from dirt and foreign matter.

10.1.3 Pipeline materials, especially valves, hydrants and fittings shall be drained and stored in a manner to protect them from damage by freezing. Under no circumstances shall pipe or accessories be dropped or dumped into the trench.

10.1.4 Proper implements, tools and facilities shall be provided and used by the CONTRACTOR for the safe and convenient execution of work.

10.1.5 All foreign matter or dirt shall be removed from the inside of the pipe and appurtenances before lowering into the trench and the pipe interior shall be kept clean during and after laying. A swab shall be kept in the water line as long as the pipe is being laid. Care shall be taken to prevent dirt from entering the joint space. When pipe laying is not in progress, the open ends of the pipe shall be closed by installing a plug or cap of sufficient design to prevent trench water, foreign matter, and dirt from entering the pipeline.

10.1.6 Cutting of the pipe for inserting valves, fittings or closure pieces shall be done in a neat and workmanlike manner without damage to the pipe or pipe lining. Torch cutting is not permitted. All pipes shall be cut at an angle of 90° to the pipe centerline. Cutting at other angles to provide greater deflections at the joints shall not be permitted. Field welding or welding except by the pipe manufacturer shall not be permitted.

10.1.7 Unless otherwise approved or directed by the DEPARTMENT, all pipe shall be laid with bell ends facing the direction of laying; and for lines on an appreciable slope, bells shall face upgrade. Steep slope protection shall be provided in accordance with 10 States Standards.

10.1.8 No pipe shall be laid in water, or when the trench condition or the weather is unsuitable for such work, except by permission of the DEPARTMENT.

10.2 **PIPE EMBEDMENT**

10.2.1 This section covers materials used for embedment of water and sewer mains. Unless otherwise specified herein or shown on the plans, embedment materials shall be restricted to Class #67 type bedding as modified and described below with a maximum aggregate size of ¾". Installation of bedding shall be 6" under pipe and 6" over pipe. CONTRACTOR'S must provide proof of material to match required specifications.

Crushed aggregate conforming to the ASTM C33, gradation 67 and as follows:

Crushed aggregate sized from maximum ¾" to No. 8 sieves:
100% passing the ¾" sieve (maximum aggregate size ¾")
20 to 55% passing the 3/8" sieve
0 to 10% passing the No. 4 sieve
0 to 5% passing the No. 8 sieve

The required modification of the ASTM C33, gradation 67 is the clarification and potential additional requirement of 100% passing the ¾" sieve.

10.3 **COMPACTION**

10.3.1 All pipeline backfill shall be placed in layers of appropriate thickness and compacted using a mechanical, hydraulically-powered vibratory trench compactor or other equivalent equipment. All trench backfill (except under paved areas) shall be compacted to 95% (minimum) standard proctor density of that of the adjacent undisturbed soil Trench backfill is subject to density test as deemed necessary. In areas where the trench crosses a street, parking lot or driveway, the material shall be compacted as specified in **Section 10.3.2** to a minimum of 95% of that of the adjacent soils.

10.3.2 SB-2 crushed stone trench backfill where required shall be compacted to 95% modified proctor density (ASTM D1557). A minimum of one compaction test per crossing is required.

10.3.3 Ditch line compaction shall follow immediately after trench backfill. Topsoil shall be placed and shaped leaving the ditch line slightly rounded above existing grade.

10.4 **JOINTING PVC & DUCTILE IRON PIPE AND FITTINGS**

10.4.1 Prior to jointing the pipe and/or fittings, the plain ends of the pipe and the bells of the pipe and fittings shall be thoroughly cleaned using a soapy water and cloth, removing all foreign materials from the bells, especially the gasket seats. Any burrs or imperfections in that part of the plain end or bell, which will be in contact with the gasket, shall be removed.

10.4.2 The clean rubber gasket shall be inserted in the bell and a thin film of lubricant shall be applied to the inside surface of the gasket. The cleaned plain end shall initially be entered in the bell straight.

10.4.3 The plain end shall be pushed inside the gasket and bell until it strikes the end of the interior of the bell, after which the end of the pipe shall be moved sideways or as specified by the manufacturer's requirements to move it slightly away from home to allow for expansion and to provide flexibility to the completed line.

10.4.4 Pipe lubricants specified by the pipe manufacturer shall be used. No substitutes shall be made.

10.4.5 When connecting the pipe or fittings according to manufacturer's requirements, care shall be exercised to avoid damage to where the pushing device or machine part contacts the pipe. A wood block or suitable pad shall be placed between the pipe and that part of the pushing device which contacts the pipe and/or fittings.

10.4.6 All plain ends that enter a push-on bell shall be beveled as specified by manufacturer requirements. All cut pieces or ends of pipe of other classifications shall be so beveled.

10.5 JOINTING FLANGED PIPE & FITTINGS

10.5.1 The faces of all flanges shall be thoroughly cleaned and all burrs or imperfections removed and brushed with a steel brush.

10.5.2 Gaskets between flanges shall be AWWA approved of 1/16" minimum thickness.

10.5.3 Care shall be taken to prevent strain of the flanges. All bolts and nuts shall be cleaned and lubricated prior to tightening. Bolts on opposite sides shall be tightened alternately to the torque listed in **paragraph 10.6.4** herein.

10.6 JOINTING MECHANICAL JOINT PIPE & FITTINGS

10.6.1 Prior to jointing the pipe and/or fittings, the plain ends of the pipe and the bells of the pipe and fittings shall be thoroughly cleaned using a soapy water and cloth, removing all foreign materials from the bells, especially the gasket seats. When a pipe is being installed in a fitting, the factory bevels shall be removed.

10.6.2 The DI retainer glands shall be placed on the plain end of the pipe or fittings, followed by the rubber gasket, which has been thoroughly cleansed and lubricated with the soapy water.

10.6.3 The plain end of the pipe shall be placed in the bell, to which connection is to be made, and shouldered in back of the bell. The rubber gasket shall be advanced into the bell and seated in the gasket seat; the follower ring shall next be brought into contact with the rubber ring, and all bolts entered and nuts started.

10.6.4 Joints shall be made tight by advancing the nuts with a wrench 180° apart until a tight joint is made. The CONTRACTOR shall provide a "torque wrench" suitable for measuring tension on bolts for at least such a time as the workmen making the joints have gotten the "feel" of the required tension. At no time should handles longer than those supplied by the wrench manufacturer be permitted. The torque range shall be as follows or as directed by the manufacturer:

5/8" bolts	45 - 60 ft. lbs.
3/4" bolts	75 - 90 ft. lbs.
1" bolts	85 -100 ft. lbs.
11/4" bolts	105 -120 ft. lbs.

10.6.5 The rubber gasket and joint bolts of mechanical joint retainer glands shall be installed in accordance with above section. Set screws shall be tightened evenly to approximately 75-foot pounds or as directed by the manufacturer.

10.6.6 The entire follower, retainer gland and all bolts shall be encased in polyethylene material in accordance with **Section 13.11**.

10.7 PIPE DEFLECTION

10.7.1 During the pipe laying operation, deflections at joints shall not exceed the amounts indicated by the manufacturer's recommendations.

10.8 PIPE MATERIAL

10.8.1 For 12" and larger water and sewer pipes with pipe cover exceeding 14', the DEPARTMENT reserves the right to request geotechnical and design calculations, in accordance with AWWA design manuals. The DEPARTMENT shall be immediately notified if field conditions differ from the design and geotechnical.

SECTION 11 WATER DISTRIBUTION SYSTEM GENERAL INFORMATION

11.1 No water main shall be less than 8" in diameter unless prior approval is obtained in writing from the DEPARTMENT. Variances will be considered, on a case-by-case basis for the reduction of water main sizes.

11.2 The minimum cover over water mains 8" and less shall be 4' minimum. Mains larger than 8" shall have a minimum cover of 5' or as approved by the DEPARTMENT. The minimum cover over water services shall be 24" or as approved by the DEPARTMENT. Sewer mains shall have a minimum cover of 3'. Minimum cover shall be measured from the ground surface or the surface of the permanent improvement to the top of the barrel of the pipe, whichever is greater. All depths of water and sewer mains shall be approved in advance by the DEPARTMENT.

11.3 In any case of signs, fencing or structures installed near a water line, at least 5' of separation between the water line and structure must be maintained. In any case of a permanent building installed near a water line, at least 10' of separation must be maintained. Any deviation in separation minimums must get the approval of the DEPARTMENT prior to installation.

11.4 Each component within a project, i.e. water valves, fire hydrants, pipe, etc. shall be homogenous throughout the project and by a single manufacturer. All materials shall be domestically made. All utility mains shall be extended to property lines on all stubbed out streets. Any water main within a project that is stubbed out shall terminate at a fire hydrant assembly with a restrained gate valve connected to the downstream side of the tee. The purpose for the stub-out is to allow for connection to the utility without disturbing the existing development.

11.5 Water easements will be a minimum 20' in width or as directed by the DEPARTMENT. Easements shall be dedicated as utility easements unless required to dedicate for the exclusive use of the water mains. Water lines must be located within the center of the easement or as directed by the DEPARTMENT.

11.6 Fire hydrants shall be installed so that no distance shall be greater than 500' apart within residential areas and 300' apart in commercial or mixed developments or as directed by the Fire Department during plan review. Placement of fire hydrants in rural areas shall be installed so that no distance shall be greater than 1000' apart or as directed by the DEPARTMENT. Densely constructed or

industrial sites may need to meet criteria set forth by Fire Department requirements. All considerations involving the physical locations of FDC connections shall be regulated by the Fire Department. New construction of buildings must have a working fire hydrant before structure construction begins. Subject to approval from the Fire Department. Fire hydrants placed in subdivisions need to be installed at the lot line to avoid conflicts with driveways. In a situation where a fire hydrant lead is over 50' an auxiliary gate valve shall be installed at the fire hydrant.

11.7 End of main fire hydrant locations for main extensions shall be approved by the DEPARTMENT during plan review.

11.8 The hydraulic analysis, design flows, residual pressures and static pressure of the proposed mains shall be provided as requested by the DEPARTMENT. Additional design data may be required if, in the opinion of the DEPARTMENT, it is necessary for review prior to approval of the plans.

11.9 Valves should be located not more than 500' intervals within residential areas and 300' intervals within commercial areas or as required by the DEPARTMENT. Valves shall be provided at each quadrant of intersecting mains so as to enable two directions of flow throughout the designed system during times of maintenance or emergencies. Valves shall be installed in a manner that connects them to all fittings with an anchor coupling.

11.10 All taps on existing mains shall be performed by the DEPARTMENT. Request for taps to be performed by the DEPARTMENT shall be made at least 24 hours in advance. CONTRACTOR shall provide material for all water taps greater than 2". CONTRACTOR shall be responsible for excavation, installation of valve and tapping sleeves, and shall provide 2 pressure tests prior to the DEPARTMENT'S execution of tap. 2 Pressure Tests, as defined herein, at 200 psig with no loss for 15 minutes or in areas of higher pressure test to 1 ½ times the operating pressure with no loss for 15 minutes and shall be witnessed and recorded by the CITY INSPECTOR or DEPARTMENT representative. The first pressure test shall be with the valve closed and without a test plug, and the second pressure test shall be with the valve open and a test plug. Testing equipment shall be inspected by CITY INSPECTOR and shall be in proper working order at time of test. Tap locations on pipe sizes 6" to 12" will be no closer than 24" to the back end of the bell or collar of the pipeline and no closer than 24" from the insertion line on the spigot end of the pipeline. Water lines larger than 12" tap locations will be no closer than 36".

11.11 In no case shall a structure that is independently owned be allowed to connect to the same water service of another independently owned structure. Plumbing systems of two independently owned structures or properties shall not be served by the same water meter. Each individually owned plumbing system will have its own water meter to serve water for its domestic or commercial use. Each independently owned property or structure shall have a direct connection to public water and sewer. A private easement is not an acceptable means to access public water or sewer for new structures or lots. Only when approved as part of the zoning for a planned development shall two properties be served from the same 1" service line suppling water to a double meter set installed on the property line of the adjoining properties. These double meter set installations will only be allowed in these approved developments in cases where no lawns exist and/or a community irrigation system is being provided. All water and sewer service lines shall be inspected by the Bentonville Building Inspection Department.

11.12 All water meter boxes and services shall terminate as indicated on the approved plans or as directed by the DEPARTMENT. The DEVELOPER will provide 1" water service piping to each lot with a minimum single meter set and box. All service lines shall be a minimum size of 1". All 1" service lines shall include 10 gauge solid strand copper tracer wire. All service lines installed shall be backfilled with class 67 bedding as outline in **Detail W02.** Service tap locations on pipe sizes 6" to 12" will be no closer than 24" to the back end of the bell or collar of the pipeline. Water lines larger than 12" service line taps will be no closer than 36".

11.13 All water services shall include a meter yoke, meter box, and lid. All meter sets shall have a minimum 3' service "pig-tail" on the customer's side of the meter connection for each water service. The "pig-tail" shall be placed in such a manner to minimize disturbing meter box in the process of plumber connection. Ensure fiber washers are installed in all meter yokes. All 1" tubing installed for new water services will be one piece installation, no couplings or joining appurtenances permitted unless approved by the DEPARTMENT. In such cases that new 1" water services are to be installed across future streets, 2" conduit shall be installed from 1' back of curb to 1' back of curb on the opposite side of the street. The 1" tubing and 10 gauge tracer wire shall be installed within the conduit. Only one service shall be installed in each conduit. Disclaimer: "pig-tail" belongs to property owner and is not the responsibility of the CITY. Any residential lots in new developments that are 6500 square feet or larger will be required to install a double meter set for the lot and provide a 2 hole lid for the meter box.

11.14 For information related to cross-connection control and backflow prevention rules and regulations, refer to the City of Bentonville's Cross Connection Control Program Manual. **Refer to Cross Connection Control Manual – Sections 20 - 27.**

11.15 The utility main that is stubbed out shall terminate at a manhole for a sewer main or a fire hydrant assembly with a restrained gate valve connected to the downstream side of the tee for a water main. The purpose for the stub-out is to allow for connection to the utility without disturbing the existing development.

SECTION 12 WATER DISTRIBUTION SYSTEM MATERIALS

12.1 ALL MATERIALS SHALL BE DOMESTICALLY MADE

12.1.1 These material specifications are intended to set a standard of quality and design for all materials used in the construction of water mains and appurtenances. Materials shall be of types listed in these specifications. Materials not specifically authorized in these specifications are forbidden for use in the system unless prior approval is obtained in writing from the DEPARTMENT prior to construction.

12.1.2 The DEPARTMENT must approve all material prior to installation. All materials shall meet AWWA specifications.

12.2 PIPE

12.2.1 All pipe furnished shall be designed for the distribution of potable water. Lubricant furnished for lubricating joints shall be non-toxic, shall not support the growth of bacteria, shall have no deteriorating effects on the gasket or pipe material, and shall not impart taste or odor to water. The lubricant container shall be labeled with the manufacturer's name. The DEPARTMENT will determine type and size of pipe to be installed within the water distribution system during plan review.

12.2.2 In areas where the static operating water pressure is 150psi or greater or installation of water mains are within 10' of any permanent structure the DEPARTMENT reserves the right to require ductile iron water piping be installed. Request and approval will be made in the plan review process.

12.3 POLYVINYL CHLORIDE (PVC) WATER PIPE (4" – 12") (14" - 48")

12.3.1 PVC pipe in sizes 4" – 12" shall meet the requirements of AWWA C-900 DR-14 and comply with ASTM D1784 pressure classification rated class 305. Pipe joints shall be integrally molded bell ends in accordance with ASTM 3034 with factory supplied elastomeric gaskets and lubricant. Pipe

to bear NFS-61 seal of approval for potable water. The pipe shall be approved by the Underwriter's Laboratories (UL) for use in underground fire protection service. The pipe shall be extruded from PVC meeting the requirements of cell classification 12454-B as defined in ASTM-D-1784, PVC compounds. The pipe shall be manufactured to cast iron size (C.I.) outside dimensions. Pipe shall bear identification markings that will remain legible during normal handling, storage and installation. Marking on pipe shall include the following and shall be applied at intervals of not more than 5':

(a) Nominal size and OD (DR-14)
(b) PVC
(c) Dimension ratio (DR-14)
(d) AWWA pressure class (for example PVC1120 or PC200)
(e) AWWA designation numbers (AWWA C-900)
(f) Manufacturer's name or trademark and production code
(g) Seal (mark) of the testing agency that verified the suitability of the pipe Material for potable water service. (for example NSF-61 or ULFM)

12.3.2 PVC pipe in sizes 14" – 60" shall meet the requirements of AWWA C-900 DR-21 and comply with ASTM D 1784 pressure classification rated class 200.

12.4 **DUCTILE IRON PIPE (DI)**

12.4.1 The pipe shall have a cement mortar lining and seal coat in accordance with ANSI/AWWA C104 A21. The pipe and flanges shall conform to ANSI/AWWA C111/A21, Class 50 rated at 350 psi unless otherwise specified. Tapping DI pipe shall conform to ANSI/AWWA C600.

12.5 **DUCTILE IRON PIPE 4" - 54"**

12.5.1 DI pipe shall conform to ANSI/AWWA C104/A21 and shall have a cement mortar lining and seal coat conforming to ANSI/AWWA C104/A21. Joints shall conform to ANSI/AWWA C111/A21 and may be mechanical joint or push-on joint unless otherwise specified. The minimum thickness class shall be Class 50 rated at 350 psi unless otherwise specified.

12.6 **POLYETHEYLENE PIPE (PE)**

12.6.1 All Polyethylene pipe shall conform to ANSI/AWWA C901-17 with a MINIMUM pressure class rating of 200 psi and a DR rating of 9. All service line pipes will be 1" unless otherwise specified by the DEPARTMENT.

12.6.2 In no case shall stainless steel inserts be used with the installation of poly tubing service lines. If inserts are needed, the use of a plastic insert will be acceptable and approved at product submittal. In no case shall the insert extend passed the compression cap of the corporation stop when fully tightened.

12.7 **COPPER PIPE**

12.7.1 Copper service pipe shall be 1" Type "K", soft tempered, seamless, for underground installation, in accordance with ASTM B88 and Federal Specifications WW-T-799.

12.8 **ENCASEMENT PIPE**

12.8.1 Smooth Wall Steel Encasement Pipe - Pipe shall conform to ASTM A-139, ASTM A-21.11 or AWWA C200. The metal thickness shall be as shown in the Proposal or Plans.

12.8.2 Casing spacer systems shall be manufactured in two pieces, made from heavy gauge T-304 stainless steel with Polymer Plastic Runners (Teflon). Spacers shall be a Cascade Casing Spacer manufactured by Cascade Waterworks Manufacturing Company or equal conforming to ASTM ratings, approved by AWWA and the DEPARTMENT. Casing and utility pipes shall be sealed with synthetic rubber end seals. **Detail GWS01**.

12.8.3 Any bell located within an encasement pipe shall be restrained by an approved method.

12.9 **FITTINGS**

12.9.1 DI fittings shall be designed for working pressure of at least 350 psi, shall be DI and shall conform to ANSI/AWWA C153 A21. Joints shall be mechanical joint conforming to ANSI A21.11. All fittings shall be furnished with gaskets and mechanical joint fittings shall be furnished with bolts, nuts and retainer glands. All fittings shall be ANSI/AWWA C550 AND C116 6-8 mil Nominal Thickness Fusion Bonded Epoxy Coated inside and out. Fittings shall be manufactured by U.S. Pipe "TRIM TYTE", Tyler, Star Pipe Products, or approved equal. Any alternate manufacturer shall require DEPARTMENT approval prior to installation.

12.9.2 Mechanical Joint Retainer Glands shall be installed on all water line valves bends and couplings. Mechanical Joint Retainer Glands for DI shall be made from DI and shall be designed for a working pressure of at least 200 psig. The set screws shall be extended through the outer most part of the gland. Glands shall be designed to standard mechanical joint fittings (AWWA C111). The minimum number and minimum size set screws shall be as follows, or approved equal. Any alternate manufacturer shall require Department approval prior to installation:

Size Gland	Size Set Screw	Number of Set Screws
4"	1/2"	4
6"	5/8"	6
8"	5/8"	9
10"	5/8"	16
12"	5/8"	16
16"	5/8"	24
20"	5/8"	28
24"	5/8"	32

DESCRIPTION	SIZE	CATALOG NUMBER	MANUFACTURER
Gland Retainer (Series 1400)	18"	UFR1400-D18	Ford
Gland Retainer (Series 1100)	18"	1118	EBBA
Gland Retainer (Series 1400)	12"	UFR1400-D12	Ford
Gland Retainer (Series 1100)	12"	1112	EBBA
Gland Retainer (Series 1400)	8"	UFR1400-D8	Ford
Gland Retainer (Series 1100)	8"	1108	EBBA
Gland Retainer (Series 1400)	6"	UFR1400-D6	Ford
Gland Retainer (Series 1100)	6"	1106	EBBA
Gland Retainer (Series 1400)	4"	UFR1400-D4	Ford
Gland Retainer (Series 1100)	4"	1104	EBBA

12.9.3 Mechanical Joint Retainer Glands for PVC shall be made from DI and shall be designed for a working pressure of at least 200 psi. The set screws shall be extended through the outer most part of the gland. Glands shall be designed to standard mechanical joint fittings (AWWA C111).

DESCRIPTION	SIZE	CATALOG NUMBER	MANUFACTURER
Gland Rtnr.C900 Circle-Lock	18"	UFR1500-C-18	Ford
Gland Retainer (Series 2000 PV)	18"	2018	EBBA
Gland Retainer C900 Circle-Lock	16"	UFR1500-C-15	Ford
Gland Retainer (Series 2000 PV)	16"	2016	EBBA
Gland Retainer C900 Circle-Lock	12"	UFR1500-C-12	Ford
Gland Retainer (Series 2000 PV)	12"	2012	EBBA
Gland Retainer C900 Circle-Lock	8"	UFR1500-C-8	Ford
Gland Retainer (Series 2000 PV)	8"	2008	EBBA
Gland Retainer C900 Circle-Lock	6"	UFR1500-C-6	Ford
Gland Retainer (Series 2000 PV)	6"	2006	EBBA
Gland Retainer C900 Circle-Lock	4"	UFR1500-C-4	Ford
Gland Retainer (Series 2000 PV)	4"	2004	EBBA

12.9.4 Swivel hydrant adapters, anchor couplings, and Tees shall be designed for a working pressure of at least 250 psig and to fit standard mechanical joint fittings (ANSI/AWWA C111 A21). One end of the straight anchor coupling and the branch of the tee shall be provided with a gland that may be rotated 360° on the fitting. Lengths of swivel adapter shall be as specified on plans and conform to standard manufactured lengths.

12.10 **TAPPING SLEEVES (4" TAP & LARGER)**

12.10.1 Tapping Sleeves shall be stainless steel. They shall be designed for a working pressure of at least 200 psig. Steel sleeves shall be stainless steel or coated with high build, Thermo-Set Epoxy. A test plug shall be furnished through the body for hydrostatic pressure testing. The outlets shall conform to ANSI B16.1, Class 125 flanges designed to accept tapping valves described herein. All bolts shall be of corrosion resistant alloy. Sleeves may be designed for a water tight seal by the use of mechanical followers or by the use of a gasket placed in a recess between the sleeve body and the pipe barrel. Only sleeves with mechanical followers or full circle gaskets may be used. If the known working pressure of the pipe to be tapped is greater than 200 psig the DEPARTMENT may require a MUELLER H-615 Series Tapping Sleeve.

DESCRIPTION	SIZE	CATALOG NUMBER	MANUFACTURER
Tapping Sleeves:	Stainless Steel w/Carbon Steel Flange for AC		
Sleeve	16 x 6	Fast-1900-6A 18.60-1900 OD Rough Barrel AC	Ford Meter
Sleeve	16 x 8	Fast-1900-8A 18.60-1900 OD Rough Barrel AC	Ford Meter
Sleeve	16 x 12	Fast-1900-12A 18.60-1900 OD Rough Barrel AC	Ford Meter
Sleeve	12 x 12	FAST-1440-12A	Ford Meter
Sleeve	12 x 8	FAST-1440-8A	Ford Meter
Sleeve	12 x 6	FAST-1440-6A	Ford Meter
Sleeve	8 x 8	FAST-945-8A	Ford Meter
Sleeve	8 x 6	FAST-945-6A	Ford Meter
Sleeve	6 x 6	FAST-750-6A	Ford Meter
Tapping Sleeves:	Stainless Steel w/Carbon Steel Flange for CI/C900		
Sleeve	24 x 4	Fast-2600-4A	Ford Meter
Sleeve	24 x 6	Fast-2600-6A	Ford Meter

Sleeve	24 x 8	Fast-2600-8A	Ford Meter
Sleeve	24 x 12	Fast-2600-12A	Ford Meter
Sleeve	18 x 6	Fast-1992-6A	Ford Meter
Sleeve	18 x 8	Fast-1992-8A	Ford Meter
Sleeve	18 x 12	Fast-1992-12A	Ford Meter
Sleeve	16 x 8	FAST-1780-8A	Ford Meter
Sleeve	16 x 6	FAST-1780-6A	Ford Meter
Sleeve	12 x 12	FAST-1350-12A	Ford Meter
Sleeve	12 x 8	FAST-1350-8A	Ford Meter
Sleeve	12 x 6	FAST-1350-6A	Ford Meter
Sleeve	8 x 8	FAST-945-8A	Ford Meter
Sleeve	8 x 6	FAST-945-6A	Ford Meter
Sleeve	6 x 6	FAST-730-6A	Ford Meter
Sleeve	4 x 4	FAST-620-44A	Ford Meter

Tapping Sleeves: Stainless Steel

Sleeve	4"	SST OR SSTIII	Romac
Sleeve	6"	SST OR SSTIII	Romac
Sleeve	8"	SST OR SSTIII	Romac
Sleeve	10"	SST OR SSTIII	Romac
Sleeve	12"	SST OR SSTIII	Romac
Sleeve	16"	SST OR SSTIII	Romac
Sleeve	18"	SST OR SSTIII	Romac
Sleeve	24"	SST OR SSTIII	Romac

12.11 **SLEEVES OR COUPLINGS**

12.11.1 Sleeves shall be iron with mechanical joint followers. Couplings shall be steel or iron with gasketed ends. They shall be designed for a working pressure of at least 200 psig and sized to properly fit the type and class of pipe specified. All bolts shall be of corrosion resistance alloy. Steel couplings shall be coated internally and externally with high build, high strength, Thermo-Set epoxy coating. The Thermo-Set epoxy coating shall be 8 - 10 mils DFT and free of voids. Or approved equal, prior to construction.

DESCRIPTION	SIZE	CATALOG NUMBER	MANUFACTURER
Transition Couplings:			
Comp Coup AC/CI	16 x 12	442-19201780-400	Smith-Blair
Comp Coup AC/CI	12 x 12	442-14401350-400	Smith-Blair
Comp Coup AC/CI	8 x 12	442-09850945-400	Smith-Blair
Comp Coup AC/CI	6 x 12	442-07650722-400	Smith-Blair

12.12 **TAPPING SADDLES OR SLEEVES (FEMALE IRON PIPE OR AWWA CC OUTLET)**

12.12.1 Tapping Saddles/Sleeves shall be made from iron, bronze, steel or stainless steel and designed for a working pressure of at least 200 psig. Outlets shall be ANSI B16.1, Class 125 flanged tapping outlets, or as specified. Watertight seal shall be accompanied by the use of a gasket placed in a recess between the sleeve body and pipe barrel. The use of these Strap Saddle/Sleeves is restricted to taps where the branch is at least one size smaller than the run. Coatings on steel sleeves/saddles shall be as specified in **Paragraph 12.10** above.

DESCRIPTION	SIZE	CATALOG NUMBER	MANUFACTURER
Service Saddle, C.I., D.I., A.C.			
Saddle	24 x 2 IP Double Strap	FC202-2650xIP7	Ford Meter
Saddle	18 x 2 IP Double Strap	FC202-2050xIP7	Ford Meter
Saddle	16 x 2 IP Double Strap (CI)	FC202-1840xIP7	Ford Meter
Saddle	16 x 2 IP Double Strap (AC)	FC202-1925xIP7	Ford Meter
Saddle	12 x 2 IP Double Strap	FC202-1438xIP7	Ford Meter
Saddle	12 x 2 PVC Only	FC202-1320-IP7 FOR C900	Ford Meter
Saddle	8 x 2 IP Double Strap	FC202-979xIP7	Ford Meter
Saddle	8 x 2 PVC Only	FC202-905-IP7 FOR C900	Ford Meter
Saddle	6 x 2 IP Double Strap	FC202-760xIP7	Ford Meter
Saddle	6 x 2 PVC Only	FC202-690-IP7 FOR C900	Ford Meter
Saddle	4 x 2 IP Double Strap	FC202-526xIP7	Ford Meter
Saddle	24 x 1 CC Double Strap	FC202-2650xCC4	Ford Meter
Saddle	18 x 1 CC Double Strap	FC202-2050xCC4	Ford Meter
Saddle	6 x 1 CC Double Strap (CI)	FC202-1840xCC4	Ford Meter
Saddle	16 x 1 CC Double Strap (AC)	FC202-1925xCC4	Ford Meter
Saddle	12 x 1 CC Double Strap	FC202-1438xCC4	Ford Meter
Saddle	12 x 1 PVC Only	FC202-1320-CC4 FOR C900	Ford Meter
Saddle	8 x 1 CC Double Strap	FC202-979xCC4	Ford Meter
Saddle	8 x 1 PVC Only	FC202-905-CC4 FOR C900	Ford Meter
Saddle	6 x 1 CC Double Strap	FC202-760xCC4	Ford Meter
Saddle	6 x 1 PVC Only	FC202-690-CC4 FOR C900	Ford Meter
Saddle	4 x 1 CC Double Strap	FC202-526xCC4	Ford Meter
Saddle	3 x 1 CC Double Strap	FC202-425xCC4	Ford Meter
Saddle	2 x 1 CC Double Strap	FC202-250xCC4	Ford Meter
Service Saddle with nylon coating:			
Saddle	4 x 2 CC Double Strap	202NS	Romac
Saddle	6 x 2 CC Double Strap	202NS	Romac
Saddle	8 x 2 CC Double Strap	202NS	Romac
Saddle	10 x 2 CC Double Strap	202NS	Romac
Saddle	12 x 2 CC Double Strap	202NS	Romac
Saddle	16 x 2 CC Double Strap	202NS	Romac
Saddle	18 x 2 CC Double Strap	202NS	Romac
Saddle	24 x 2 CC Double Strap	202NS	Romac
Saddle	4 x1 CC Double Strap	202NS	Romac
Saddle	6 x1 CC Double Strap	202NS	Romac
Saddle	8 x1 CC Double Strap	202NS	Romac
Saddle	10 x1 CC Double Strap	202NS	Romac
Saddle	12 x1 CC Double Strap	202NS	Romac
Saddle	16 x1 CC Double Strap	202NS	Romac
Saddle	18 x1 CC Double Strap	202NS	Romac
Saddle	24 x1 CC Double Strap	202NS	Romac

12.13 **SERVICE FITTINGS**

12.13.1 Water service fittings shall be those manufactured by the following companies, listed below, or approved equal. The screws and/or nuts shall be of corrosion resistant alloy and shall be of Hex Head configuration. Any deviation must have approval from the DEPARTMENT prior to installation.

12.13.2 Corporation and curb stops shall conform to AWWA C800 (curb stops shall have 360° rotation of Tee Head) and shall be those manufactured by the company specified, or approved equal, as follows:

DESCRIPTION	SIZE	CATALOG NUMBER	MANUFACTURER
300 Ball Type Corporation Valve	1"	B-25008N	Mueller
		74701BQ 1	A.Y. McDonald
300 Ball Type Corporation Valve	¾"	B-25008N	Mueller
		74701Q ¾	A.Y. McDonald
Valve Ball	1"	FB11-444NL	Ford
		76101 1	A.Y. McDonald
Valve Ball	2"	B-11-777SWM-NL	Ford
		76101W 2	A.Y. McDonald

12.13.3 PE and Copper pipe fittings shall conform to AWWA C800 and shall be those manufactured by the Mueller Company, or approved equal, as follows:

DESCRIPTION	SIZE	CATALOG NUMBER	MANUFACTURERS
Adapter, Female	¾"	C-14-33-NL	Ford
		74754Q ¾	A.Y. McDonald
Adapter, Female	¾" x 1"	C-14-43-NL	Ford
		74754Q ¾ X1	A.Y. McDonald
Adapter, Female	1"	H-15451N	Mueller
		74754Q 1	A.Y. McDonald
Adapter, Female	1" x ¾"	C-14-34-NL	Ford
		74754Q 1 X ¾	A.Y. McDonald
Adapter, Male	¾"	H-15428N	Mueller
		74753Q ¾	A.Y. McDonald
Adapter, Male	1"	H-15428N	Mueller
		74753Q 1	A.Y. McDonald
Adapter, Male	1" x ¾"	H-15428N	Mueller
		74753Q 1 X ¾	A.Y. McDonald
Coupling, Straight	¾" x 1"	C-44-34-NL	Ford
		74758Q ¾ X 1	A.Y. McDonald
Coupling, GALV/PVC	¾" x 1"	C-45-43NL	Ford
		74758Q-55 1 X ¾	A.Y. McDonald
Coupling, GALV/PVC	¾"	C-45-33-NL	Ford
		74758Q-55 ¾	A.Y. McDonald
Coupling, GALV/PVC	1"	C-45-44NL	Ford
		74758Q-55 1	A.Y. McDonald
Coupling, 110 Comp	¾"	H-15403N	Mueller
		74758Q ¾	A.Y. McDonald
Coupling, 110 Comp	1"	H-15403N	Mueller
		74758Q 1	A.Y. McDonald
Ell Brass, 110 Comp	¾"	H-15526N	Mueller
		74761Q ¾	A,Y. McDonald
Ell Brass, 110 Comp	1"	H-15526N	Mueller
		74761Q 1	A.Y. McDonald
Tee Pack Joint	1"	T444-444NL	Ford
		74760Q 1	A.Y. McDonald
Tee, 110 Comp	¾"x¾"x1"	H-15381N	Mueller

		74760Q ¾ X 1	A.Y. McDonald
Tee, 110 Comp	¾"	H-15381N	Mueller
		74760Q ¾	A.Y. McDonald
U-Branch	1"x¾"x7-½"	H-15363N	Mueller
		7084QM	A.Y. McDonald

*Brass Nipples, Tees, Bell Reducers, Ells, Collars, etc. will be 150# SCH-40 Red Brass Domestic Fittings with Iron Pipe Threads.

12.13.4 The following meter setters and meter connection fittings shall conform to AWWA C800 and be those manufactured by the following companies, or approved equal:

DESCRIPTION	SIZE	CATALOG NUMBER	MANUFACTURER
Meter Set w/o Dual Check	5/8"x¾"x7"	B-2404FN	Mueller
		20-207WXLL 33	A.Y. McDonald
Meter Set w/o Dual Check	1" x 10"	B-2404FN	Mueller
		20-410WXDD 44	A.Y. McDonald

*All meter sets will be installed with Mueller End Connection # H-14222N and Mueller End Connection # H-14227N or A.Y. McDonald equal. A Fiber Washer Mueller # H-48234 or A.Y. McDonald equal shall be set in each end connection of the meter set.

12.14 **GATE VALVES**

12.14.1 **GATE VALVES - 4" THROUGH 18" WITH RESILIENT SEAT**

12.14.2 Resilient seat gate valves 4" through 18" shall be designed for a working pressure of 250 psig. Valves shall conform to AWWA C515 (Thin Wall or Lightweight Ductile Spec) with non-rising stem, O-ring stem seals and 2" square operating nut. Valves shall open when the operating nut is turned to the left (counterclockwise). Valve ends shall be as specified. The resilient seat may be bonded or mechanically attached to the gate. All interior metal surfaces shall be coated with a two-part thermosetting epoxy. Gate valves larger than 18" need to be submitted to the DEPARTMENT for approval prior to installation.

12.14.3 Epoxy Coating shall be 8-mils DFT and free of voids.

12.14.4 Tapping valves shall have full size flow way accepting standard size shell cutter.

12.14.5 Valves conforming to these specifications will be accepted from the following manufacturers:

American Flow Control Model # 2500
Clow Valve Company, Model 2638
Mueller Company, Model A2361

12.15 **BUTTERFLY VALVES**

12.15.1 Butterfly valves shall conform to AWWA C504, having the following features and be approved by the DEPARTMENT prior to installation:

12.15.2 Class 150B

12.15.3 Suitable for complete buried service. Exterior of valve shall be epoxy coated.

12.15.4 Disc may be made from any of the materials as specified in AWWA C504. However, discs made from material other than bronze or stainless steel shall be coated with epoxy material in accordance with **Section 12.15.9**. All other interior surfaces which are not stainless steel or bronze shall also be coated with epoxy material.

12.15.5 Valve resilient seats shall be BUNA-N bonded into a self-retaining recess in the body or a natural rubber molded to an 18-8, Type 304 stainless steel retaining ring secured to the disc by self-setting screws. If the set is attached to the disc, the mating surface to the resilient seat shall be 304 or 316 stainless steel.

12.15.6 Stainless steel shafting. "O-Ring" or split-V shaft seals. Bronze, nylon or Teflon bearings and a "Manual Operator" totally enclosed for buried service shall include the following:

12.15.7

(a) 2" x 2" operating nut
(b) Open counter-clockwise
(c) Operators of the traveling nut type shall not have u-joints on the rods.
(d) On operators composed of worm gears; worm gears may be either bronze or DI and the worms shall be composed of hardened steel.
(e) The operator shall satisfy the valve operating torque requirements for Class 150B valves and the operator input requirements of AWWA C504.

12.15.8 Valve ends shall be as specified. If flange ends are specified, they shall conform to Class 125, ANSI B16.1.

12.15.9 Epoxy Coating for Valve Disc. Before application of coating material, all surfaces of the disc shall be thoroughly cleaned to remove dirt, grease, oil and any other substances; all sharp angles, protrusions or irregularities which would interfere with proper coating coverage shall be removed; and the entire surface grit blasted to white metal in accordance with SSPC Specification SP5 resulting in an anchor pattern of at least 1 mil. Thermo-set epoxy material shall be applied to the sand-blasted surfaces before the white metal begins to oxidize (darken in color). The thermoset epoxy shall be approved for exposure to fluids for human consumption by the Federal Food and Drug Administration. The final DFT shall be at least 8 mils DFT and free of voids. The disc shall be post-cured for a sufficient period of time to assure full polymerization. Polymerization shall be checked by a direct impact test at 60-inch-lb. with no cracking or chipping of the coating. The DFT shall be checked using an accurate magnetic DFT gauge. The entire coated surface shall be checked for voids using a wet sponge type holiday detector. Any area where the DFT is found to be less than 8 mils or where voids were detected shall be re-coated and re-checked. Valves shall be packed for shipment in such manner that the disc coating is protected from damage.

12.16 **AIR RELEASE VALVES**

12.16.1 Air Release Valves shall be APCO No. 200-A, or approved equal, or as specified.

12.17 **VALVE BOXES, LIDS AND EXTENSIONS**

12.17.1 Valve boxes shall be Tyler 6850 series or equal with 5 ¼" shafts. Length variable 10 ¼" OD bottom flange, 8" ID Bottom, 7 3/16" OD top, 6 ¾" ID top of 2 section valve box.

12.17.2 Valve box lids shall have a 7 5/16" outside diameter with 6 ½" inside diameter for 5 ¼" valve boxes. The lids shall be marked with "WATER" unless located at the tap for a fire line where a post indicator may not be installed. In this case the lid shall be marked "FIRE" and be painted safety red. The "FIRE" lid shall be locking and require only a wrench to open.

12.17.3 Extension shaft shall be required on any valve that exceeds 4' in depth. Valve stem extensions shall be adequate to transmit full torque required to open valve, and shall be secured to the valve operating nut by set screws not clips. The top of the extension shaft shall be a 2" square AWWA nut. Extensions shall be provided to bring the operating nut to within 4' of grade and have disc attached to hold operating nut in the center of valve box and shall be firmly attached to the valve.

12.18 **METER BOXES, VAULTS AND LIDS**

12.18.1 Water meters 5/8" and 1" shall be installed in 18" Brook's type 22HFX1802KS round plastic meter boxes that are domestically manufactured or as approved by the DEPARTMENT.

12.18.2 Water meters 5/8" and 1" that are installed in non-deliberate and incidental traffic shall be installed with a load bearing meter tile. Water meter installations that fit this criteria will use the DFW Plastics #DFW1800F-18-1ET load rated meter tile. Prior approval for water meters installed in potential traffic loaded areas shall be obtained from the DEPARTMENT during the plan review process.

12.18.3 2" meters are to be installed by City of Bentonville at OWNER/DEVELOPER'S expense. 2" meters shall be installed in 30"x 36" diameter Mid-States MSP 30"X36" meter boxes.

12.18.4 All meter vault plans and installations shall be approved by the DEPARTMENT prior to the start of construction. Meter vaults shall not be subject to flooding and shall be water tight to prevent intrusion of water and dirt. The walls of the vault shall extend above the finished grade a minimum of 3" to prevent intrusion of water or dirt. Vault to be installed by CONTRACTOR at OWNER'S expense. **Detail W12.**

12.19 **FIRE HYDRANTS**

12.19.1 All fire hydrants furnished shall be dry barrel hydrants in conformance with AWWA C502, latest revision, for "Dry Barrel Fire Hydrants", and shall be designed for a 250 psig maximum working pressure. All fire hydrants shall be equipped with a safety stem coupling and flange, which are intended to fail upon vehicle impact without damage to the stem or main valve. All fire hydrants shall conform to AWWA C502, the following specifications, and shall be the Traffic Model Fire Hydrant:

Maximum Working Pressure	250 psig
Size of Valve Opening	Minimum 5"
Diameter of Inlet Connection	6"
Type of Inlet Connection	Mechanical Joint
Number & Size of Hose Connections	2 - 2 1/2", 1 - 4 1/2"
Nozzle Arrangement	All in same place
Nozzle Thread ASA	Standard
Nozzle Cap Chains	Three
Nozzle Cap Washers	Rubber
Barrel	Ductile Iron Pipe
Operating Threads	Oil or Grease Lubricated Seals
Lubrication Chamber	Oil or Grease
Seat Rings	Bronze to Bronze
Direction to Turn to Open	Left (Counter-Clockwise)
Shape & Size of Operating & Nozzle Cap Nut	5-Sided, 1 1/2" from flat to point
Operating Nut	Bronze
Hydrant Shoe	Epoxy Coated
Color above ground - barrel and dome	Industrial Safety Yellow
Color, Nozzle Caps & Top Nut, including shield	Industrial Safety Yellow

12.19.2 Seat must be removable, using a short, lightweight wrench which will fit all depths of bury.

12.19.3 The hydrant shall have a 6" mechanical joint inlet in conformance to the dimensions shown in ANSI/AWWA C110 A21, latest revision. The lead pipe from the valve to the fire hydrant shall be an approved Mechanical Joint Swivel Anchor Coupling 6" x 13" Tyler 084150A CL 153 or approved equal for direct connections, or retainer glands as specified by type throughout these specifications. A fire hydrant anchor tee will be required for new main installation as indicated by the DEPARTMENT.

12.19.4 All fire hydrants shall be equipped with a two-piece barrel having a flange at the required elevation to meet the height requirement (18" to 24" from final grade) designated in **Detail WO4**.

12.19.5 All fire hydrant installations shall have 6" gate valve with tracer wire, valve boxes and valve box pads meeting all provisions specified elsewhere in these specifications. Auxiliary gate valves are necessary for fire hydrant leads longer than 50'.

12.19.6 All concrete used for fire hydrant blocking shall be in conformance with the concrete **Section 12.24** of these specifications.

12.19.7 Fire hydrants conforming to these specifications will be accepted from the following manufacturers:

Mueller Super Centurion 250
Clow Medallion.

12.19.8 If a fire hydrant needs to be raised only 1 extension will be approved and all parts shall be manufactured by the same company as the fire hydrant. Generic extension parts shall not be used.

12.20 POLYETHYLENE TUBING MATERIAL FOR PIPE ENCASEMENT

12.20.1 Polyethylene material for the encasement of cast IP (gray or ductile) shall conform to ANSI A21.5 (AWWA C105).

12.20.2 Tape for field application shall be Polyken #900, or Scotchrap #50, or equal, at least 2" wide.

12.21 LOCATOR WIRE

12.21.1 All water mains and sewer force mains, including DI pipe, PE water services or other appurtenances installed shall have single #10 gauge type TW (single strand) insulated copper locator wire, on top of pipe and fastened securely with tape every 10' and buried with it. This locator wire shall be installed in conjunction with the main at the same depth as the water main or service.

12.21.2 Locator wire shall not be connected in any way to main or any other underground metal (except other tracer wires). Installation of locator wire shall be tested 1 time before the 1st acceptance inspection. Tracer wire shall be tested after curbs are installed and prior to asphalt. **Section 8**

12.21.3 Wire shall be accessible at all valve boxes and meter boxes and shall extend a minimum of 6" above the valve or meter box, at the main or service, connect all locator wires together so that a continuous electrical path is ensured. Tracer wire shall be installed through the outside of the valve box bottom section then inserted through the inside of the top section of the valve box. A minimum of 6" to maximum of 12" of tracer wire is required to be extended beyond the top of the valve box. **Detail W07.**

12.21.4 To connect locator wires, the wires shall be spliced using a split bolt connector (Blackburn 9H or Kearney KS90) or equal, then covered with electrical plastic tape (Type 3M Scotch 33) so that a waterproof joint is made.

12.22 **CONCRETE MATERIAL SPECIFICATIONS**

12.22.1 Concrete shall have a 28-day compressive strength of at least 4,000-psi and shall contain not more than six (6) gallons of water per sack of cement, including the water in the aggregates, and not less than six (6) sacks of cement per cubic yard of concrete. A copy of all tickets from concrete company shall be presented to the DEPARTMENT.

12.22.2 Portland cement conforming to ASTM C150, Type 1, shall be used unless the DEPARTMENT approves the use of other types.

12.22.3 Water used shall be clean and free from injurious amounts of oil, acids, alkalis, salt, organic matter, or other deleterious substances.

12.22.4 Fine aggregate shall consist of clean, sound, properly graded sand conforming to ASTM Standard C33 uniformly graded from 100% passing the 3/8" sieve to not more than 8% passing the Number 100 sieve.

12.22.5 Coarse aggregate shall consist of crushed stone, gravel, or other inert material of similar characteristics, having clean, hard, strong, durable, uncoated particles with not more than 5% by weight of soft fragments, ¼ % by weight of clay lumps, and 1% by weight of material removed by decantation, except that when the material removed by decantation consists essentially of crushed dirt the maximum amount permitted may be increased to 1 ½ % by weight. Aggregate shall conform to ASTM Standard D289. Coarse aggregate may be either of two sizes, 1 ½" and smaller or ¾" and smaller, and shall be graded within the following requirements.

12.23 **PERCENT RETAINED BY WEIGHT**

Maximum size mesh screen (sq. mesh)	0 - 3
Half-Maximum size mesh screen (sq. mesh)	30 - 65
No. 4 Sieve	94 - 100

12.23.1 In no case shall the maximum size aggregate exceed 1/3 of the design thickness of any part of a structure. Coarse aggregate for exposed aggregate surfaces shall be as follows:

Total Retained on 1 1/2" Sieve	- 0 %
Total Retained on 3/4" Sieve	25 - 60%
Total Retained on 3/8" Sieve	70 - 90%
Total Retained on #4 Sieve	95 - 100%

12.24 **CONCRETE PROPORTIONS AND CONSISTENCY**

12.24.1 The proportions of the concrete shall produce a mixture that will work readily, with the placement method most used, into the corners and angles of the forms and around reinforcement. Segregation of materials in the mixture shall not be permitted nor the collection of excess free water on the surface.

12.24.2 The slump of the concrete shall be the minimum that is practicable. When vibrators are used to consolidate the concrete, the slump shall not exceed 4"; otherwise, the slump shall not exceed 6".

12.24.3 The methods of measuring concrete materials shall be such that the proportions can be accurately controlled and easily checked. Measurement of materials for ready-mixed concrete shall conform to Specifications for Ready-Mixed Concrete (ASTM C94).

12.24.4 Ready-mix concrete shall be required and shall conform to ASTM Standard C94 and to applicable portions of these specifications for on-site mixing. The concrete shall be delivered and placed within 1-hour after all materials, including mixing water, shall have been placed in the mixing drum. The CONTRACTOR shall obtain from the supplier of the ready-mixed concrete, the supplier's agreement to inspection by the DEPARTMENT, to the full extent deemed necessary by the DEPARTMENT.

12.25 **CONCRETE TESTING**

12.25.1 As the placement of concrete progresses, the DEPARTMENT may take samples of the concrete for testing. The CONTRACTOR shall provide whatever assistance required by the DEPARTMENT in collecting and preparing samples for testing. Sampling shall be in accordance with ASTM Standard C172.

12.25.2 An independent laboratory in accordance with ASTM Standard C143 shall conduct slump tests.

12.25.3 Compression test specimen shall be prepared and cured in accordance with ASTM Standard C31. Specimens shall be tested in accordance with ASTM Standard C39.

12.25.4 All reinforcing bars shall be "Billet-Steel Concrete Reinforcement Bars" conforming to ASTM Designation A15 or "Rail-Steel Concrete Reinforcement Bars" conforming to ASTM Designation A16. Billet-Steel bars shall be intermediate grade with minimum yield point of 60,000 psi.

12.25.5 All reinforcing bars shall be deformed bars. Deformation shall comply with "Minimum Requirements of the Deformation of Deformed Steel Bars for Concrete Reinforcement - ASTM Designation A305".

12.25.6 When the volume of concrete required at the work site is less than 1/3 cubic yard, mixing may be accomplished by hand tool methods. The concrete shall be mixed in a clean, watertight vessel to the extent necessary to assure that the cement; aggregate and water are thoroughly integrated. The mix shall be at least 1 part Portland cement to 2 parts coarse aggregate, as specified in **Section 12.22.5** and 2 parts sand, as specified in **Section 12.22.4**. Only that amount of water required to provide a stiff, workable mix shall be used. The strength requirements specified in **Section 12.22.1** herein, apply.

SECTION 13 INSTALLATION CRITERIA FOR WATER MAINS AND APPURTENANCES

13.1 **CONNECTIONS TO WATER DISTRIBUTION SYSTEM**

13.1.1 All connections to or any operations of appurtenances to the existing distribution system must be accomplished in the presence of the CITY INSPECTOR or DEPARTMENT representative.

13.1.2 In cases where completing the connection will disrupt service to customers, the CONTRACTOR shall notify the DEPARTMENT at least 5 days in advance of the work. The customers whose service will be disrupted shall be notified by the CONTRACTOR a minimum of 24 hrs prior to disruption of services. The CONTRACTOR shall plan the work so that disruption of service is held to a minimum. The schedule shall be approved by the DEPARTMENT. **Section 9.3.1**

13.1.3 After connections have been completed, the valves shall be tightly closed. All valve operation shall be performed by the CITY INSPECTOR or DEPARTMENT personnel. At no time shall the CONTRACTOR operate valves or fire hydrants within the water distribution system.

13.1.4 A minimum horizontal distance of 10' should be maintained between water lines, and sewer lines, including edges of manholes or other sources of contamination. Water lines and sewer lines shall not be laid in the same trench except on the written approval of the ADH. Water mains necessarily in close proximity to sewers must be placed so that the bottom of the water line will be at least 18" above the top of the sewer line at its highest point. If this distance must unavoidably be reduced, the water line or the sewer line must be encased in watertight pipe with sealed watertight ends extending at least 10' either side of the crossing Where a water line must unavoidably pass beneath the sewer line, at least 18" of separation must be maintained between the outside of the two pipes in addition to the preceding encasement requirement. Exceptions to this must be approved in writing by the ADH.

13.2 **INSTALLATION OF VALVES**

13.2.1 Valves shall be joined in accordance with the methods of jointing pipe as specified elsewhere herein. Valve stems shall be plumb and there shall not be any obstructions which will prohibit the installation of valve boxes directly over the stem. For dead-end lines, concrete anchor collars shall be provided around an adjoining length of pipe for all valves. Mechanical joint retainer glands shall be installed on all valves with mechanical joint ends. Valves shall be installed and anchored on all sides of any Cross or Tee application. All valves shall be firmly supported on well compacted approved bedding and completely wrapped in polyethylene tubing material as specified in **Section 13.11**.

13.2.2 Valve boxes shall be installed over the operating nut of each valve and be of adequate length to reach the finished grade. The box cover shall be flush with the final grade. Tracer wire shall be installed through the outside of the valve box bottom section then inserted through the inside of the top section of the valve box. A minimum of 6" to maximum of 12" of tracer wire is required to be extended beyond the top of the valve box. **Detail W07.**

13.2.3 When the distance between the valve operating nut and the finished surface exceeds 4', a valve stem extension shall be provided. The stem shall be round steel bar stock or steel pipe with a 2" square bar steel operating nut (except 2" valve) attached to the upper end. The stem extension shall be of adequate length to reach from the valve operating nut to a point within 4' of the final grade. A box wrench, 2 1/8" ID square, made from high grade steel 3/16" thick shall be welded * to the lower end of the stem extension which will fit over the valve operating nut. A round center guide made from 3/16" or 1/4" steel plate shall be placed on the valve stem extension approximately 6" from the upper end. The diameter of the guide shall be slightly less than the ID of the valve box. The guide shall be affixed to the stem extension in such a way that it can rotate freely on the stem. A bituminous coating shall be applied to all stem extension pieces.

13.2.3.1 *__NOTE__: Welds on stem extensions (top and bottom nut) shall be 1/8" - 3/16" fillet weld around full circumference, small - large valve stem extension.

13.2.4 Valve stem extensions shall be manufactured by Clow, or equal. Shop drawings shall be submitted to the DEPARTMENT for approval prior to installing the stem extension pieces.

13.3 **INSTALLATION OF TAPPING SLEEVES & TAPPING SADDLES**

13.3.1 The pipe shall be free of dirt and other debris before attaching tapping sleeve or tapping saddle. That part of the pipe barrel, which will be in contact with the gasket of tapping saddles, shall be smooth.

13.3.2 Tapping saddles or sleeves shall be bolted securely to the pipe. The face of the outlet shall be plumb. Mechanical joint glands for tapping sleeves shall be installed in accordance with **Section 12.9.3** herein. The strap bolts for tapping saddles shall be alternately tightened "snug" and then alternately tightened to a torque as required by manufacturer's requirements.

13.3.3 The tapping valve shall be bolted securely to the tapping sleeve or tapping saddle outlet flange. The tapping valve shall be supported by concrete cap blocks to remove weight from the valve and sleeve or saddle.

13.3.4 After installation of the tapping sleeve or saddle and the tapping valve, the assembly shall be hydrostatically tested at 200 psi for 15 minutes by introducing water through the sleeve or saddle test tap.

13.3.5 All tapping sleeves shall have poured-in-place concrete thrust blocking installed after pressure testing prior to tapping. **Detail GWS02**.

13.3.6 Polyethylene material shall be placed in accordance with **Section 13.11** herein.

13.4 FIRE HYDRANT INSTALLATION

13.4.1 All fire hydrants must have placement approval from the DEPARTMENT.

13.4.2 Hydrants shall be thoroughly cleaned before setting, removing all dirt and foreign matter from the barrel and bottom section up to the main valve. The main valve shall be in the "closed" position and the waste outlet shall be free of any obstructions.

13.4.3 Hydrants shall be located a safe distance from driveways, roadways and sidewalks and in a manner to provide complete accessibility. They shall stand plumb with nozzles at proper elevation and the steamer/pumper nozzle pointed perpendicular to traffic when hydrant is adjacent to a street, roadway or parking lot drive or toward the protected building unless otherwise directed by the DEPARTMENT. **Detail W04**.

13.4.4 The large diameter nozzle shall be at right angles to the street or fire lane, with the nozzle cap at a minimum of 3' to maximum of 9' from back of curb or edge of any driving surface (measured from the steamer cap nut) or as directed by the DEPARTMENT. Under no conditions will fire hydrants be allowed in the sidewalk or radius, unless otherwise directed by the DEPARTMENT. Fire hydrants placed in subdivisions need to be installed at the lot line to avoid conflicts with driveways.

13.4.5 The CONTRACTOR shall, if necessary, rotate the hydrant barrel or nozzle section at the flanged joint to obtain the desired nozzle position as specified by the DEPARTMENT.

13.4.6 The fire hydrant shoe shall be supported firmly on the bottom and shall be well braced against unexcavated earth with formed and poured concrete blocking on the backside. If considered necessary by the DEPARTMENT, the fire hydrant shall be tied to the branch pipe with suitable rods or clamps. Rods or clamps are to be furnished by the CONTRACTOR without additional compensation.

13.4.7 All mechanical joint fittings shall be properly protected by polyethylene tubing as described in **Section 13.11**.

13.4.8 A drainage bed shall be provided under and around the base of the hydrant of at least 6 cubic feet in volume and extending at least 6" above the weep hole drain outlet and shall consist of Class #67 gravel. As defined in **Section 10.2.1**. Under no circumstances shall the waste outlet on the hydrant or the drainage bed be connected to sewer or storm drainage.

13.4.9 Backfilling and tamping around hydrant barrels shall be continuous in operation.

13.4.10 After installation, it is required that all fire hydrants shall be covered with a water resistant sack to indicate out-of-service. These may be removed after the CITY INSPECTOR or DEPARTMENT has placed the line in service.

13.5 **CONCRETE PLACEMENT & FINISHING**

13.5.1 All placement of concrete must be in the presence of the DEPARTMENT or representative. The CONTRACTOR is cautioned that he may be required to remove, without compensation, any concrete placed in the absence of the DEPARTMENT or representative.

13.5.2 Equipment for chuting, pumping and pneumatically conveying concrete shall be of such size and design as to ensure a practically continuous flow of concrete at the delivery end without separation of materials. All concrete in reinforced walls and columns shall be poured through tremies unless otherwise permitted by the DEPARTMENT. The free fall of concrete shall be 5' maximum.

13.5.3 Concrete shall be deposited as nearly as practicable in its final position to avoid segregation due to re-handling or flowing. The placing of concrete shall be carried on at such a rate that concrete is at all times plastic and flows readily into the spaces between the bars. Concrete that has been contaminated by foreign material shall not be used, nor shall re-tempered concrete be used.

13.5.4 When placing is once started, it shall be carried on as a continuous operation until placement of the panel or section is complete.

13.5.5 In placing concrete, care shall be taken that the freshly placed mass is so placed and vibrated that there is no tendency for the coarse aggregate to segregate from the mortar, that no rock pockets are left, that the concrete flows readily around the steel and into the extremities of the forms, and the whole freshly-placed mass becomes a plastic jelly-like mass but without free water in appreciable quantity on its surface. No concrete shall be poured without vibration with mechanical or magnetic internal vibrators.

13.5.6 Water shall be removed from place of deposit before concrete is placed unless otherwise permitted by the DEPARTMENT.

13.5.7 Concrete placed directly on the ground shall be placed in the forms on a compacted moist sub-grade and shall be vibrated until mortar covers the entire surface. Vibrating shall be given special attention in order to prevent voids in the concrete.

13.5.8 Concrete after placement and finishing shall be protected from damage while curing. Provisions shall be made for maintaining concrete in moist condition for a period of at least 72 hours after placement.

13.5.9 After removal of forms and finishing, as specified elsewhere herein, backfill shall be placed around the structure and thoroughly compacted.

13.5.10 Forms shall be constructed before placement of any concrete * unless otherwise authorized by the DEPARTMENT.

13.5.10.1 ***NOTE**: Concrete utilized for thrust blocking to be poured against undisturbed earth.

13.5.11 Forms shall conform to shapes, lines, and dimensions of the members as specified on the Plans, or as required to conform to the original shape and dimensions in the case of replacement structures, and shall be sufficiently tight to prevent leakage of mortar. They shall be properly braced or joined

together so as to maintain position and shape. They may be constructed of any material with sufficient strength, which will provide the finished work a satisfactory surface and alignment.

13.5.12 Forms shall be removed in such a manner as to insure the complete safety of the structure. When the structure is supported on shores, the removable floor forms, beams and girder sides, and column and similar vertical forms may be removed after 72 hours, providing the concrete will not be injured. In no case shall supporting forms or shoring be removed until members have acquired sufficient strength to support their weight and imposed loads safely.

13.5.13 Forms shall be coated with a form oil before placement of reinforcing steel or concrete. Excessive coating material shall not be allowed to form or stand in puddles in the forms nor allowed to come in contact with concrete against which fresh concrete or reinforcing bars will be placed.

13.6 CONCRETE REINFORCEMENT

13.6.1 At the time concrete is placed, metal reinforcement shall be free from rust scale or other coatings that will destroy or reduce the bond. All bars shall be shop bent, unless otherwise permitted by the DEPARTMENT. No bars partially embedded in concrete shall be field bent except as shown on Plans or as specifically permitted by the DEPARTMENT. Field bonding of rail steel bars will not be permitted.

13.6.2 Metal reinforcement shall be accurately placed according to the Plans or as specified herein and adequately secured in position by concrete, metal, or other approved chairs, spacers or ties.

13.6.3 No splices of reinforcement shall be made except as shown on the Plans, or as specified, or as authorized by the DEPARTMENT. All welding shall conform to the American Welding Society's Recommended Practices for Welding Reinforcing Steel, Metal Inserts and Connections in Reinforced Concrete Construction (AWS D12.1), unless otherwise authorized by the DEPARTMENT. All laps and splices shall be in accordance with ACI 318, using f'_c = 3,000 psig and f_y = 60,000 psig unless otherwise shown on the Plans.

13.6.4 The reinforcement shall be protected by the thickness of concrete indicated in the Plans. Where not otherwise shown, the thickness of concrete over the reinforcement shall be as follows:

(a) Where concrete is deposited against the ground without the use of forms not less than 3", except wire mesh reinforcement for concrete slabs which may be within 1 ½" of the ground.
(b) Where concrete is to be exposed to the weather or to the ground but placed in forms not less than 2" for bars larger than No. 5 and 1 ½" for No. 5 bars or smaller.
(c) In slabs and walls not exposed to the ground or to the weather - not less than ¾".
(d) In all cases - at least equal to the diameter of the bars.

13.7 CONCRETE COLD-WEATHER REQUIREMENTS

13.7.1 Concrete shall not be placed when the ambient temperature is 40°F and falling, but can be placed if the temperature is 35°F and rising, or when the concrete is likely to be subjected to freezing temperatures before final set has occurred. Concrete footings or slabs shall not be placed over frozen ground. The temperatures of the concrete when placed shall not be less than 45°F. Heated materials shall be free of ice, snow and frozen lumps before entering the mixer. Methods and equipment for the heating of materials shall be subject to the DEPARTMENT'S approval. Suitable means shall be provided for maintaining the concrete at a temperature of at least 45°F for not less than 96 hours after placing.

13.7.2 Any and all concrete damaged by freezing shall be removed to the satisfaction of the DEPARTMENT, and replaced, all at the expense of the CONTRACTOR.

13.8 **CONCRETE HOT-WEATHER REQUIREMENTS**

13.8.1 In hot weather, suitable precautions shall be taken to avoid drying of the concrete prior to finishing operations. Use of windbreaks, sunshades, fog sprays, or other devices shall be provided as directed by the DEPARTMENT.

13.8.2 Concrete deposited in hot weather shall not have a placing temperature that will cause difficulty from loss of slump, flash set, or cold joints. Concrete temperatures shall be less than 90°F unless higher temperatures are permitted by the DEPARTMENT.

13.8.3 The use of additives shall be prohibited unless written approval of its use has been secured, in advance, from the DEPARTMENT.

13.9 **CONCRETE THRUST BLOCKS & ANCHOR COLLARS**

13.9.1 Concrete thrust blocks and anchors shall be provided along the pipeline in accordance with the construction details, plan sheets, or as directed by the DEPARTMENT. The concrete shall have a 28 day compressive strength of 4,000-psi.

13.9.2 Concrete for thrust blocks shall be placed against undisturbed soil. The excavation shall be hand shaped and free of loose material. Forms shall be used to confine the concrete in areas other than that part that is in contact with undisturbed soil in the direction of the thrust.

13.9.3 No concrete shall be placed around any part of a joint or placed so that it interferes with the removal of any joint accessories such as bolts, followers, threads, collars, couplings, etc. Fire hydrant weep hole drain outlets shall not be restricted.

13.9.4 The top of the concrete thrust block or anchor collar shall be struck off with a wood straight edge or float.

13.9.5 Admixtures are not to be used without the approval of the DEPARTMENT.

13.9.6 All placement of concrete must be in the presence of the CITY INSPECTOR or DEPARTMENT representative. The CONTRACTOR is cautioned that he may be required to remove, without compensation, any concrete placed in the absence of the CITY INSPECTOR or DEPARTMENT representative.

13.9.7 Backfill over concrete thrust blocks or anchor collars shall not be placed before the concrete has attained initial set.

13.9.8 No thrust blocks shall be less than 12" thick between the pipeline or appurtenances and undisturbed soil in the direction of thrust.

13.9.9 The excavation shall be free of water before concrete is placed. Steel reinforcement, as specified on the plans, shall be placed in accordance with **Section 13.6** herein.

13.9.10 The pipe or appurtenances shall be cleaned before placing concrete when the concrete is to be in direct contact with the pipe or appurtenance. Polyethylene plastic shall cover all pipes or appurtenances subject to direct contact with concrete.

13.9.11 The area of contact of the thrust blocks and anchor collars shall be sufficient to resist the thrust. This area will vary depending on the safe bearing value of the soil. Suggested safe soil bearing values are as follows:

TYPE OF SOIL	SUGGESTED SAFE BEARING VALUES (TONS\SQ.FT.)
Solid Rock	25
Hard Slate	6
Medium Shale	4
Soft Shale	2
Dry Clay Gravel	4
Soft Clay	1.5
Dry Sand or Loam	2.5
Wet Clay	0.75

13.9.12 The above values are approximate and will vary considerably and are intended to be used only as a reference. The CONTRACTOR is responsible for determining the soil bearing value or taking other action to assure that the bearing area is adequate to restrain the pipe or appurtenances.

13.9.13 Where the soil is unstable or in the case of recent fill areas, the following procedures shall apply either individually or in a combination:

(a) Thrust blocks shall be of adequate size to restrain pipe or appurtenances by mass alone without depending on horizontal bearing of the soil.
(b) The excavation shall extend deep enough to contact firm soil and the block brought up to the pipe or appurtenances and constructed so that the block acts as a beam and will provide restraint required. Such block shall be reinforced with steel reinforcing bars. **Detail GWS04**.
(c) Anchor blocks shall be constructed in a firm soil and tie rods extended to the pipe or appurtenances. **Detail GWS04**.

13.9.14 Thrust blocks for vertical bends shall be adequate to resist the thrust by mass alone when the thrust is upward.

13.9.15 Thrust blocks and anchor collars shall be adequate to restrain the pipeline and appurtenances at the specified test pressure. The following table lists the resultant thrust at certain fittings at a pressure of 100 psi. In order to determine the thrust at the test pressure these values are to be multiplied by a factor equal to the test pressure divided by 100.

13.10 PRESSURE TABLE

Thrust per 100 psi Pressure

Pipe Diameter	Tees Sq. Ft.	90 Bend Sq. Ft.	45 Bend Sq. Ft.	22½ Bend Sq. Ft.	11¼ Bend Sq. Ft.
4"	1.0	1.0	1.0	1.0	1.0
6"	1.5	2.0	1.0	1.0	1.0
8"	2.5	3.5	1.8	1.0	1.0
12"	6.0	8.0	4.0	2.0	1.5
16"	10.0	14.2	7.0	4.0	3.0
18"	21.0	21.0	12.0	6.0	4.0

13.10.1 Concrete thrust blocks or anchor collars that fail to restrain the pipe or appurtenances shall be replaced by the CONTRACTOR at his expense.

13.11 INSTALLATION OF POLYETHYLENE PROTECTION MATERIAL

13.11.1 Polyethylene material ANSI A21.5 (AWWA C105), shall be in tubing form or in the form of flat sheet or rolls, as specified herein, shall be placed around all mechanical joints of pipe and fittings; all valves and fire hydrants with mechanical joint ends and all saddles, sleeves, and couplings, tapping saddles and any other appurtenances with exposed bolts.

13.11.2 Pipe-shaped appurtenances - bends, reducers, offsets and other pipe-shaped appurtenances shall be covered with polyethylene in the same manner as the pipe.

13.11.3 Odd-shaped appurtenances - valves, tees, crosses and other odd-shaped pieces which cannot practically be wrapped in a tube, shall be wrapped with a flat sheet or split length of polyethylene tube. The sheet shall be passed under the appurtenance and brought up around the body. Seams shall be made by bringing the edges together, folding over twice, and taping down. Tape polyethylene securely in place at valve stem and other penetrations.

13.11.4 Where specified in the Plans, DI pipe and appurtenances shall be completely encased in polyethylene tubing material. It is not the intent that the material form an enclosure that is absolutely air or water tight, but to prevent pipe to soil contact.

13.11.5 Polyethylene tubing, when required, shall be applied to water lines by one of the following methods:

(a) Method "A" - Cut polyethylene tube to a length approximately 2' longer than the length of the pipe section. Slip the tube around the pipe centering it to provide a 1' overlap on each adjacent pipe section, and bunching it accordion fashion lengthwise until it clears the pipe ends. Lower the pipe into the trench and make up the pipe joint with the preceding section of pipe. A shallow bell hole must be made at joints to facilitate installation of the polyethylene tube. After assembling the pipe joint, take bunched polyethylene from the preceding length of pipe, slip it over the end of the new length of pipe and secure in place. Then slip the end of the polyethylene from the new pipe section of the end of the first wrap until it overlaps the joint at the end of the preceding length of pipe. Secure the overlap in place. Take up the slack width to make snug, but not tight, fit along the barrel of the pipe, securing the fold at quarter points with tape.

(b) Method "B" - Cut polyethylene tube to a length approximately 1' shorter than the length of the pipe section. Slip the tube around the pipe, centering it to provide 6" of bare pipe at each end. Make polyethylene snug, but not tight; secure ends. Before making up a joint, slip a 3' length of polyethylene tube over the end of the preceding pipe section, bunching it accordion fashion lengthwise. After completing the joint, pull the 3' length of polyethylene over the joint, overlapping the polyethylene previously installed on each adjacent section of pipe by at least 1'; make snug and secure each end.

13.11.6 Openings in Tubing Material - openings for branches, service taps, blow-offs, air valves, and similar appurtenances shall be made by making a x-shaped cut in the polyethylene and temporarily folding the film back. After the appurtenance is installed, tape the slack securely to the appurtenance and repair the cut, as well as any other damaged areas in the polyethylene with tape.

13.11.7 Junctions between Wrapped and Unwrapped Pipe - Where polyethylene wrapped pipe joins a pipe, which is not wrapped, extend the polyethylene tube to cover the unwrapped pipe a distance of at least 2' and secure the end.

13.11.8 The polyethylene material shall be secured around the pipe and appurtenances by at least 3 circular wraps of tape. Tape for field application shall be Polyken #900, or Scotchrap #50, or equal, at least 2" wide.

13.11.9 All tongs, cables or chains that are used for lifting pipe and appurtenances that have been encased in polyethylene material shall be adequately padded to prevent damage to the material.

13.11.10 Repair any rips, punctures, or other damage to the polyethylene with tape or with a short length of polyethylene tube cut open, wrapped around the pipe and secured in place.

13.11.11 Polyethylene material shall be stored on the job site in such a manner that it is not exposed to direct sunlight. Exposure during installation shall not exceed 48 hours.

13.11.12 Backfill material shall be the same as specified for pipe without polyethylene wrapping. Special care shall be taken to prevent damage to the polyethylene wrapping when placing backfill. Backfill material shall be free from cinders, refuse, boulders, rocks, stones and/or other material that could damage polyethylene.

13.12 **METER CONNECTIONS**

13.12.1 All meter sets shall be provided with approved washers at both ground union connections.

13.12.2 All fittings shall be sealed using approved pipe sealant or Teflon tape.

13.13 **FILLING WATER LINES**

13.13.1 After the water lines and appurtenances have been installed, all concrete thrust blocking has cured adequately and upon approval of the CITY INSPECTOR or DEPARTMENT, the water lines shall be filled with water.

13.13.2 In order to prevent circulation of water through the new water lines back into the distribution system, only one valve shall be opened to allow water to flow into the new water lines. This valve will be tightly closed after the filling operation has been completed.

13.13.3 The valve operated to fill the water lines shall be operated slowly and shall not be fully opened. All water valve and fire hydrant operation shall be performed by the CITY INSPECTOR or DEPARTMENT representative.

13.13.4 All air shall be expelled from the pipeline by opening fire hydrants and/or other openings installed at the pipeline crests by the CONTRACTOR. The location and number of such openings shall be as shown on the Plans or as directed by the DEPARTMENT.

13.14 **HYDROSTATIC PRESSURE AND LEAKAGE TESTS**

13.14.1 All water lines and appurtenances shall be tested by a hydrostatic pressure test conducted at a minimum of 150 psig, or static pressure plus 50% whichever is greater after all trenching or boring has been completed in area of water main or water services, this includes the installation of electric conduit.

13.14.2 After the water lines or isolated sections of the pipeline have been filled with water, the pressure shall be increased to the test pressure by means of a pump. The leakage test shall be in accordance with the AWWA Manual of Water Supply Practice. The manual shall be chosen based on pipe material being tested. Concrete Pressure Pipe (M9), Steel Pipe (M11), PVC Pipe (M23), Ductile-Iron Pipe (M41), and PE Pipe (M55).

13.14.3 The CONTRACTOR shall furnish a pump with meter on discharge side of pump and a 4" gauge in 2 lb. increments, and all labor for conducting the tests.

13.14.4 The duration of the hydrostatic leakage test shall be 2 hours or as specified by the CITY INSPECTOR or DEPARTMENT representative.

13.14.5 The source of water for the pump suction shall be potable water from the DEPARTMENT'S distribution system. The vessel used must be approved by the CITY INSPECTOR or DEPARTMENT representative.

13.14.6 All interior valves including valves on fire hydrants and other appurtenances shall be open during all tests.

13.14.7 The maximum leakage per hour for DI and PVC shall be as calculated from the following formula (All rubber gasket or 0-ring joints):

$$L = \frac{SD\sqrt{(P)}}{148{,}000}$$

L = allowable leakage, (gallons per hour)
S = Length of pipe tested, in feet
D = nominal diameter of pipe, (inches)
P = average test pressure during leakage test, (psig)

13.14.8 After the specified test pressure has been applied the entire pipeline shall be checked in the presence of the CITY INSPECTOR or DEPARTMENT representative. After the CONTRACTOR has taken the necessary action to repair or replace any part of the pipeline or appurtenances where leaks were apparent or if no leaks were apparent, the water lines shall be subjected to a leakage test at the pressure specified with a meter inserted in the test pump discharge line.

13.14.9 If any test of pipe laid discloses leakage greater than the allowable leakage as calculated from above formula or table, the CONTRACTOR shall, at his expense, locate the leak or leaks and perform whatever work and/or replace whatever material that is required in order to remedy the defect and stop the leak. After corrective work has been completed, the section of line replaced or repaired shall be re-tested. All corrective work must be approved by the DEPARTMENT.

13.14.10 Prior to the pressure test, the ENGINEER shall present an allowable leakage report to the CITY INSPECTOR.

13.15 DISINFECTING WATER LINES AND APPURTENANCES

13.15.1 Disinfection of water lines shall be performed in accordance with AWWA C651.

13.15.2 The CONTRACTOR shall construct blow-offs and sample points, as shown on the Plans or as directed by the CITY INSPECTOR or DEPARTMENT. Temporary blow-offs shall be utilized as sample points. Openings for sample points shall be 1" with polyethylene riser pipe that extends well above the surface, **Detail W01**. The lines shall not be considered acceptable until 2 consecutive samples are negative of bacteria. Water samples are only taken on Monday's, Tuesday's, Wednesday's and Thursday's.

13.15.3 The continuous feed method is the only acceptable method for disinfection and sterilization. The DEPARTMENT shall approve any method other than the continuous feed method. The continuous

feed method using liquid chlorine or granulated minimum of 60% available chlorine calcium hypochlorite. Liquid chlorine shall be used only when the CONTRACTOR has suitable equipment available and employees who are familiar with the physiological, chemical and physical properties and who are properly trained and equipped to handle any emergency that may arise. If, in the opinion of the CITY INSPECTOR or DEPARTMENT, the equipment is inadequate or the personnel are not qualified, this method shall not be used.

13.15.4 When the continuous feed method is to be used, the pipelines and appurtenances shall be thoroughly flushed prior to disinfecting. The flushing plan shall be approved by the CITY INSPECTOR or DEPARTMENT. The DEPARTMENT may halt or reduce flushing when required.

13.15.5 The operation of valves or fire hydrants for this method shall be performed by the CITY INSPECTOR or DEPARTMENT Representative.

13.15.6 The CONTRACTOR is reminded that chlorine is a powerful oxidant and reacts readily with foreign substances. All chlorine compounds shall be handled and stored in accordance with manufacturer's recommendations. Breathing of chlorine gas can be fatal. Hypochlorite solutions should not come into contact with skin or clothing. Containers used for mixing hypochlorite solution shall be clean and dry.

13.15.7 When the continuous flow method is used, the final concentration of chlorine inside the main shall be 50 parts per million and remain at this strength for a period not less than 24 hours. Calcium hypochlorite shall contain minimum 60% available chlorine by weight in granular form.

13.15.8 During application of any chlorine solution, The CITY INSPECTOR or DEPARTMENT Representative shall be present to operate valves to ensure that the solution does not flow back into the distribution system.

13.15.9 The procedure for disinfecting by the continuous flow method shall be as follows:

(a) The flow through the pipeline and the solution flow shall be regulated so that the required concentration of chlorine is attained. The flow through the main shall be measured by using a pitot gauge or meter.
(b) The introduction of the solution shall be continuous until the desired concentration is attained throughout the pipeline system. The concentration shall be checked by the Drop Dilution Method.
(c) After the required concentration has been attained all internal valves shall be operated in order to assure that the solution comes in contact with all appurtenances.
(d) The solution shall remain in the pipeline system for 24 hours after which the pipelines shall be thoroughly flushed. The chlorine concentration shall be checked before flushing. If the concentration is less than 25 parts per million, the disinfecting procedure shall be repeated if directed by the CITY INSPECTOR or DEPARTMENT representative. Extreme caution shall be taken to ensure solution does not run into a stream or pond.

13.15.10 If any of the samples collected are positive of bacteria, the disinfecting procedures shall be repeated as directed by the DEPARTMENT until negative samples are collected and approved by the ADH.

13.15.11 The cost of continuous sampling and flushing of water may be charged to the CONTRACTOR.

13.16 **CLEANING LARGE PIPELINES**

13.16.1 Before disinfection, hydrostatic pressure and leakage testing - **Sections 13.14 & 13.15**, water lines 16" in diameter and larger or any other water line required by the DEPARTMENT shall be cleaned by forcing a resilient high density Polyurethane foam "cleaning pig" through each segment of the

pipeline by water pressure to remove any dirt or other foreign matter from the pipeline. The "pig" shall be Style III, Type C (blue, plain criss-cross), manufactured by Knapp, Inc., Houston, Texas, or equal, in good condition and shall be at least 2% larger in diameter than the ID of the pipeline being cleaned.

13.16.2 The "pig" shall be inserted in the first length of pipe installed in each segment of pipeline. After installation of the pipeline segment to be cleaned, the pipeline shall be filled at a point downstream of the "pig". The "pig" shall be forced through the pipeline by applying water pressure to the rear of the "pig" and opening blow-off valves or fire hydrants downstream of the "pig". Valve at blow-off points shall be closed immediately prior to the "pig" passing.

13.16.3 Based on past experience, the "pig" will negotiate bends and tees in the pipeline and may also be forced through the pipeline backward after a pass forward. Openings in the pipeline, as shown on the Plans for removing the "pig", are based on this assumption. If the CONTRACTOR is unable to clean the pipeline, utilizing the openings provided, additional openings shall be provided by the CONTRACTOR, upon approval of the DEPARTMENT, at the expense of the CONTRACTOR.

13.16.4 If the need for more than one pass of the "pig" through the pipeline is indicated, the CONTRACTOR shall make additional passes as directed by the DEPARTMENT.

13.16.5 Drainage at blow-off points shall be provided so as not to create a nuisance and to avoid property damage.

SECTION 14 WASTEWATER COLLECTION SYSTEM GENERAL INFORMATION

14.1 No gravity sewer main conveying raw sewage shall be less than 8" in diameter unless prior approval is obtained from the DEPARTMENT and the ADH.

14.1.1 There shall be a 5' minimum separation between the outside edge of a public sewer main to the outside edge of all other utilities within the utility easement. There shall be a 3' minimum separation from the outside edge of a manhole barrel to the outside edge of any other utility within the utility easement. Any deviation must have approval from the DEPARTMENT prior to installation. Sewer STEP systems are prohibited in the City of Bentonville. There shall be no case that a property has an active septic tank directly or indirectly tied to the public sewer system.

14.1.2 Where the difference in invert elevation between two pipes entering a manhole is 2' or more, and no alternative exists, a drop connection shall be utilized as shown on the standard detail sheets. Internal drop connections may be utilized if top to invert elevation is greater than 15' with the DEPARTMENTS approval. For new manholes and pipes 8" and larger, drop manholes shall have a larger inside dimension than specified as directed by the DEPARTMENT. External drop connections are not permitted for manholes greater than 13' deep.

14.1.3 The minimum earth cover for sanitary sewer mains shall not be less than 36" from final grade unless there is prior approval from the DEPARTMENT.

14.1.4 In any case of signs, fencing or structures installed near a public sewer main, at least 5' of separation must be maintained. In any case of a permanent building built near a public sewer main at least a 10' separation must be maintained. Any deviation in separation minimums must get approval from the DEPARTMENT prior to installation or construction.

14.1.5 Sewer pipe material shall be of the types listed in these specifications. Materials not specifically authorized in these specifications are forbidden for use in the system unless otherwise approved by the DEPARTMENT in writing.

14.1.6 For maintenance purposes, an access road shall be provided for all off-site sanitary sewer manholes. For the purpose of this section, off-site manhole refers to manholes which are not located within 25' of a public street.

14.1.7 Access roads shall be a minimum of 12' wide and located within a minimum 20' wide utility and/or access easement. Street curb sections shall be modified to allow access for large vehicles including adequate turning radii. Turning radii shall also be provided to accommodate Department vehicles at any change of direction. Turn-arounds shall be provided at dead-end access roads which change direction and at any point where the slope of the road increases to 10% or steeper. Access roads with slopes up to 10% shall be minimum 6" of ARDOT Class 7 granular base compacted to 95% of standard proctor maximum dry density. Access roads steeper than 10% shall include a minimum 2" thick asphalt surface course in addition to the 6" of granular base mentioned above. Asphalt surface course shall meet the requirements of the current City of Bentonville's Minimum Standards for Streets. A rigid pavement section with equivalent structural number will be allowed on sections steeper than 10%. Erosion and storm water controls shall be installed to prevent erosion and other road impairment.

14.1.8 The utility main that is stubbed out shall terminate at a manhole for a sewer main or a fire hydrant assembly with a restrained gate valve connected to the downstream side of the tee for a water main. The purpose for the stub-out is to allow for connection to the utility without disturbing the existing development.

14.2 ENCASEMENT PIPE

14.2.1 Smooth Wall Steel Encasement Pipe - Pipe shall conform to ASTM A-139, ASTM A-21.11. The metal thickness shall be as shown in the Proposal or Plans.

14.2.2 Casing spacer systems shall be manufactured in two pieces, made from heavy gauge T-304 stainless steel with Polymer Plastic Runners (Teflon). Spacers shall be a Cascade Casing Spacer manufactured by Cascade Waterworks Manufacturing Company or equal conforming to ASTM ratings, approved by AWWA and the DEPARTMENT. Encasement spacers shall be sized to eliminate the potential for the sewer main inside the encasement pipe to float. Casing and utility pipes shall be sealed with synthetic rubber end seals. **Detail GWS01**.

14.2.3 Location of main extensions to service parcels of property shall be planned so as to minimize the length of building sewer, which must be maintained by the property owner. If sewer stub-outs are provided for each lot in a new development, said stub-out shall be placed on the lowest elevation corner of property.

14.2.4 In no case shall a residential building be allowed to connect to the same sewer service or building sewer of another private residential building. Each building structure shall have a separate sewer line service from the point of the utility source and in no case be interconnected with the plumbing system of another privately owned property.

14.2.5 All gravity sewer main extensions without regard to length shall terminate in a standard manhole. Manholes are to be spaced no greater than 400' and shall occur at all changes in direction or grade.

14.2.6 Sewer easements will be a minimum 20' in width. Easements shall be dedicated as utility easements unless required to dedicate for the exclusive use of the sewer lines. Sewer lines must be located within the center of the easement or as directed by the DEPARTMENT. Recorded utility easement shall be provided to the DEPARTMENT. There shall be a 5' minimum separation between the outside edge of a public sewer main to the outside edge of all other utilities within the utility easement. Any deviation must have approval from the DEPARTMENT prior to installation. Recorded utility easement shall be provided to the DEPARTMENT.

14.2.7 Sewer services shall terminate at the building setback or easement. Services shall be located from lot lines as directed by the DEPARTMENT. Placement of service stub-outs should be located on lowest elevation lot corner. Termination of all stub-outs shall be clearly marked 36" above ground with a single 6' T-Post (painted green) driven in the ground at a minimum of 36". GPS coordinates for the end of each service shall be provided in a chart on the final as-builts plans. **Section 5**.

14.2.8 All efforts shall be made to design sewer systems that are accessible for future maintenance. Manholes should be located on or near streets in order to minimize difficulty of routine maintenance and all efforts should be made to eliminate manholes in ditches or drainage areas. Prior approval to locate manholes in surface runoff areas, such as drainage ditches, shall be approved by the DEPARTMENT prior to construction. All manholes located in drainage areas shall be equipped with watertight manhole rings and covers.

14.2.9 Access to sewer easements shall be reviewed on a case by case basis during plan review.

14.2.10 Sewer service lines from buildings to sewer mains shall be placed so as not to cross driveways, walks and proposed permanent objects over them.

14.2.11 The DEPARTMENT shall perform all 4" taps on existing main lines. All 4" services tying into existing sewer infrastructure shall tie into sewer main lines and not manholes. All services larger than 4" that are tying into the existing sewer infrastructure must tie into a manhole All expenses for tying sewer services into existing manholes are at CONTRACTORS cost. Any tie to an existing manhole requires water stop and no shrink grout to repair intrusion. All manhole intrusions are required to undergo vacuum testing at CONTRACTOR'S cost. A 24 hour notice is required for sewer taps.

14.3 **Minimum Slope for Sewer Line Installation Table**

Nominal Sewer Main Size	Minimum Slope in Feet Per 100 Feet (m/100 m)
8 inch (200 mm)	0.40
10 inch (250 mm)	0.28
12 inch (300 mm)	0.22
14 inch (350 mm)	0.17
15 inch (375 mm)	0.15
16 inch (400 mm)	0.14
18 inch (450 mm)	0.12
21 inch (525 mm)	0.10
24 inch (600 mm)	0.08
27 inch (675 mm)	0.067
30 inch (750 mm)	0.058
33 inch (825 mm)	0.052
36 inch (900 mm)	0.046
39 inch (975 mm)	0.041
42 inch (1050 mm)	0.037

SECTION 15 WASTEWATER COLLECTION SYSTEM MATERIALS

15.1 **ALL MATERIALS TO BE DOMESTICALLY MADE.**

15.1.1 All gravity or force sanitary sewer pipe shall be PVC. If it is deemed necessary to install DI pipe, the use of DI pipe shall be subject to approval by the DEPARTMENT prior to installation. The

minimum acceptable size of all gravity sewer mains is 8" diameter, unless prior approval is obtained from the DEPARTMENT and the ADH. All pipe installed shall be of the type, size, class and thickness as indicated in these specifications and on the design plans. The design strength of pipe used shall be based on standard Engineering design principles and manufacturer or trade association recommendations. Only pipe materials listed in this section shall be used for sanitary sewer mains and service lines unless specifically authorized by the DEPARTMENT.

15.2 **POLYVINYL CHLORIDE (PVC)**

15.2.1 Pipe shall meet the requirement of SDR-26 Heavy Wall Sewer Pipe and comply with ASTM-3034 and Cell Classification 12454-B. Pipe joints shall be integrally molded bell ends per ASTM D-3034 Type PSM with factory supplied elastomeric gaskets and lubricant. Pipe shall be continually marked with the following:

(a) Nominal OD
(b) Dimension Ratio (SDR-26)
(c) Notation "Heavy Wall Sewer Pipe"
(d) Cell Classification: 12454-B
(e) SDR Rating ASTM-D3034
(f) Manufacturer's name or trademark and production code
(g) Seal (mark) of the testing agency that verified the suitability of the pipe. (such as: "PSP")

15.2.2 The DEPARTMENT prohibits all A2000 type or any "profile pipe" use.

15.2.3 Pipe joints shall be integrally molded bell ends per ASTM D 3034, Table 2, with factory supplied elastomeric gaskets and lubricant.

15.3 **DUCTILE IRON PIPE**

15.3.1 Installation of DI pipe shall be installed under the direction of the DEPARTMENT. DI pipe that meets ASTM 4746, extra heavy type, inside nominal diameter as specified on plans, bell and spigot end shall be used. Jointing devices ASNI A21.11, rubber gasket joint devices.

15.3.2 All DI pipe and fittings for sewer service shall have an interior epoxy lining. The lining system shall be either Protecto 401 Ceramic Epoxy as manufactured by Vulcan Painters, Inc or Perma-Shield Series 431 manufactured by Tnemec. The lining applicator shall have a successful history of applying linings to the interior of DI pipe.

15.4 **PIPE ACCESSORIES**

15.4.1 If any pipe accessories are necessary the material being used shall be submitted to the DEPARTMENT for approval **prior to** installation. If approval has not been obtained **in writing**, the contractor is at risk of removing any accessory at the DEPARTMENTS discretion.

15.5 **FITTINGS**

15.5.1 All fittings shall be made of the same material as the sewer main whether it is Ductile Iron or Heavy Wall SDR-26. Fittings shall have a push-on gasket seal that will allow for a passing air test. All fittings shall be submitted to the DEPARTMENT for approval **prior to** installation.

15.6 CLEANOUTS

15.6.1 Cleanouts are strictly prohibited as a point of entry or maintenance for use in the municipal sewer system. Clean-outs shall be installed on private plumbing only. Entry into the sewer main shall be facilitated by the use of manholes only or as directed by the DEPARTMENT.

15.7 FORCE MAINS

15.7.1 All force mains will have a 3' minimum cover of bedding material installed according to **Detail LS09**. The installation of the force main will include a 10 gauge solid strand copper tracer wire with locator ports. The pipe material that is to be used will need to withstand a 150 pound hydrostatic test preferably C-900 DR-18. Warning tape will need to be installed approximately 6" above the pipe. The warning tape will have "Force Main" written on in order to identify the pipe. Pipe size shall be a minimum of 4".

15.7.2 Where force mains enter manholes the manholes shall be epoxy lined to a thickness of 125 mils after the installation of a ½" of cementitious lining has been applied. Manholes within 1000' downstream shall also be epoxy lined to prevent degradation of the manhole. In addition, any manhole upstream of the lift station wet well within 500' shall be epoxy lined.

15.8 TRACER WIRE PORTS FOR FORCE MAINS

15.8.1 Tracer wire ports will be located no further apart than 500' and placed at every change in direction. The ports are to be laid out so that they are located by a manhole whenever possible for ease of locating in the event that they get buried. The tracer wire ports will consist of a 4" pipe resting on the bedding material and extending to the final grade elevation. The tracer wire port will include a cast iron lid and an 18" pre-cast or cast in place concrete pad. The tracer wire will be brought up through the 4" pipe and extend a minimum of 12" out of the top of the pipe. The tracer wire will be installed in a manner that will allow the force main to be located in both directions from the tracer wire port.

15.8.2 Valve boxes shall be Tyler 6850 series or equal with 5 ¼" shafts. screw type, 5 ¼" drop lid with "SEWER" on lid. All valve box material shall be domestically made.

SECTION 16 SEWER MANHOLE INFORMATION AND MATERIALS

16.1 This section covers materials to be used in the construction of standard manholes, drop manholes and watertight manholes.

16.2 CONCRETE CURING AND COMPOUNDS

16.2.1 Concrete used in the construction of manholes shall conform to the requirements in **Section 12.22.** Curing compounds or covers must be approved by the DEPARTMENT. It is the responsibility of the CONTRACTOR to protect the concrete to prevent cracking during the curing process and to protect the manhole during freezing temperatures. The CITY INSPECTOR shall, at their discretion, prohibit pouring concrete during periods of extreme cold or inclement weather.

16.3 CAST-IN-PLACE-MANHOLES

16.3.1 Cast-in-place manholes shall be constructed of 4,000 psi concrete with the concrete base a minimum thickness of 8" below the invert and shall be poured on undisturbed earth. The base shall extend a minimum of 24" in all directions from the exterior of the manhole barrel. **Detail SS01**.

16.3.2 Concrete shall be deposited evenly distributed in a continuous pour in maximum layers of 18", with each layer vibrated to bond it to the preceding layer.

16.4 DROP TYPE MANHOLES

16.4.1 Drop type manholes installations shall be approved during plan review. **Detail SS02** for interior drop type manholes and **Detail SS03** for exterior drop type manholes.

16.4.2 Internal drops may be constructed in existing manholes if top to invert elevation is 15' or greater. All requests for internal drop construction shall be approved by the DEPARTMENT. Point of intrusion shall be re-sealed with an approved water stop and grouted in place, the top section fitting shall be an all Hub SDR 26 double sanitary tee with direction of flow pointing downward. Vertical piping will be attached to concrete with 1 ¾" stainless steel bands by 5/8" X 3" stainless steel bolts with expansion anchors. Piping will terminate with a 90° long sweep bend resting on original invert base, fitting will be grouted in place on both sides to support assembly while forming new invert trough. Minimum pipe size for internal drop shall be 6".

16.5 SANITARY SEWER MANHOLE ABANDONMENT

The DEPARTMENT requires the entire removal of the manhole if 5' deep or less. Upon removal of the manhole, all lines going into the manhole are to be cut and filled with 4,000 psi concrete until pipe is full, to not allow any infiltration.

Any manhole that is deeper than 5' is to be abandoned according to **Detail SS07**.

16.6 MANHOLE RINGS AND LIDS

16.6.1 All castings for manhole rings and lids must be of the best quality gray cast iron, free from cracks, holes, scale, shrinkage, distortion and other defects which might make them unfit for their intended use. They shall have a workmanlike finish, shall be non-rocking, shall have all bearing surfaces machined smooth and shall be of such quality that a blow from a hammer will produce an indentation on a rectangular edge of casting without flaking the metal. Manhole rings and lids shall have a minimum access diameter of 24". The manhole lids shall be of solid construction without any openings other than 2 concealed pick holes which shall be located on direct opposite sides of the manhole lid. The concealed pick holes shall be of such design as not to allow infiltration into the manhole. Manhole lids shall have "SANITARY SEWER" or "CITY OF BENTONVILLE SANITARY SEWER" cast on the lid. Standard manhole rings and lids shall be East Jordan Iron Works 1348-1 266# total weight or approved equal determined by Bentonville Water Utilities, either model shall have a combined weight of ring and lid equaling 250 pounds or greater. All rings and lids shall be domestically made. **Detail SS04**.

16.7 PRIVATE MANHOLE

16.7.1 The manholes along private sewer lines shall require the private manhole lids. Model #00134853. **Detail SS08**

16.8 WATERTIGHT MANHOLE RINGS AND LIDS

16.8.1 Watertight manhole rings and lids where required on the plans by DEPARTMENT, shall be East Jordan Iron Works, (260# or greater), or approved equal determined by Bentonville Water Utilities and be domestically made. **Detail SS05**.

16.9 **MANHOLE STEPS**

16.9.1 Manhole steps are strictly prohibited within the Bentonville Wastewater Collection System.

16.10 **WATER STOPS**

16.10.1 Water stops for pipe connections to manholes shall be Fernco Concrete Manhole Adapters, or approved equal determined by Bentonville Water Utilities, furnished in the appropriate size for the type and class pipe used. Water stops are required for all sewer pipes entering manhole walls or bases.

16.11 **MANHOLE CONFIGURATIONS AND CONSTRUCTION**

16.11.1 Manholes shall be of such construction so that the finished manhole will have an ID of 4' 0" plus or minus ½". Concrete used to pour the manhole shall be 4,000 psi with a slump of approximately 3". Wall thickness shall be a minimum of 6". **Detail SS01**

16.11.2 Before the forms are set in place, any water that may have accumulated in the excavated area shall be pumped out.

16.11.3 All manholes shall be a monolithic pour. Pouring the base and walls with one continuous pour. The manhole shall not be backfilled less than 24 hours after the forms have been removed. Extra care shall be taken to compact all backfill to the top of the highest pipe entering the manhole. After these pipes have been put in place, the barrel shall be repaired using a grout mixture. If honeycombing of the barrel is found to be present after removal of the forms, they shall be repaired as directed by the ENGINEER, DEPARTMENT or CITY INSPECTOR. If it is necessary due to the depth of the sewer main to pour the manhole in two sections, the joint shall have #4 rebar on 12" centers with a 3" X 3" construction joint. Manhole is to be inspected by CITY INSPECTORS before additional pour is done.

16.12 **MANHOLE SHAPE AND INSIDE DIMENSIONS**

16.12.1 Manhole shapes shall be cylindrical and 48" diameter for sewer mains 12" and less and 60" diameter for sewer mains larger than 12".

16.13 **MANHOLE DESIGN DEPTH, HEIGHT AND PLACEMENT**

16.13.1 Manhole depth shall be as indicated on plans. The DEPARTMENT requires accessibility to all manholes, the responsible ENGINEER shall design the sanitary sewer system in a manner so as to eliminate backyard placements between buildings, behind permanent structures, or other locations not accessible for normal street side maintenance.

16.13.2 Street side manhole rim elevations shall be 4" above the proposed final grade and offsite or non-street side manhole top rim elevations shall be 12" above proposed final grade. Manhole risers used in vertical adjustment must have ram-nek installed with the new riser. It must be heated in a manner that allows workability so it can be pressed into the receiving ring or inset of additional risers used to achieve proper rim elevation. Any risers added must be seated fully, "squeeze out" is proof of a water tight joint and a proper installation. All manhole rim elevations shall be shown as such on the sewer profile sheet and noted in the general construction notes. The DEPARTMENT, during final inspection, will address finished manhole elevations and may require additional height elevations. All manholes constructed in ravines, drainage or runoff areas will require the installation of a watertight ring and lid or rim shall be 12" above 100 year flood.

16.13.3 After sewer construction is complete, the vertical adjustment shall be no more than 24" plus the lid. Adjustments greater than 24" require the reconstruction of the manhole cone. A maximum of (2) risers may be utilized to achieve the 24" of adjustment.

16.14 MAIN AND SERVICE PIPES

16.14.1 All main and service pipes shall be neatly cut flush with inside of manhole or inlet where they enter structure walls, and correct irregularities and rough edges with non-shrinking grout.

16.15 CONNECTIONS TO MANHOLES

16.15.1 To ensure that pipe will not sag or break immediately adjacent to the manhole, care shall be taken that excavation for the manhole bottom is limited to the area to be filled with concrete. The CONTRACTOR shall support pipe entering the manhole all the way to solid bedding by placing approved backfill under the pipe and up to the mid spring-line with Class B concrete.

16.16 INVERTS

16.16.1 The invert of the manhole shall be hand-placed and shaped using the same 4,000-psi concrete mixture used to pour the base and walls of the manhole. The invert shall be shaped and smoothed so that the manhole will be self-cleaning and free of areas where solids may be deposited as sewage flows through the manhole and from service lines that enter the manhole base. Inverts shall be shaped, formed and brushed smooth from the concrete poured for the base prior to the initial set of the base. In all cases the diameter of each pipe entering the manhole barrel shall be cut smooth with the inside edge of the manhole barrel and the invert shaped throughout from all inlet pipes to the outside pipe. Shape inverts for smooth flow across structure floor as shown on drawings.

SECTION 17 SEWER SYSTEM GENERAL INSTALLATION INFORMATION

17.1 ALL MATERIALS SHALL BE DOMESTICALLY MADE

17.2 FIELD QUALITY CONTROL

17.2.1 Compaction testing will be performed in accordance with ANSI/ASTM D698, ASTM D2922, ASTM D3017 or ASTM D1557.

17.2.2 Test sanitary sewer pipe system installed below grade and outside building in accordance with the following procedures:

(a) The CONTRACTOR shall perform the testing of manhole construction, pipe materials and/or other materials incorporated into the construction of the sanitary sewer system to determine leakage and water tightness. Testing to be supervised by design ENGINEER and inspected by the CITY INSPECTOR.

17.3 AIR TESTING OF GRAVITY SEWER LINES

17.3.1 All gravity sewer lines shall be tested in accordance with the following procedures after all trenching and boring in area of sewer mains and sewer services:

(a) Plug all pipe outlets with suitable test plugs. Brace each plug securely.
(b) Pipe air supply to the pipeline to be tested in such a manner that the air supply may be shut off, pressure observed and air pressure released from the pipe without workmen entering the manhole.

(c) Add air slowly to the portion of pipe under test until the internal pressure of the line is raised to approximately 4 psig but less than 5 psig.
(d) Shut the air supply off and allow at least 2 minutes for the air pressure to stabilize.
(e) When the pressure has been bled down to 3 1/2 psig and stabilized, start the test.
(f) If the pipe section does not decrease from 3.5 psi to 2.5 psi in less time than is allotted the section passes the test.

17.4 GRAVITY SEWER AIR TESTING TIME REQUIREMENTS

Table 1 - Minimum Specified Time Required for a 1.0 psig Pressure Drop for Size and Length of Pipe Indicated for $Q = 0.0015$

Pipe Diameter, In.	Minimum time, min:s	Length for Minimum Time, ft	Time for Longer Length, s	Specification Time for length (L) Show, min:s							
				100 ft	150 ft	200 ft	250 ft	300 ft	350 ft	400 ft	450 ft
4	3:46	597	0.380 L	3:46	3:46	3:46	3:46	3:46	3:46	3:46	3:46
6	5:40	398	0.854 L	5:40	5:40	5:40	5:40	5:40	5:40	5:42	6:24
8	7:34	298	1.520 L	7:34	7:34	7:34	7:34	7:36	8:52	10:08	11:24
10	9:26	239	2.374 L	9:26	9:26	9:26	9:53	11:52	13:51	15:49	17:48
12	11:20	199	3.418 L	11:20	11:20	11:24	14:15	17:05	19:56	22:47	25:38
15	14:10	159	5.342 L	14:10	14:10	17:48	22:15	26:42	31:09	35:36	40:04
18	17:00	133	7.692 L	17:00	19:13	25:38	32:03	38:27	44:52	51:16	57:41
21	19:50	114	10.470 L	19:50	26:10	34:54	43:37	52:21	61:00	69:48	78:31
24	22:40	99	13.674 L	22:47	34:11	45:34	56:58	68:22	79:46	91:10	102:33
27	25:30	88	17.306 L	28:51	43:16	57:41	72:07	86:32	100:57	115:22	129:48
30	28:20	80	21.366 L	35:37	53:25	71:13	89:02	106:50	124:38	142:26	160:15
33	31:10	72	25.852 L	43:05	64:38	86:10	107:43	129:16	150:43	172:21	193:53
36	34:00	66	30.768 L	51:17	76:55	102:34	128:12	153:50	179:29	205:07	230:46

Table 2 - Minimum Specified Time Required for a 0.5 psig Pressure Drop for Size and Length of Pipe Indicated for $Q = 0.0015$

Pipe Diameter, In.	Minimum time, min:s	Length for Minimum Time, ft	Time for Longer Length, s	Specification Time for length (L) Show, min:s							
				100 ft	150 ft	200 ft	250 ft	300 ft	350 ft	400 ft	450 ft
4	1:53	597	0.190 L	1:53	1:53	1:53	1:53	1:53	1:53	1:53	1:53
6	2:50	398	0.427 L	2:50	2:50	2:50	2:50	2:50	2:50	2:51	3:12
8	3:47	298	0.760 L	3:47	3:47	3:47	3:47	3:48	4:26	5:04	5:42
10	4:43	239	1.187 L	4:43	4:43	4:43	4:57	5:56	6:55	7:54	8:54
12	5:40	199	1.709 L	5:40	5:40	5:42	7:08	8:33	9:58	11:24	12:50
15	7:05	159	2.671 L	7:05	7:05	8:54	11:08	13:21	15:35	17:48	20:02
18	8:30	133	3.846 L	8:30	9:37	12:49	16:01	19:14	22:26	25:38	28:51
21	9:55	114	5.235 L	9:55	13:05	17:27	21:49	26:11	30:32	34:54	39:16
24	11:20	99	6.837 L	11:24	17:57	22:48	28:30	34:11	39:53	43:35	51:17
27	12:45	88	8.653 L	14:25	21:38	28:51	36:04	43:16	50:30	57:42	64:54
30	14:10	80	10.683 L	17:48	26:43	35:37	44:31	53:25	62:19	71:13	80:07
33	15:35	72	12.926 L	21:33	32:19	43:56	53:52	64:38	75:24	86:10	96:57
36	17:00	66	15.384 L	25"39	38:28	51:17	64:06	76:55	89:44	102:34	115:23

17.5 HYDROSTATIC PRESSURE AND LEAKAGE TEST OF FORCE MAINS

All sewer force mains and appurtenances shall be tested by a hydrostatic pressure test conducted at a minimum of 150 psig.

17.5.1 After the sewer force mains have been filled with water, the pressure shall be increased to the test pressure by means of a pump. The leakage test shall be in accordance with AWWA M23.

17.5.2 The CONTRACTOR shall furnish a pump, and all labor for conducting the test.

17.5.3 The duration of the hydrostatic leakage test shall be 2 hours or as specified by the CITY INSPECTOR or DEPARTMENT representative.

17.5.4 The source of water for the pump suction shall be potable water from the DEPARTMENT'S distribution system. The vessel used must be approved by the CITY INSPECTOR or DEPARTMENT representative.

17.5.5 The maximum leakage per hour for DI and PVC shall be as calculated from the following formula (All rubber gasket or 0-ring joints):

$$L = \frac{SD\sqrt{\quad}(P)}{148{,}000}$$

L = allowable leakage, (gallons per hour)
S = length of pipe tested, in feet
D = nominal diameter of pipe, (inches)
P = average test pressure during leakage test, (psig)

17.5.6 After the specified test pressure has been applied the entire pipeline shall be checked in the presence of the CITY INSPECTOR representative giving particular attention to that part of the pipeline and those appurtenances that are exposed. After the CONTRACTOR has taken the necessary action to repair or replace any part of the pipeline or appurtenances where leaks were apparent or if no leaks were apparent, the sewer force mains shall be subjected to a leakage test at the pressure specified with a meter inserted in the test pump discharge line.

17.5.7 If any test of pipe laid discloses leakage greater than the allowable leakage as calculated from above formula or table, the CONTRACTOR shall, at his expense, locate the leak or leaks and perform whatever work and/or replace whatever material that is required in order to remedy the defect and stop the leak and re-test the line. All corrective work must be approved by the DEPARTMENT.

17.5.8 Prior to the pressure test, the ENGINEER shall present an allowable leakage report to the CITY INSPECTOR.

17.6 **TESTING SAFETY PRECAUTIONS**

17.6.1 The low-pressure air test may be dangerous to personnel if, through lack of understanding or carelessness, a line is over pressurized or plugs are installed improperly. It is extremely important that the various plugs be installed so as to prevent the sudden expulsion of a poorly inflated plug. As an example of the hazard, a force of 250 pounds is exerted on an 8" plug by an internal pressure of 5 psi. Observe the following safety precautions:

(a) No person shall be allowed in the manholes during the test or when a plugged pipe is under pressure.
(b) Gauges, air piping manifolds and valves shall be located at the top of the ground. Install and brace all plugs securely.

17.7 **GROUND WATER ELEVATION**

17.7.1 If the pipeline to be tested is below the ground water level, the starting test pressure shall be increased by 0.433 psi for each foot the groundwater level is above the invert of the sewer pipe. In no case shall the starting test pressure exceed 9.0 psig.

17.8 **TEST EQUIPMENT**

17.8.1 All necessary equipment to perform the air test in accordance with this specification shall be provided by the CONTRACTOR. The test gauge shall be 4" and have incremental division of 0.10 psig and have an accuracy of at least $\pm$ 0.04 psig. In no case shall a test gauge be used which has incremental divisions of greater than 0.25 psig. The gauge shall be of sufficient size in order to determine this accuracy.

17.8.2 The ENGINEER shall furnish one copy of gravity sewer and manhole test results to the DEPARTMENT upon completion of gravity sewer system approval by the CITY INSPECTOR.

17.9 **MANDREL TEST**

17.9.1 The mandrel (go/no-go) device shall be cylindrical in shape and constructed with either 9 or 16 evenly spaced arms or prongs. Mandrels with fewer arms will be rejected as not sufficiently accurate. The contact length of the mandrel's arms shall equal or exceed the nominal ID of the sewer to be inspected. Critical mandrel dimensions shall carry a tolerance of $\pm$ 0.01". The mandrel and all necessary equipment for the mandrel test shall be provided by the CONTRACTOR. No handmade mandrel devices shall be used for testing unless prior permission is given by the DEPARTMENT or the CITY INSPECTOR.

17.9.2 The mandrel shall be hand-pulled by the CONTRACTOR through all flexible pipe sewer lines no earlier than 30 days after the trench has been completely backfilled. Any sections of the sewer not passing the mandrel shall be uncovered and the CONTRACTOR shall re-bed, re-round or replace the sewer to the satisfaction of the DEPARTMENT. Any repaired section shall be re-tested.

17.9.3 The OD of the mandrel shall be set according to the following table:

NOMINAL DIAMETER (IN)	MANDREL OD (IN)
8"	7.11"
10"	8.87"
12"	10.55"
15"	12.90"
18"	15.76"
21"	18.57"
24"	21.36"
27"	23.51"
30"	27.32"

17.10 **MANHOLE VACUUM TESTING**

17.10.1 The manhole vacuum test shall be performed with suitable apparatus made for such purpose and shall draw a vacuum of 10" of mercury (Hg). The test shall pass if the vacuum remains at 10" of mercury (Hg) or drops to not less than 9" of mercury (Hg) in one minute. Vacuum test will be performed by construction CONTRACTOR. Test shall be witnessed and documented by CITY INSPECTOR. Responsible ENGINEER shall furnish test result information to the DEPARTMENT. If, after 2 attempts to perform a satisfactory vacuum test have failed, the DEPARTMENT may require that the manhole be removed and re-poured. All sewer services entering the manhole shall be vacuum tested with the manhole.

17.10.2 If existing manhole is to be adjusted – either lowered or raised – and cone is removed – manhole will require a passing vacuum test.

17.10.3 Pre-vacuum testing is recommended on existing manholes. If manhole is cored, a post vacuum test shall be required except for the below circumstances:

If pre-vacuum test passes – a post vacuum test shall pass.
If pre-vacuum test fails – a post vacuum test will not be required.

17.11 **CLOSE CIRCUIT TELEVISION INSPECTION – (CCTV)**

17.11.1 All sewer mains that are installed as part of a new subdivision or large scale development and for the purpose of becoming part of a public sewer system, maintained by the City of Bentonville will require a Close Circuit Television Inspection (CCTV). The inspection will be performed by City personnel after all other required sewer main line testing has been completed. The inspection consists of hydro-jet cleaning the sewer main line and allowing it to drain for a period of not less than one hour. After the sewer main line has been allowed to drain the CCTV inspection will begin. Defects that will be documented are: Pipe bell ends facing downstream, narrow or rough manhole inverts, misaligned or backward service wyes, loose or missing pipe joint gaskets, pipe joints not fully seated, crushed, or out-of-round pipe and the pooling of water in the pipe and at service wyes, joints and manhole inverts. The camera has been fitted with a measuring device that can determine the depth of the water in the event of any pooling. Any pooling of water that is deeper than ¾" will require the sewer main line to be adjusted to eliminate the problem. The only personnel allowed in the CCTV vehicle during the inspection are City of Bentonville employees.

17.11.2 A pass or fail decision is not made in the field. The camera inspection is recorded on video recording software and then reviewed at the DEPARTMENT. After review of the recording, the comments will be made available to the responsible ENGINEER for the project indicating approval of the sanitary sewer mains or a list of defects that require repair.

17.11.3 All CCTV inspections or re-inspections that are necessary are to be requested in written form by email to the DEPARTMENT by the responsible ENGINEER for the development project. The responsible ENGINEER shall provide accurate record drawing of sewer system, with profiles, at time of CCTV request.

17.11.4 One attempt will be made by City staff to adequately clean new sewer mains for proper CCTV inspection. If during construction sufficient care is not taken to keep rocks, dirt or debris from entering new sewer mains and extra cleaning is necessary, CCTV staff will not complete the inspection. Department personnel will then advise the ENGINEER of record of the condition of the pipe. The contractor shall be responsible for the additional cleaning needs. It will be the ENGINEER of record's responsibility to communicate to the contractor why the inspection was stopped and why they are now responsible for cleaning and removing obstructions in the sewer main. After the contractor has completed the necessary cleanings, the ENGINEER of record will contact the DEPARTMENT and request continuation of the CCTV inspection.

17.11.5 After the completion of the required repairs by the CONTRACTOR, a re-inspection must be performed using the same procedures as for the initial inspection. All re-inspections will be billed to the OWNER/DEVELOPER according to current fee ordinance.

17.11.6 Full CCTV inspection shall be completed and 1st tracer wire inspection shall be completed before final inspection.

17.12 **ACCEPTANCE OF INSTALLATION**

17.12.1 No gravity sewer or manhole will be accepted that does not comply with the minimum requirements of tests described within these specifications.

17.13 **WARRANTY**

17.13.1 The DEPARTMENT reserves the right to inspect by mandrel test or camera inspection any sewer line before acceptance, and also prior to expiration of the first year of operation. If a previously

accepted line fails an inspection during the first year of operation, the defects must be corrected at the CONTRACTOR/DEVELOPER'S expense.

SECTION 18 SEWER LIFT STATIONS

18.1 The Wastewater Department must approve all plans.

18.1.1 The Wastewater Department lift station details contained in this specifications book are to be used as a guide only. **These details are not to be used as construction plans.**

18.2 FINAL ACCEPTANCE

18.2.1 The Wastewater Department, at the DEVELOPER'S expense, will purchase an alarm system at current market price. **This fee is required** and must be paid prior to the final inspection and acceptance of the lift station.

18.2.2 A spare pump must be furnished with each sewer lift station and delivered to the Wastewater Department prior to lift station final inspection and acceptance.

18.2.3 The electric and water meters shall be installed before a final inspection is requested.

18.2.4 A final lift station inspection shall be conducted at the DEVELOPER'S request once lift station construction has been completed, a pump startup has been performed and the alarm fee has been paid. Wastewater Department maintenance personnel must be present at the pump start up session. The lift station final inspection and development final inspections are separate inspections and will take place at separate appointments.

18.2.5 The DEVEOPER/CONTRACTOR shall be responsible for supplying alternate means of power for the pump start-up during final inspection.

18.2.6 Before final acceptance, 1 paper and 1 pdf copy of as-built drawing must be supplied to the Wastewater Department.

18.3 BASIC CONTROL PANEL SPECIFICATIONS

18.3.1 All electrical services shall meet City and State Codes.

18.3.2 A portable generator connector is required on lift station control panels. It must be an Appleton 200 Amp 4-W, 4-P style -1 type connector Cat # ADR20044 for 3Ø stations only

18.3.3 Control panel shall be NEMA 4X stainless steel mounted on a 6" X 6" stainless steel pedestal on the wet well and shall be sealed to prevent fumes from rising into control panel. Control panel and pedestal door shall open away from wet well hatch.

18.3.4 One combination circuit breaker/overload disconnect unit with magnetic trip elements sized for individual protection shall be provided for each pump. **Detail LS01 and LS02.**

18.3.5 One across the line magnetic contactor shall be provided per pump and sized in accordance with the maximum NEMA horsepower standards.

18.3.6 Control panels shall incorporate the following features as a minimum:

(a) Alternator shall be provided for duplex controls.
(b) Individual selector switches to provide "hand-off-auto" control of each pump.

(c) HAND POSITION - In this position, the pump controlled by the switch will run regardless of the wet well level. The pump will continue to run until the switch is turned to "off" or "auto" position.
(d) AUTO POSITION - In this position, the operation of the pumps is controlled automatically by the level sensors in the wet well. The control center will be designed to provide automatic operation, while maintaining motor protection.
(e) 24 or 120 volt AC control transformer protected on both the primary and secondary control circuit.
(f) Terminals shall be provided for connection of the level sensors.
(g) A hinged, removable dead-front panel is required.
(h) Pump running pilot lights (green) mounted on operator's control panel.
(i) Totalizer for each pump must be mounted on operator's control panel.

18.3.7 All operator controls, toggle switches, circuit breakers, etc., shall be accessible without removing the dead-front panel.

18.3.8 NEMA 4X stainless steel enclosures with draw pull catch, provisions for padlocking and suitable for indoor or outdoor mounting.

18.3.9 **Electrical connections in the wet well are not allowed.**

18.3.10 Coordinate with Bentonville Electric Department prior to project start to determine type of electrical service. Three-phase 480 VAC power must be used when available.

18.3.11 An approved lightning arrester must be installed.

18.3.12 3-phase power monitor must be installed to protect pump from low voltage, single phasing and phase reversal.

18.3.13 The level control system sensors must be submersible transducer, floats or equivalent. If a transducer control is installed the system shall have a float backup.

18.3.14 Electrical terminal strip must be a minimum of 4" above the bottom of the control panel.

18.4 **LEVEL CONTROLS**

18.4.1 Provide a switch control system incorporating a hermetically sealed liquid level indictor as a level sensing and signal control device for automatic control of lift station. The system shall monitor and control wet well level at each station as follows:

SWITCH 1 – All Stop
SWITCH 2 – Energize Lead Pump
SWITCH 3 – Energize Lag Pump
SWITCH 4 – High Level Alarm

18.4.2 **High level alarms are required. A red warning light with flasher and audible alarm shall be installed on the control panel.**

18.4.3 Contingent upon wet well level, float system shall cause indicator/controller to energize appropriate control contacts.

18.5 **ACCESS ROAD**

18.5.1 A paved access road shall be provided from the curb to the lift station.

18.5.2 The road leading to the lift station shall be asphalt, a minimum of 12' wide and no greater than a 10% slope. A minimum of 6" of compacted base material is required. Base material and compaction shall be in accordance with the latest edition of ARDOT Standard Specifications (Division 300). A minimum of 4" of asphalt is required. Paving materials and construction methods shall be in accordance with the latest edition of the ARDOT Standard Specifications (Division 400).

18.6 **LIFT STATION AND SITE**

18.6.1 Lift station site and access road shall be deeded to the City of Bentonville.

18.6.2 Minimum lot size shall be 50' X 50'.

18.6.3 Lift station lot shall be 2' above surrounding project area. Wet wells shall be 8" above the asphalt.

18.6.4 Lift station lot shall be asphalt. A minimum of 6" of compacted base material is required. Base material and compaction shall be in accordance with the latest edition of the ARDOT Standard Specification (Division 300). A minimum of 4" of asphalt is required. Paving materials and construction methods shall be in accordance with the latest edition of the ARDOT Standard Specifications (Division 400).

18.6.5 Based on the location of the lift station, the City of Bentonville Wastewater Department will determine the type of 8' fence requested to be installed. All fence poles or columns will be set 1' inside the asphalt with 14' roll back or swing type gates.

18.6.6 A pole mounted LED photocell light that conforms to the Subdivision Code for outdoor lighting shall be provided to adequately illuminate the control panel and site.

18.6.7 There shall be a frost free, 2' min bury water hydrant, at each lift station. The hydrant shall be protected by a reduced pressure zone backflow prevention device. The device must be protected from freezing by an approved enclosure. See Cross Connection Control Program Specifications. **Detail W14**

18.7 **PUMP REQUIREMENTS**

18.7.1 All lift stations require rail mounted submersible pumps as manufactured by Flygt or Hydromatic, or HCP and interchangeable without alteration to the piping or electrical system. **Details LS04 and LS05.**

18.7.2 Lift stations requiring less than 5-HP pumps must be grinder pumps. Larger pumps should have shredder type impellers when possible. **Detail LS05.**

18.7.3 All pumps will meet or exceed the requirements to pump the anticipated flow for the known number of houses, units, or number of persons. The pumps will meet or exceed required head values based on ENGINEERS design. At a minimum, all lift stations shall be duplex, two pumps of the same size that alternate pumping.

18.7.4 Any time it is determined through an analysis that a development or subdivision impacts or exceeds the capacity or the flow of an existing lift station, the existing lift station shall be upgraded. The existing lift station shall be upgraded with equipment including pumps, piping and control panel components that are consistent with the existing equipment.

18.8 LIFT STATION PLUMBING

18.8.1 Plumbing shall be constructed in such a manner that the force main velocity is never below 2' per second and never above 8' per second. All lift station mounting rails, cables, chains and hardware shall be 316 stainless steel. All lift station piping shall be Type 316L stainless steel (in accordance with ASTM A312 and 150 psi minimum), and stainless steel piping shall extend from the pump to three feet outside the valve vault.

18.8.2 All lift station wet wells and valve vaults shall be concrete with aluminum hatches to allow access to pumps and valves. Wet well hatch shall open toward the control panel.

18.8.3 The lift station will be constructed of concrete with reinforcement material. All plumbing entering or leaving the wet well shall be grouted to prevent infiltration.

18.8.4 Piping shall be sized to meet flow needs.

18.8.5 Gate Valves and Check Valves are required on both discharging lines.

18.8.6 A stainless steel chain shall be hooked to each pump for removal.

18.8.7 All lift station wet wells shall be vented by a 4" stainless steel pipe with bird screen.

18.9 VALVE VAULTS AND WET WELLS FOR LIFT STATIONS

18.9.1 Wet wells shall be a minimum of 8' in diameter and a minimum of 10' in depth. Alternate Storage (i.e. equalization basin) may be required at certain locations, which will be determined by the Wastewater Department. EQ shall be the same size as the wet well.

18.9.2 Wet wells shall be 8" above the asphalt.

18.9.3 Wet well walls shall be a minimum of 8" thick with #4 rebar on 12" centers. The base of the wet well shall be designed to resist the buoyance/floating with the wet well empty.

18.9.4 Wet well bottom rebar spacing - #4 bar on 6" centers.

18.9.5 Wet well top shall be a minimum of 6" thick with # 4 rebar on 6" centers.

18.9.6 Wet well access shall be cast-in-place, grout will not be accepted.

18.9.7 All interior concrete walls of new lift station wet wells will be epoxy coated prior to lift station approval and being brought into service. Epoxy coating will be 100% epoxy at a minimum application thickness of 125 mils after the installation of a ½" of cementitious lining has been applied . Epoxy is added to extend the service life of the concrete wet well walls.

18.9.8 Valve vault walls shall be a minimum of 6" thick.

18.9.9 Valve vault base shall be a minimum of 6" thick.

18.9.10 Valve vault top shall be a minimum of 6" thick with # 4 rebar on 6" centers.

18.9.11 Vaults and wet wells shall be of all concrete construction incorporating a double aluminum access lid. Door shall open to 90°, lock automatically in position; have closed position lock hasp and

retractable grip for opening and closing with one hand. Lid shall support a minimum live load of 150 pounds per square foot. **Details LS06 and LS07.**

18.9.12 Vaults and wet wells shall be constructed on a minimum of 6" of SB2 base material. Steps shall not be incorporated. Maximum vault depth shall be 5' from access hatch to base.

18.10 VALVES

18.10.1 Check valves shall be swing type with iron body and flanged ends mounted in the horizontal position only and shall be located in a valve vault not exposed to wastewater. 2" check valves may be IPT.

18.10.2 Gate valves 4" and larger shall be of the resilient seat type and meet the requirements of AWWA C515 latest revision. Valves shall have non-rising stems and close right (clockwise). Valves shall have flanged ends and have a 2" operating nut or hand wheel. Valves smaller than 2" shall meet AWWA C500. Acceptable manufacturers for all sizes include; American Darling, Clow, Kennedy, Mueller or equal. Gate valves shall be mounted horizontally in valve vault with no exposure to wastewater.

18.10.3 Plug valves are an acceptable means for isolation and shall be flanged Dezurik or Pratt equal.

SECTION 19 SEWER LIFT STATIONS – PRIVATE

19.1 Plans shall be provided to the DEPARTMENT for approval before construction begins.

19.2 LIFT STATION SITE

19.2.1 An unobstructed access to the lift station shall be provided and maintained.

19.2.2 The lift station shall have a minimum wet well diameter of 2' and a minimum depth of 6'.

19.3 BASIC CONTROL PANEL SPECIFICATIONS

19.3.1 The lift station shall have a control center to provide automatic and manual operation. A Hand – Off – Automatic switch shall be included for each pump.

19.3.2 Station shall operate on a minimum of 220 V AC.

19.3.3 One "across the line magnetic contactor" per pump sized to HP and NEMA standards shall be provided and installed.

19.3.4 Control center shall have a locking hasp.

19.3.5 Alternator shall be provided for duplex units.

19.3.6 A lighting arrester shall be installed for pump protection.

19.3.7 High level alarms are required. A red warning light with flasher and audible alarm shall be installed on the control panel for easy monitoring.

19.3.8 An identification plate listing contact information, name, address and phone number of responsible party will be attached to the control panel and a copy issued to the Wastewater Department.

19.4 PUMP REQUIREMENTS

19.4.1 Pumps shall be Flygt, Hydromatic, or HCP and must be approved in writing by the Wastewater Department.

19.4.2 Pumps shall be mounted on stainless steel slide rails and use Campbell type pump connector or equivalent.

19.4.3 Pumps shall have stainless steel lifting chains or stainless steel lifting cables for pump removal and installation.

19.4.4 All pumps shall meet or exceed the minimum requirements to pump the anticipated flow for the known number of units or number of persons. The pumps shall meet or exceed required head values based on ENGINEER's design.

19.4.5 Pump impellers shall be grinder type impellers.

19.4.6 Before final acceptance, 1 paper and 1 pdf copy of as-built drawing with contact information must be supplied to the Wastewater Department.

SECTION 20 CROSS-CONNECTION CONTROL PROGRAM MANUAL

20.1 GENERAL

This document sets forth the Bentonville Water Utilities Cross-Connection Control Program, and is adopted within the water and sewer specifications for the purpose of regulating cross-connection hazards by the operating staff and management of the DEPARTMENT.

20.2 INTRODUCTION

This program prohibits uncontrolled cross-connections within the water distribution system of the Bentonville Water Utilities, authorizes the DEPARTMENT to conduct inspections of the consumers' property, requires that cross-connection hazards be corrected or controlled and provides for enforcement.

20.3 PURPOSE

The purpose of this program is to:

20.3.1 Protect the public potable water supply of the City of Bentonville from the possibility of contamination or pollution from backflow into the Water System.

20.3.2 Promote the elimination or control of existing cross-connections, actual or potential, between the customer's potable water system(s) and nonpotable water systems, plumbing fixtures, and industrial piping systems.

20.3.3 Provide for a continuing program of cross-connection control that will systematically and effectively prevent the contamination or pollution of potable water systems.

20.4 DEFINITIONS

The following terms shall have the stated meanings:

20.4.1 APPROVING AUTHORITY: the DEPARTMENT or its designated agent(s).

20.4.2 AUXILIARY WATER SUPPLY: any water supply, on or available to the property other than the Water System.

20.4.3 BACKFLOW: flow of water or other liquids, mixtures or substances, under positive or reduced pressure in the distribution pipes of a potable water supply from any source other than its intended source.

20.4.4 BACKFLOW PREVENTION ASSEMBLY ("BACKFLOW PREVENTION ASSEMBLY" OR "ASSEMBLY"): a mechanical backflow preventer assembly constructed with shut-off valves, and provided as a complete assembly by a single manufacturer, used to prevent the flow of contaminants or pollutants into the Water System. **The assembly must have the approval of the FCCCHR, ADH, and the DEPARTMENT.**

20.4.5 BACKFLOW PREVENTION DEVICE: a mechanical back-flow preventer without shut-off valves on any side of the backflow prevention mechanism.

20.4.6 BYPASS: any arrangement of pipes, plumbing, or hoses designed to divert the flow around an installed device or assembly through which the flow normally passes.

20.4.7 CERTIFIED ASSEMBLY TESTING TECHNICIAN: a person certified by the Arkansas Department of Health as an Assembly Testing Technician.

20.4.8 CERTIFIED ASSEMBLY REPAIR TECHNICIAN: a person certified by the ADH as an Assembly Repair Technician.

20.4.9 CITY: the City of Bentonville, Arkansas.

20.4.10 CONSUMER: a "person" or facility receiving service from a potable water system.

20.4.11 CONTAMINANT: a biological agent or chemical compound, which can cause disease or threat to health.

20.4.12 CROSS CONNECTION: any actual or potential connection between the Water System and a source of contamination or pollution.

20.4.13 CROSS CONNECTION CONTROL: the use of backflow prevention assemblies, methods and procedures to prevent contamination or pollution of a potable water supply through cross connections.

20.4.14 DIRECT CROSS-CONNECTION: a cross-connection which is subject to both backsiphonage and backpressure.

20.4.15 DOMESTIC WATER SERVICE: refers to plumbing as defined by the State of Arkansas Plumbing Code that is not associated with designated fire protection water service lines and systems.

20.4.16 DOUBLE CHECK VALVE ASSEMBLY (DCVA): a backflow prevention assembly consisting of two (2) independently operating check valves, four (4) test cocks, and two (2) shut-off valves. DCVA's are only appropriate for use against non-health hazards.

20.4.17 DETECTOR DOUBLE CHECK VALVE ASSEMBLY (DDCVA): a DCVA with an additional smaller DCVA with a flow detector meter in parallel, used to detect system leaks and unauthorized use.

20.4.18 DETECTOR REDUCED PRESSURE ZONE ASSEMBLY (DRPZA): an RPZA with an additional smaller RPZA with a flow detector meter in parallel, used to detect system leaks and unauthorized use.

20.4.19 FIRE PROTECTION SYSTEM: a fire protection system consisting of one or more of the following: pipes, sprinklers, valves, fixtures, fittings, ponds, tanks, water storage vessels and fire hydrants that are intended and used exclusively for fire protection.

20.4.20 HAZARD: any contaminant or pollutant which if it enters the potable water system causes a risk to public health or has an adverse effect on the public potable water system.

20.4.21 INDIRECT CROSS-CONNECTION: a cross-connection which is subject to backsiphonage only.

20.4.22 INSPECTOR: a person authorized by the APPROVING AUTHORITY to perform inspections of consumer's facilities to determine compliance with the Program.

20.4.23 MULTIPLE SERVICES: two or more water service connections. When two or more water suppliers are involved, the multiple service connections constitute an "auxiliary source" of water on the property.

20.4.24 NEW CONSTRUCTION: construction of a new facility, alteration of or addition to an existing facility, or modification of or addition to existing plumbing and fire protection systems.

20.4.25 PERMIT: a document issued by DEPARTMENT that allows the use of a backflow prevention assembly at the Consumer's service connection.

20.4.26 PERSON: any individual, partnership, company, public or private corporation, political subdivision or agency of the United States or any other legal entity.

20.4.27 POLLUTANT: a biological or chemical substance which do not pose a health hazard, but reduces the aesthetic quality of water.

20.4.28 POTABLE WATER: any water which, according to recognized standards, is safe for human consumption.

20.4.29 PROGRAM: the Bentonville Water Utilities Cross-Connection Control Program.

20.4.30 RESPONSIBLE MANAGING EMPLOYEE (RME): an individual or individuals who shall be designated by each company that plans, sells, installs, maintains, or services a fire protection sprinkler system on a full time basis to assure that each fire protection sprinkler system as installed, maintained, or serviced, meets the standards as provided by state law.

20.4.31 REDUCED PRESSURE ZONE ASSEMBLY (RPZA): a backflow prevention assembly consisting of four (4) test cocks, two (2) shutoff valves, two (2) independently operating, spring-loaded check valves with a reduced pressure zone between the checks valves. The zone contains a relief port, which will open to atmosphere if the pressure in the zone falls within two (2) psi of the supply pressure. The assembly provides protection against both backpressure and back-siphonage.

20.4.32 RETROFIT: replacement of an existing device or backflow prevention assembly when the specifications or condition of the device or assembly are not adequate for the degree of hazard found on the property as defined by this program.

20.4.33 SERVICE CONNECTION: a piping connection between the water main of the Water Utilities and a consumer's system.

SECTION 21 ADMINISTRATION

21.1 AUTHORITY OF APPROVING AUTHORITY

21.1.1 APPROVING AUTHORITY is hereby authorized to:

21.1.2 Protect the public water distribution system from contamination or pollution due to the backflow or backsiphonage through the water service connection.

21.1.3 Conduct a program, which includes routine survey of commercial, institutional and industrial establishments for possible contamination or pollution.

21.1.4 Review construction plans and determine requirements for backflow prevention assemblies. This shall apply to new construction, alteration or additions, as well as, modification of existing fire protection systems.

21.1.5 Provide installation criteria for backflow prevention assemblies and issuance of permits prior to construction.

21.1.6 Conduct a final inspection of backflow prevention assembly installations to verify conformance with approved installation plans.

21.1.7 Ensure that RPZA's used for fire hydrants are performance tested and have a backflow prevention assembly permit.

21.1.8 Maintain RPZA's and meters for issue to water users needing temporary water service from fire hydrants.

21.1.9 Ensure RPZA's used by customers are tested annually and before issue/use. (Within ten (10) days of installation)

21.1.10 Verify collection of fees for permits.

21.1.11 Verify fire hydrant RPZA's and meters are set and removed by DEPARTMENT Personnel.

21.1.12 Submit all required reports, maintain a database, coordinate with other agencies to accomplish the goals of the Program and maintain the following records:

(a) Master files on customer Cross-Connection Tests.
(b) Master files on Cross-Connection Permits.
(c) Copies of permits and permit applications.
(d) Copies of lists and summaries supplied to the ADH.
(e) Number of annual tests conducted on backflow prevention assemblies.
(f) Number of cross-connection control surveys performed.
(g) Total number of each type of backflow prevention assemblies installed.

(h) The following information is required per assembly: DDCVA and DRPZA are made up of two (2) assemblies, each requiring record data.

(1) Organization or Customer's name, mailing address, phone #, contact name, assembly address, permit # and account number.
(2) Type installation, problem history, location on property, installed by, phone # and type of service.
(3) Name of the manufacturer, model number and serial number of assembly.
(4) Type of assembly, date of installation and installation specifications.
(5) Number of the DEPARTMENT meter, if any.
(6) Date of initial cross-connection survey, survey results and type of actual or potential hazard.
(7) Date of initial permit and current permit number.
(8) Test results before and after repair or maintenance and date of latest retest.
(9) Maintenance performed, repairs made, replacement parts, part numbers and date repairs were made.
(10) Information on backflow through the assembly.

21.1.13 Maintain an inventory of all commercial, institutional and industrial locations with complete information on cross connection devices or assemblies installed.

21.1.14 Ensure meters on fire protection assemblies are read and consumer advised of water usage.

21.1.15 Coordinate repairs on any damage resulting from vandalism or flooding of backflow prevention assemblies.

21.1.16 Ensure a Certified Assembly Repair Technician is responsible for all repairs performed on an assembly. A Journeyman or Master Plumber's License shall be required when installing backflow prevention assemblies within the scope of the plumbing system.

21.1.17 Verify only Certified Assembly Testing Technicians perform testing on backflow prevention assemblies.

21.2 **POWERS AND AUTHORITIES OF INSPECTORS**

21.2.1 The APPROVING AUTHORITY or duly authorized employees of the DEPARTMENT or the City bearing proper credentials and identification shall be permitted to enter all properties for the purposes of inspection, observation and testing to verify adherence to the provisions of this program. Authorized personnel shall have authority to inspect and copy records pertaining to the threat of a hazard to the Water System.

21.2.2 The consumer's property shall be available for inspection at all reasonable times to authorized representatives of the APPROVING AUTHORITY to determine whether cross connections or other structural or sanitary hazards, including violations of the Program, exist.

21.2.3 On request by the APPROVING AUTHORITY, the consumer shall furnish information on water use practices within the consumer's premises.

21.3 **CROSS-CONNECTION SURVEYS**

21.3.1 Personnel authorized by the APPROVING AUTHORITY will survey the property of consumers considered likely to have cross-connections to determine if backflow can occur. Routine surveys will be made periodically to determine if backflow prevention measures are maintained, are functioning properly and new cross-connections have not been created.

21.4 **SCHEDULING SURVEYS, PRIORITIES**

21.4.1 The selection of existing property for cross-connection surveys will be made on the basis of suspected hazard. Those customers suspected of having the most hazardous cross-connections will be surveyed first. Surveys shall continue until all property considered likely to have cross-connection problems have been surveyed. Information for the review process will be obtained from questionnaires sent to industrial, commercial and institutional establishments.

21.5 **OTHER SURVEYS**

21.5.1 Cross-connection surveys will continue with the aim being to survey all industrial, commercial or institutional type customers and agricultural operations that may pose a hazard. Prompt attention will be given to identifying residential type customers that may have significant cross-connection problems.

21.6 **FOLLOW-UP SURVEYS**

21.6.1 Follow up surveys shall be made on a frequency established by the Minimum Standards for a Cross-Connection Control Program from the ADH – Division of Engineering.

21.7 **ENFORCEMENT ACTION**

21.7.1 Where backflow prevention is required, the APPROVING AUTHORITY shall require the problem to be eliminated or controlled by a properly installed, approved backflow prevention assembly. Such protective measures may include but not be limited to a backflow prevention assembly on the consumer's water service line. Every effort will be made to secure the voluntary cooperation in correcting cross-connection hazards. If voluntary corrective action cannot be obtained within a reasonable period of time, the water service shall be terminated.

SECTION 22 PUBLIC WATER SYSTEMS

22.1 AUXILIARY PUBLIC WATER SYSTEMS

22.1.1 The Water System shall be protected as outlined in the **Arkansas Department of Health publication, "Policies and Procedures for Backflow Prevention Devices Location and Installation"** by an approved method of backflow prevention at the point of connection to the Water System if a public water supply other than the Water System is available to the premises. Backflow prevention is required regardless of actual development or cross-connection between the Water System and the other public water system.

22.1.2 RPZA Containment is required if the auxiliary water supply is not operating under the authority of the ADH.

22.1.3 Backflow prevention is not required if the auxiliary water supply is being operated under the authority of the ADH, and has properly conducted sanitary control and cross-connection control programs, and provides potable water to the Water System.

SECTION 23 DOMESTIC WATER SERVICE LINES

23.1 GENERAL

23.1.1 The information on backflow preventers described in this section is extracted from the ADH publication, "Policies and Procedures for Backflow Prevention Devices Location and Installation".

23.2 **COSTS**

23.2.1 The consumer of a property shall bear the expense and burden of protecting the Water System from the potential hazard through approved backflow prevention methods and procedures.

23.3 **RPZA CONTAINMENT**

23.3.1 Any building strictly consisting of commercial use or mixed-use shall be protected from cross-connection backflow by an approved RPZA containment assembly.

23.3.2 Any multi-story building, hotel, apartment house or private structure when a booster pump is used that furnishes water to all or part of the property, or where there is the potential for a cross-connection; it shall be protected from cross-connection backflow by an approved RPZA containment assembly.

23.3.3 Any Establishment's use such as, but not limited to the following that contain a risk to cross-connection on the premises:

Aircraft Plants (with industrial water)
Asphalt Plants
Automotive Plants
Autopsy Facilities
Baking Facility
Battery Manufacturer
Breweries
Beverage Bottling Plants
Blood Banks
Bottled Water Manufacturing
Broiler Houses
Canneries (except small plants without industrial fluids)
Car Wash Facilities
Chemical Plants
Cleaners (processing plant)
Cold Storage Plants
Colleges (with laboratories)
Compressed Gas Handling Facilities
Concrete Mixing Plants
Crime Laboratories
Dairies and Milk Distributors
Dental Facilities
Dye Works
Film Laboratories
Food Processing Plants
Funeral Homes
Golf Courses
Gravel Processing Plants
Hazardous Waste Processing
Health Clinics
Health Clubs and Fitness Centers
Hospitals
Laboratories
Landfills
Laundries (excluding Laundromats)
Liquid Gas Handling Facilities
Livestock Operations (excluding small non-commercial operations without industrial fluids)
Lumber Processing Plants
Medical Facilities, Health, Chiropractic, Veterinary
Metal Plating, Etching, Passivation or Pickling Plants
Mines and Quarries
Missile Plants (with industrial water)
Morgues
Mortuaries
Motion Picture Studios (with industrial water)
Natural Gas Handling Facilities
Nursery, Shrubbery or Garden Centers
Nursing Homes or convalescent homes
Oil Handling Facilities
Packing Houses (except small plants without industrial fluids)
Pesticide Processors or Applicators
Paper and Paper Product Plants (with industrial fluids)
Poultry Operations (excluding small non-commercial operations without industrial fluids)
Power Plants (excluding small heating or compressing systems)
Pressure Vessel Repair, Testing and Maintenance Facilities
Propane or Butane Gas Handling Facilities
Radioactive Material Plants and Handling Facilities
Railroads

Recycling Facilities
Reduction Plants
Restricted, Classified or Other Closed Facilities
Rubber Manufacturing Plants (excluding small plants)
Sand Processing Plants
Sanitariums
Schools (with laboratories)
Sod Farms
Steel Manufacturers (using Industrial Fluids)
Swimming Pools
Tank Repair, Cleaning, Testing and Maintenance Facilities
Taxidermist
Wastewater Plants and Pump Stations
Water Front Facilities and Industries, excluding:
(premises without docks-cafes, comfort stations, concessions, office buildings, or private residences)
Water Treatment Plants and Pump Stations
Zoos

23.3.4 Multiple Water Services: If there is a potential for two or more water service lines being interconnected; and there is a potential high hazard on the premises, or the water is used for other than domestic purposes.

23.3.5 Private Water System: If there is an auxiliary water supply on or available to the premises that is a potential high hazard, including a fire protection system.

23.3.6 Used Water and Industrial Fluids: If there is a used water or industrial fluid system on the premises that is a potential high hazard.

23.3.7 Solar Heating Systems: If there is a solar heating system on the premises, and chemicals are added to the solar heating system or the solar heating system is not used exclusively for once through heating (i.e. domestic hot water.)

23.3.8 Chemically Contaminated Water Systems: If chemicals are used as an additive to the water, or the water is subjected to additional treatment, or water is used on the premises to transport chemicals or chemicals are used with water on the premises in compounding or processing.

23.3.9 Sewers and Storm Drains: Any premises used for handling sewage or storm water (e.g. treatment and processing facilities, pumping plants, gauging stations, lift stations, ejector plants.)

23.3.10 Public Fire Hydrants as Temporary Water Services: The Water System shall be protected by an approved RPZA on the outlet of any fire hydrant when it is used as a water supply, except when used to extinguish a fire.

23.3.11 Irrigation System: If there is an irrigation system on the premises.

23.3.12 All RPZ backflow devices used for domestic water service will need to be a low lead device to meet the current Safe Water Drinking Act section 1417.

23.3.13 All new structures in a mixed use zoning based on the City of Bentonville zoning map that allows for a mix of uses including but not limited to commercial and industrial uses accompanied with a residential use, shall be required to have a backflow permit and an RPZ backflow assembly.

23.3.14 At the time of construction all structures within the mixed use zone may utilize a spool or like method and floor drain in lieu of installation of the backflow device if all current uses are strictly residential. In the event of a shared meter the spool or like method must be removed and an appropriate backflow assembly be installed at the first change of use within the structure.

23.3.15 All new structures shall depict the location and type of backflow assembly on the construction plans. In the event of a spool or like method, the construction plans shall depict the location. The construction plans shall be reviewed and approved by the City of Bentonville Water Utilities Department prior to construction.

23.3.16 All current buildings that change their use and are allowed commercial uses doing a remodel or renovation that requires a building or plumbing permit that does not have a current RPZ will be required to bring the existing building (or suite if metered separately) up to meet current specifications.

23.3.17 All Code Compliance applications for a current commercial building or suite not currently protected by an RPZ will be required to have a permit and bring the existing building (or suite if metered separately) up to meet current specifications.

23.4 **CONTAINMENT NOT REQUIRED**

23.4.1 Residential Systems: Used exclusively for domestic purposes (without irrigation).

23.4.2 Solar Heating Systems: Used exclusively for once through heating (i.e. domestic hot water), and no chemical additives are used in the system.

23.5 **RETROFIT**

23.5.1 All presently installed backflow prevention assemblies and devices that do not meet the requirements of this program but were approved assemblies for the purposes described herein at the time of installation and have been properly maintained, shall, except for the inspection, testing and maintenance requirements, be excluded from the requirements of these rules so long as the APPROVING AUTHORITY is assured that they will satisfactorily protect the Water System.

23.5.2 If the existing assembly is moved or requires more than the minimum maintenance or, the APPROVING AUTHORITY determines that the operation or maintenance of this assembly constitutes a hazard, the assembly shall be replaced by an approved backflow prevention assembly.

SECTION 24 FIRE PROTECTION SERVICE LINES

24.1 **CLASSES OF FIRE PROTECTION SYSTEMS**

24.1.1 Class 1 - A fire protection system directly connected to the Water System as the only water supply - no pumps, tanks or reservoirs; no physical connection to auxiliary water supplies; no antifreeze or other additives of any kind; all fire protection system drains discharging to atmosphere, dry wells or other safe outlets.

24.1.2 Class 2 - A fire protection system that is the same as a Class 1 system; except that a booster pump is installed in the fire protection system, and no outlet is located between the booster pump and the Water System. (Note - Booster pumps alone do not affect the potability of the system. In Class 2 fire protection system, it is necessary to avoid low or negative pressures that can occur by excessive flow through the booster pump. A minimum pressure of 20 psig on the inlet side of the booster pump shall be maintained through proper design, construction, operation and maintenance in addition to the use of a low pressure cutoff switch, pump modulating valve, or other automatic device.)

24.1.3 Class 3 – Direct connection from public water supply mains, plus one or more of the following: elevated storage tank, fire pump taking suction from above ground covered reservoir, tank, or pressure tank. Such storage facilities are filled or connected to public water only and the water in the tank is to be maintained in a potable condition. (Note: Unless the storage tank is owned and operated by the public water system, the assumption will be made that the water in the tank is non-potable, making it a Class 4 installation).

24.1.4 Class 4 - A fire protection system that is the same as a Class 1 or Class 2 system; except that an auxiliary water supply is on or available to the properties, or there is an auxiliary water supply designated by the DEPARTMENT within a radius of 1,700-feet from a pumper connection to the fire protection system. (Note - Connection to an auxiliary water supply cannot exist in a Class 4 fire protection system.)

24.1.5 Class 5 - A fire protection system that is connected to an auxiliary water supply which could be exposed to a high hazard (e.g. non-potable reservoirs, rivers, ponds, wells, industrial water), or that uses

additives (e.g. antifreeze, wetting agents, "Foamite"), or that does not maintain a minimum pressure of 20 psig on the inlet side of a booster pump as defined for a Class 2 fire protection system.

24.1.6 Class 6 - A fire protection system that is connected to a water service line from the Water System if the water service line is not used exclusively for fire protection.

24.2 BACKFLOW PREVENTION ON FIRE PROTECTION SYSTEMS

24.2.1 The Water System shall be protected by an approved method of backflow prevention in water service lines to fire protection systems, regardless of backflow prevention requirements in other water services on the premises.

24.2.2 Classes 1, 2 & 3: An approved DDCVA is required as the minimum backflow prevention in the water service line to a Class 1, 2 or 3 fire protection system. An approved DRPZA shall be required on any system with hose drops or standpipe outlet.

24.2.3 Classes 4, 5 & 6: An approved DRPZA is required in the water service line to a Class 4, 5 or 6 fire protection system.

24.2.4 Strainers are not required to be installed on fire protection systems.

24.3 RETROFIT OF EXISTING SYSTEMS

24.3.1 This applies to an existing fire protection system, which is modified, extended, or enlarged. Such systems include a modification or extension to an existing network (distribution piping, sprinkler heads control valves, etc. are added to or replaced in an existing system), or where an additional fire protection system (new feed line, riser, control valve, distribution piping, sprinkler heads, etc.) will connect to a fire main which has an existing cross-connection control device.

24.3.2 If the existing assembly is moved, or requires more than the minimum maintenance or the APPROVING AUTHORITY determines that the operation or maintenance of this assembly constitutes a hazard, the assembly shall be replaced by an approved backflow prevention assembly.

24.3.3 The minimum protection for cross-connection control for existing systems is the same as listed for new systems, except as noted for Class 1 and 2 systems only.

24.3.4 The installation of a properly sized assembly may cause an excessive pressure loss in some altered Class 1 and 2 systems. Such loss could make the system non-compliant with **NFPA Pamphlets 13 and 14 as adopted**.

24.3.5 The RME shall document to the APPROVING AUTHORITY that reasonable modifications will not compensate for the additional loss.

24.3.6 The documentation shall contain a listing of the minimum flow and pressure, headloss summary, desired and calculated sprinkler head output and a summary of the options examined to reduce headloss.

24.3.7 For these installations, if not already installed, the existing cross-connection control device will be replaced with two check valves in series (one of which can be the alarm valve), each valve meeting AWWA C510, UL 312-88, or UL 193-88, or the latest versions thereof, and equipped with a resilient seating surface. Valves on assemblies for fire protection services shall meet the appropriate recognized standard of UL and FM Global listed or approved for use in Fire Protection Systems. The valves or adjacent piping shall be equipped with a sufficient number of resilient seated test cocks (minimum diameter of one quarter to one-half inch) to determine the effectiveness of each valve (there shall be no leakage past any check valve). Sufficient isolation valves-one valve upstream of the valves and one valve downstream of the valves - shall be present or added to the system to permit this testing.

24.3.8 Existing fire protection systems which are not being modified, enlarged, or expanded are not required to upgrade to comply with this policy unless a hazard is found within the fire protection system.

24.3.9 For Class 1 and 2 systems, if the hydraulic analysis for the modified, extended, or enlarged system demonstrates that the installation of a properly sized cross-connection control device will increase the pressure loss so as to make the system noncompliant with the Rules and Regulations for Sprinkler Systems of the Arkansas Fire Protection Licensing Board (less than the minimum flow required by state fire sprinkler regulations), and that reasonable modifications to the system cannot compensate for the additional losses, the Responsible Managing Employee (RME) of the fire protection firm will document[1] that as part of the submittal to the ADH. ([1]**Refer to Section 24.7.2**)

24.4 ASSEMBLY INSTALLATION

24.4.1 **The following conditions apply to Class I through Class 6 systems:**

24.4.2 Backflow preventers must be tested within 10 days of placing the fire sprinkler system "on stream" and annually thereafter by a state certified Assembly Test Technician. A copy of the test report must be sent to the local water utility.

24.4.3 Reduced pressure type backflow prevention assemblies shall not be installed in pits or vaults. Double check valve assemblies must be installed above ground, if possible. However, if review and approval by the ADH permits below grade installation of a double check valve assembly because of unique conditions at the job site then the below grade unit must be placed in a vault which is located in a well drained area.

24.4.4 Installers of fire protection equipment must be licensed by the Fire Protection Licensing Board.

24.5 PLAN APPROVAL

24.5.1 All plans submitted to the ADH for approval shall indicate the name and license number of the RME. **Section 5**

24.5.2 There shall be no deviation from backflow prevention assembly installation plans and specifications once approved by the ADH and the DEPARTMENT unless revised plans and specifications have been first re-submitted for review and re-approval and written consent given by said authorities.

24.5.3 Plans for connection to fire protection systems must be submitted to the ADH and the local water utility for review and approval prior to beginning installation work. Submittals must include the following elements (include the elements appropriate to the project):

(a) A utility plan showing location of the fire main, property lines, and easements.
(b) Material of construction of the fire main.
(c) Pressure class of the fire main.
(d) Fire sprinkler connection details; including the following:
(e) Test flow information at the job site; including flow rate, static and residual pressures.
(f) Location of the backflow preventer.
(g) Make, model number, size, and type DC, RP, DCDA, or RPDA.
(h) Show where the FDC line takes off from the riser or verbally describe the location.
(i) Show flow calculations or certify that the flow through the backflow preventer will not exceed the maximum rated flow for the unit as indicated in the table show below.

24.5.4 Reduced pressure type backflow prevention assemblies shall not be installed in the vertical position unless approved by the Foundation for Cross-Connection Control and Hydraulic Research (FCCCHR), University of Southern California, Los Angeles, CA.

24.6 **DEFINITIONS**

24.6.1 Double check valve assembly (DCVA): a complete assembly meeting University of Southern California and ADH standards and approval or the latest version thereof consisting of two (2) internally loaded, independently operating check valves between two (2) tightly closing resilient-seated shutoff valves, with four (4) properly placed resilient seated test cocks.

24.6.2 Reduced-pressure principle backflow-prevention assembly (RP): a complete assembly meeting University of Southern California and ADH standards and approval or the latest version thereof consisting of a mechanical, independently operating, hydraulically dependent relief valve located between two (2) independently operating, internally loaded check valves that are located between two (2) tightly closing resilient seated shutoff valves with four (4) properly placed resilient-seated test cocks.

24.7 **Flow/Pressure Loss Table**

24.7.1 **DCVA's and RP's are to be sized according to the following table:**

Maximum Flow Rate - gpm	Minimum DCA/RPBP Size - inches	Maximum DCA Pressure Loss – psi	Maximum RPBP Pressure Loss - psi
50	1	10	18
75	1 ¼	10	18
100	1 ½	10	16
160	2	10	16
225	2 ½	10	15
320	3	10	14
500	4	10	14
1000	6	10	14
1600	8	10	14
2300	10	10	14
3000	12	10	14

24.7.2 **NOTE: 1** The sprinkler flow and pressure on which the calculation is based is to be the minimum required by NFPA as defined in the latest regulation of the Arkansas Fire Protection Licensing Board. Documentation to the ADH is to include a listing of that minimum flow and pressure, a headloss summary, the desired and calculated sprinkler head output, and a summary of the options examined to reduce headloss. As required per **Section 24.3.9**

SECTION 25 CONSUMER RESPONSIBILITIES

25.1 GENERAL

The consumer shall:

25.1.1 Eliminate all cross connections or install an approved backflow prevention assembly on the water service line.

25.1.2 Immediately correct any malfunction of the backflow prevention assembly.

25.1.3 Inform the APPROVING AUTHORITY of any proposed or modified cross connections and of any existing cross connections of which the consumer is aware.

25.1.4 Prior to start of construction have plans approved and permit obtained for any domestic plumbing or fire service installation requiring an approved backflow prevention assembly. Failure, refusal, or inability on the part of the customer to install, maintain, and have tested, any backflow prevention assembly on the consumer's property shall constitute grounds for discontinuing water service until such requirements have been satisfactorily met.

25.1.5 Have the type of backflow prevention assembly and manner of installation approved by the APPROVING AUTHORITY.

25.1.6 Install a backflow prevention assembly if a private water source is operational even if it is not cross-connected to the Water System.

25.1.7 Install two (2) backflow prevention assemblies in parallel if uninterrupted water service is desired during testing or repair.

25.1.8 Not install a by-pass around any backflow prevention assembly unless there is a backflow prevention assembly of the same type in the bypass.

25.1.9 Have a certified operational test within ten (10) days of installation and at intervals not to exceed one year thereafter. In those instances where the APPROVING AUTHORITY deems the degree of hazard to be great, an operational test may be required at more frequent intervals.

25.1.10 Have only personnel authorized by the ADH perform repairs, installation, maintenance and testing of domestic backflow prevention assemblies.

25.1.11 Have only personnel authorized by the ADH perform repairs, maintenance, and testing of designated fire protection service line backflow prevention assemblies.

25.1.12 Make repairs immediately upon notification by the tester that repairs are needed. Overhaul shall be performed at intervals not to exceed five (5) years.

SECTION 26 ASSEMBLY SPECIFICATIONS

26.1 GENERAL

26.1.1 Specifications for backflow prevention assemblies are essential, since no two assemblies are always reliable under every condition.

26.2 **BACKFLOW PREVENTION ASSEMBLIES**

26.2.1 **NOTE: Only those assemblies that are approved by the DEPARTMENT shall be used for backflow prevention in water service lines:**

26.2.2 Approved Assembly: Assemblies that have been tested and approved by the FCCCHR and certified by the ADH are approved by the DEPARTMENT.

26.2.3 Double check valve assembly (DCVA): a complete assembly meeting FCCCHR and the ADH standards and approval or the latest version thereof consisting of two (2) internally loaded, independently operating check valves between two (2) tightly closing resilient-seated shutoff valves, with four (4) properly placed resilient seated test cocks.

26.2.4 Reduced-pressure principle backflow-prevention assembly (RP): a complete assembly meeting FCCCHR and the ADH standards and approval or the latest version thereof consisting of a mechanical, independently operating, hydraulically dependent relief valve located between two (2) independently operating, internally loaded check valves that are located between two (2) tightly closing resilient seated shutoff valves with four (4) properly placed resilient-seated test cocks.

26.2.5 The following information shall be distinctly marked on every RPZA, DCVA, DDCVA and DRPZA by cast in the metal, stamped in the metal, or stamped on a brass or stainless steel nameplate permanently affixed to the assembly:

(a) Name or trademark
(b) Type (RPZA, DCVA, etc.)
(c) Size
(d) Model number
(e) Direction of flow (indicated by an arrow)
(f) Serial number
(g) Maximum working water pressure
(h) Maximum water temperature for which designed (designate degree F or degree C).

26.2.6 Every RPZA, DCVA, DDCVA and DRPZA shall be shipped completely assembled.

26.2.7 All frost free bury hydrants shall have the minimum of a hose bib atmospheric vacuum breaker with set screw installed prior to meter being installed. A hose bib freeze proof atmospheric vacuum breaker with set screw is also *recommended* for the customers protection. All parts must be American Made.

26.2.8 HOSE BIB ASTMOSPHERIC VACUUM BREAKER with set screw

26.2.9 HOSE BIB FREEZE PROOF ATMOSPHERIC VACUUM BREAKER with set screw

SECTION 27 ASSEMBLY INSTALLATION, RECORDS AND REPORTS

27.1 GENERAL

27.1.1 Proper installation of backflow prevention assemblies is necessary to adequately protect the Water System from backflow.

27.2 AUTHORIZED INSTALLERS & TESTERS

27.2.1 Installation of backflow prevention assemblies on domestic water service lines shall be provided by personnel licensed or certified by the ADH.

27.2.2 Installation of backflow prevention assemblies on fire protection services shall be provided by personnel licensed or certified by the Arkansas Fire Protection Licensing Board.

27.2.3 Testing of backflow prevention assemblies on domestic and fire protection services shall be provided by personnel licensed or certified by the ADH.

27.3 PERMITS

27.3.1 Consumers shall possess a permit from the APPROVING AUTHORITY prior to beginning installation of an assembly. All permits shall be obtained by Licensed Plumber installing the device.

27.3.2 A permit authorizes the use of the backflow prevention assembly and is necessary for continuing water service. Permits are non-transferable and may be revoked if the consumer fails to adhere to the conditions of the permit. Adequate records and documentation are required for continued permit usage. Consumer shall secure and hold one backflow prevention assembly "use" permit per address. Water meter shall not be set until permit is purchased and recorded at the **Bentonville Water Utilities Office** and the inspection completed.

27.4 INSTALLATION DETAIL

27.4.1 Assembly Installation

27.4.1.1 A backflow prevention assembly shall be installed in accordance with the manufacturer's instructions.

27.4.2 An assembly shall be installed on the owner's side of the water meter prior to first outlet.

27.4.3 Piping connected to the assembly shall not be used for electrical grounding.

27.4.4 Piping for risers on irrigation BFP assemblies shall be hard copper (per plumbing code) with two ground unions, one on the upstream riser and one on the downstream riser, for repair and replacement. No plastic allowed.

27.4.5 Piping connected to the assembly shall be thoroughly flushed before installing the assembly.

27.4.6 An adequate and permanent method of test water disposal shall be provided.

27.4.7 A pressure relief valve and a thermal expansion tank shall be properly installed and maintained on all water heating apparatus served by the assembly.

27.4.8 Examples of approved enclosures:

With Regulator

Standard

27.4.8.1 **IMPORTANT! Thermal Expansion Notice**-

Water expands as it heats up and is ordinarily not a problem in an open water system. However, the installation of a backflow preventer into the water system creates a closed system. This can create a potentially dangerous and/or costly situation in the water system if a provision is not allowed for the safe expansion of the heated water.

27.4.8.2 The installation of Thermal Expansion Tanks or other approved methods or devices are recommended in domestic water systems requiring backflow prevention assemblies.

27.4.8.3 Please refer to current Arkansas State Plumbing Codes or call the Bentonville Water Utilities office at 271-3140 if you have any questions.

27.4.9 The assembly installation shall be protected from vandalism and freezing. Heating and electrical wiring shall meet ASSE 1060 Standards.

27.4.10 Backflow prevention assemblies installed outdoors and subject to freezing shall be protected by an 'enclosure' which complies with the standards and specifications set forth by the American Society of Sanitary Engineering (ASSE), Code 1060.

27.4.11 Adequate support, excluding water lines, shall be provided for assemblies that are 3" or larger.

27.4.12 If not part of the approved assembly, an approved strainer shall be installed on the inlet side of the assembly prior to the assembly isolation valve, so that all water must pass through the strainer immediately before entering the assembly.

27.4.12.1 ***NOTE:*** On backflow prevention assemblies 2" and smaller, utilizing outdoor enclosures, width of enclosure and location of Y-strainer must be taken into account to allow for proper fit of enclosure. Strainers are not required on Fire Protection Systems.

27.4.13 An approved blow-off shall be installed in the water line immediately after the assembly, to allow for flushing the assembly and to allow for usage of water that is not charged a sewer fee.

27.4.13.1 ***NOTE:*** On backflow prevention assemblies 2" and smaller utilizing outdoor enclosures, the Blow-off shall be installed on the downstream riser, keeping width of assembly to a minimum to allow for proper fit of enclosure. 2" through 10" assemblies shall have a blow-off not less than 2" in diameter. Assemblies larger than 10" shall have a minimum 4" blow-off. Blow-offs installed in vaults shall have piping into the existing vault drain to prevent splashing.

27.4.14 Blow-offs in vaults may also be routed above grade and away from the vault, however, a self draining feature must be incorporated to prevent freezing damage to the blow-off piping.

27.4.15 If the assembly cannot be installed in the prescribed manner for any reason, the proposed deviations shall be submitted to the DEPARTMENT for review and approval before installation.

27.4.16 No backflow preventer assembly shall be installed above or inside a ceiling or over head in any manner, between a ceiling and sub floor or within a wall structure (between wall boards), without the express authorization of the Cross-Connection Control Program manager/agent.

27.5 **RPZA & DRPZA INSTALLATION**

27.5.1 The assembly shall not be buried or shall not be installed in a vertical position unless the assembly is approved for use in that position by the FCCCHR.

27.5.2 The assembly may be contained in an approved enclosure. If a shelter is desirable, plans will be reviewed on a case by case basis.

27.5.3 An adequate and permanent method of handling relief vent discharge and test water discharge shall be provided.

27.5.4 Clear unobstructed space for the relief vent shall be provided to prevent the vent from becoming blocked or flooded.

27.5.5 This discharge and drainage method shall meet all applicable codes and regulations per the ADH and the Bentonville Cross-Connection Control Program.

27.6 **DDCVA & DCVA INSTALLATION**

27.6.1 The assembly shall not be installed below grade, unless the following criteria can be met and accepted by the APPROVING AUTHORITY:

(a) The vault and its installation shall be approved by the DEPARTMENT before the start of construction.
(b) The vault shall not be subject to flooding.
(c) The walls of the vault shall extend above the finished grade a minimum of 3" to prevent intrusion of water or dirt.
(d) The vault shall be water-tight to prevent intrusion of water or dirt.
(e) The vault shall drain to daylight through an adequate and permanent gravity drain with a slope of at least 1%. Installation plans shall show the elevation of the vault floor and the area the water will drain to. Plans shall show drainage pipe depth and location. Drainage pipe size shall be 2" larger than the blow-off. Protection on the drainage outlet shall be provided to prevent undesirable creatures from entering.
(f) The vault cover shall be removable to allow full access to the vault. A minimum of two lifting points shall be provided.
(g) An access door will be installed in the vault cover on the testable side of the assembly. Approved doors shall be similar or equal to Bilco or Halladay and shall be a minimum of 24" x 24".
(h) Directly below the access door, steps shall be provided in the vault wall similar or equal to ICM Plastic Manhole Steps. Steps are ½" steel reinforced rod encapsulated in special polypropylene plastic.
(i) Minimum installation clearance dimensions shall be 30" between the assembly and corresponding wall and 12" on the opposite side, 8" on each end, 6" above the highest point and 12" under the assembly. Top of assembly shall not exceed 72" above finished grade.
(j) Manufactured enclosures shall be equal to or the equivalent of a "Hot Box". Enclosures shall be placed on a wire reinforced concrete pad a minimum of 4" thick and shall be removable.

27.7 **TEMPORARY USE ASSEMBLIES**

27.7.1 A public fire hydrant used as a temporary water source shall be protected by a check valve or air gap and metered by a flow meter which shall be obtained from and installed by the APPROVING AUTHORITY. **Refer to current fire hydrant meter contract**.

27.8 **REPORTING REQUIREMENTS**

27.8.1 The consumer shall be responsible for properly filing reports with the APPROVING AUTHORITY for each required backflow prevention assembly. DDCVA's and DRPZA's are composed of two (2) unique assemblies, each requiring report submission. In addition to the administrative reports, any failure, removal, modification or replacement of an assembly or suspected backflow shall be reported immediately to the APPROVING AUTHORITY. Performance tests, replacement, repair and maintenance reports shall be filed within 14 calendar days.

27.9 **RECORDS**

27.9.1 The consumer shall keep records for each assembly. Installation drawings, installer, test reports, manufacturer, model, serial number, date installed, copy of current permit, schedule of preventive

maintenance, test reports and technical data are the minimum record requirements. These records shall be maintained for a period not less than five years.

27.10 **PROTECTION OF ASSEMBLIES**

27.10.1 No person shall maliciously, willfully, or negligently break, damage, destroy, deface or tamper with any structure, appurtenance or equipment which is a part of the backflow prevention assembly.

27.10.2 No person shall cover a backflow prevention assembly vault with earth or pavement, or otherwise render it inaccessible.

27.11 **PENALTIES**

27.11.1 The DEPARTMENT shall, within an approximate period of forty five (45) days prior to the annual test date, mail a notification letter to customers operating a backflow prevention assembly (BFP) on that customer's premises, informing them of the annual test due date of said assembly. Included in the notification letter shall be identifying information connected with the BFP assembly, i.e.; brand, model, serial number and approximate location of the BFP assembly(s). The City may also include with the notification a test form and a list of Licensed Assembly Tester Technicians that the customer may use to have the BFP assembly tested. The Licensed Assembly Tester Technician list is also available on the City of Bentonville website. The period of approximately forty five (45) days allows adequate time to secure a satisfactory test report of the BFP assembly(s) and to have a copy of the report sent to the DEPARTMENT.

27.11.2 In the event the DEPARTMENT has not received a copy of a satisfactory test report approximately fifteen (15) days prior to the due date, a second notice letter will be mailed to the customer. This letter is a reminder to the customer of the approaching due date.

27.11.3 The second notice shall also contain the same BFP assembly information.

27.11.4 If the DEPARTMENT has not received a satisfactory test result within five (5) days after the due date, the customer shall be notified by mail, hand delivery or in some cases certified mail that they are in violation of current ordinance and have 15 days to complete a satisfactory test and deliver a copy of the test report to the DEPARTMENT, or water service to this address shall be discontinued until such time a copy of said test report shall be delivered to the DEPARTMENT office.

27.11.5 Any consumer found in violation of any of the provisions of the Program, shall be served by the APPROVING AUTHORITY with written notice stating the nature of the violation, describing the penalty applicable to the violation and providing a reasonable time limit for the satisfactory correction thereof. The offender shall, within the period of time stated in such notice, permanently cease all violations. The consumer may deliver by certified mail to the APPROVING AUTHORITY, within 5 days of receipt of such notice a written request for a "just cause" meeting with the APPROVING AUTHORITY. At this meeting the consumer shall be given the opportunity to show "just cause" for the notice to be rescinded or modified.

27.11.6 Any notice issued pursuant to this sub-section may provide one or more of the following penalties:

(a) A compliance directive mandating procedures to bring the consumer into compliance with the Program within the designated time; failure to comply with the compliance directive shall result in termination of water service.
(b) A withdrawal of the Consumers backflow prevention assembly permit and termination of water service to the consumer.

27.11.7 No action to withdraw a consumer's permit shall be final until the APPROVING AUTHORITY has given notice described herein held a "just cause" meeting, if requested.

27.11.8 However, if the APPROVING AUTHORITY determines that to continue to provide water service will endanger the public health, due to possible contamination of the Water System, water service to the property shall be immediately terminated.

27.11.9 Any person violating the provisions of this Program shall become liable to the DEPARTMENT for any expense, loss or damage occurred to the DEPARTMENT by reason of such violation.

27.11.10 The listing of penalties in this Section shall not preclude other appropriate judicial remedies available to the DEPARTMENT for any violation of the Program. The DEPARTMENT may petition any Court of competent jurisdiction to grant injunctive or other legal or equitable relief by reason of a violation.

Approved by City Council 22 February 2000

Detailed Drawings

General Water/Sewer Details

GWS01	Encasement Detail
GWS02	Thrust Blocking
GWS03	Reaction Backing Table
GWS04	Anchor Collar Specifications
GWS05	Encasement Crossing
GWS06	Subdivision Utility Placement – Black/White and Color
GWS07	Typical Bedding Detail – Per Street Department Specs

Water Details

W01	1" Temporary Blow-off Assembly/Sample Point
W02	1" Water Service
W03	5/8" Water Service
W04	Fire Hydrant with Retainer Glands
W05	Fire Hydrant with Swivel Anchor Coupling
W06	Deep Bury Fire Hydrants
W07	Valve Box Valve Stem and Tracer Wire Installation
W08	Restrained Gate Valve
W09	2" Combination Air/Vacuum Valve
W10	1" Combination Air/Vacuum Valve
W11	Swing Connection - New Main to Existing Main
W12	Meter Vault 4" – 8" Meters (Typical)
W13	Cut and Cap Detail
W14	Frost Free Hose Bibb with Vacuum Breaker
W15	Reduced Pressure (RP) Backflow Device – Irrigation Only
W16	Reduced Pressure (RP) Backflow Device – Domestic Only

Sanitary Sewer Details

SS01	Sanitary Sewer Manhole - Cast-In-Place
SS02	Sanitary Sewer Manhole - Interior Drop
SS03	Sanitary Sewer Manhole - Exterior Drop
SS04	Heavy Duty Manhole Lid and Frame
SS05	Water Tight Bolted Lid and Frame
SS06	Sanitary Sewer Service Wye
SS07	Existing Manhole Abandonment – 5' or deeper
SS08	Private Sewer Manhole – Ring and Lid
SS09	Manhole Adjust to Grade

Lift Station Details

LS01	Duplex Pump Control Panel 480V 3-Phase
LS02	Duplex Pump Control Panel 230V Single Phase
LS03	Lift Station Site
LS04	Lift Station Non-Clog Pumps above 5-HP
LS05	Lift Station Grinder Pumps 5-HP and Less
LS06	Lift Station Wet Well
LS07	Lift Station Valve Vault
LS08	Air Vacuum /Release Manhole for Force Main
LS09	Typical Bedding Detail for Force Main
LS10	Tracer Wire Port

0

ENCASEMENT DETAIL

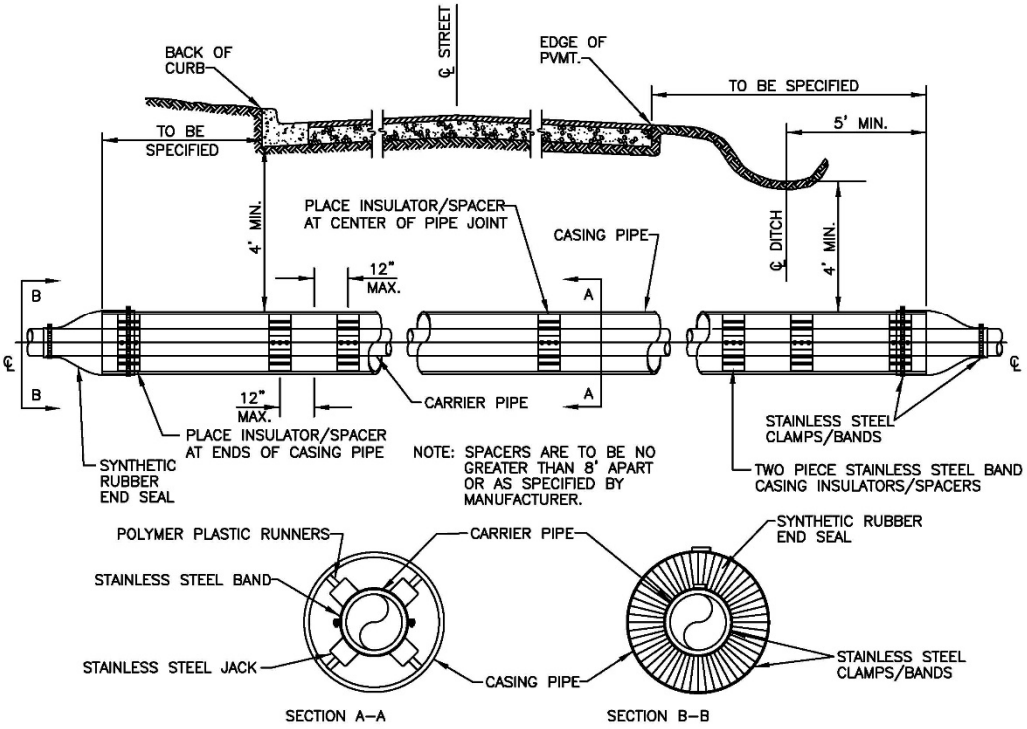

CARRIER & CASING SIZES									
CARRIER	4"	6"	8"	10"	12"	14"	16"	18"	20"
CASING	16"	16"	16"	18"	20"	24"	30"	30"	36"
CASING/WALL THICKNESS	.219	.219	.219	.250	.281	.344	.406	.406	.500

NOTE: DUCTILE IRON, OR PVC PIPE REQUIRED FOR WATER, OR SEWER.

*ALL BELLS SHALL BE RESTRAINED INSIDE ENCASEMENT BY APPROVED METHOD.

	DRAWN BY: NJ	CHECKED BY: PN
	GEN WATER/SEWER DETAIL: GWS01	
	LAST REVISION DATE: 01/27/2020	
	APPROVED: PN	01/27/2020

THRUST BLOCKING

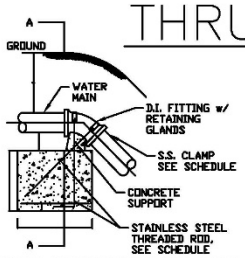

BLOCKING FOR VERTICAL TIE DOWN

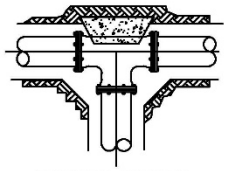

BLOCKING FOR TEE

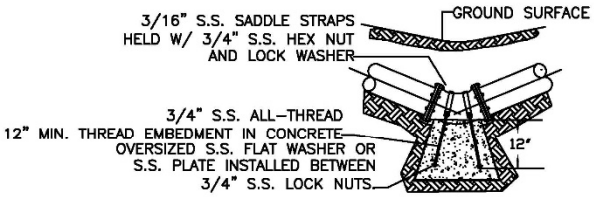

TYPICAL BLOCKING FOR VERTICAL BENDS

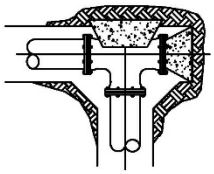

SPECIAL BLOCKING OF TEE & PLUG (WHEN DIRECTED BY WATER DEPT.)

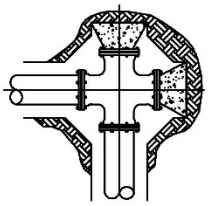

TYPICAL SECTION OF CROSS & 2 PLUG BLOCKING (WHEN DIRECTED BY WATER DEPT.)

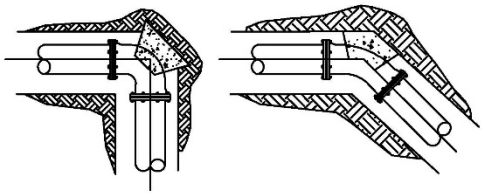

TYPICAL BLOCKING FOR HORIZONTAL BENDS

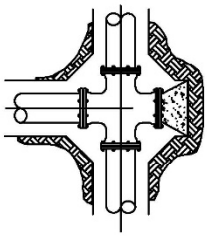

TYPICAL SECTION OF CROSS & PLUG BLOCKING (WHEN DIRECTED BY WATER DEPT.)

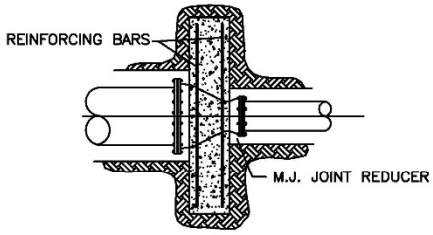

THRUST SUPPORT FOR REDUCER (SIZE TO BE DETERMINED BY WATER DEPT.)

NOTES

1. ALL BLOCKING SHALL BE AGAINST UNDISTURBED SOIL USING 4,000 PSI CONCRETE.
2. WHERE SOIL CONDITIONS MAKE IT NECESSARY TO POUR CONCRETE OVER JOINTS, THE ENDS OF THE ADJACENT PIPES MUST HAVE A THRUST BLOCK TO RESIST MOVEMENT OF THESE JOINTS.
3. WEIGHT CALCULATIONS TO BE BASED ON REACTION BACKING TABLE (SEE GWS03).
4. WHEN BLOCKING AGAINST FITTINGS, FITTINGS SHALL BE COVERED WITH POLYETHYLENE WRAP TO PREVENT BONDING OF CONCRETE
5. WHERE SHEAR BECOMES A PROBLEM PROPER REINFORCING MUST BE INSTALLED INTO THE BLOCKING.
6. CLEARANCE SHALL BE A MINIMUM OF 6" BETWEEN PIPE AND OBSTRUCTIONS.
7. CLEARANCE ON PIPES BELONGING TO OIL/GAS COMPANIES SHALL BE 18" UNLESS SPECIAL PERMISSION IS GIVEN BY THESE COMPANIES AND THE DEPARTMENT.
8. 12" OF ALL THREAD EMBEDED IN CONCRETE
9. MIN. 5/8" ALL THREAD FOR SECTIONS 10FT OR UNDER

THE CITY OF BENTONVILLE WASTEWATER WATER	DRAWN BY: NJ	CHECKED BY: PN
	GEN WATER/SEWER DETAIL: GWS02	
	LAST REVISION DATE: 01/27/2020	
	APPROVED: PN	01/27/2020

REACTION BACKING TABLE

BLOCKING SCHEDULE					
PIPE SIZE	BENDS				
		45°	22 1/2°	11 1/4°	ROD DIA.
VOLUME REQ'D (CU. FT.)		98.5	50.2	25.2	
8"	A (FT.)	5.00'	4.00'	3.00'	
	B (FT.)	4.00'	3.20'	2.80'	3/4 IN.
	C (FT.)	5.00'	4.00'	3.00'	
	MIN. CLAMP (2 EA.)	3/8 IN. x 2 IN.			
VOLUME REQ'D (CU. FT.)		209.5	106.8	53.7	
12"	A (FT.)	6.00'	5.00'	4.00'	
	B (FT.)	6.00'	4.25'	3.50'	3/4 IN.
	C (FT.)	6.00'	5.00'	4.00'	
	MIN. CLAMP (2 EA.)	1/2 IN. x 2 IN.			
VOLUME REQ'D (CU. FT.)		457.2	233.1	117.1	
18"	A (FT.)	8.00'	6.50'	5.00'	
	B (FT.)	7.25'	5.50'	4.75'	1 IN.
	C (FT.)	8.00'	6.50'	5.00'	
	MIN. CLAMP (2 EA.)	5/8 IN. x 3 IN.			
VOLUME REQ'D (CU. FT.)		800.3	408.0	205.0	
24"	A (FT.)	9.50'	7.50'	6.00'	
	B (FT.)	9.00'	7.25'	5.75'	1 1/4 IN.
	C (FT.)	9.50'	7.50'	6.00'	
	MIN. CLAMP (2 EA.)	5/8 IN. x 3 IN.			

VOLUME CALCULATED ON THE BASIS OF CONCRETE REACTING THRUST ON THE RESPECTIVE BENDS UNDER AN INTERNAL PRESSURE OF 250 PSI, 50 PSI SURGE AND THE WEIGHT OF CONCRETE IS 150 POUNDS PER CU. FT.

NOTES:

1. ALL FITTINGS SHALL BE MECHANICAL JOINTS.
2. DO NOT COVER BELLS OR FLANGES WITH CONCRETE.
3. WRAP ALL FITTINGS WITH POLY WRAP.
4. BACK ALL TEES ACCORDING TO SIZE OF BRANCH.
5. BACKING FUTURE LINE EXTENSIONS SHALL BE SUCH THAT LATER REMOVAL IS POSSIBLE.
6. ALL BENDS WHERE FITTINGS ARE USED, BOTH HORIZONTAL OR VERTICAL, SHALL BE BACKED WITH CONCRETE.
7. REACTION BACKING TABLE IS BASED ON 150 PSI AND SOIL BEARING PRESSURE OF 2,000 LB/SQ. FT. ADDITIONAL BACKING MAY BE REQUIRED IN SOME AREAS AS REQUIRED BY CITY WATER DEPARTMENT.

	DRAWN BY: NJ	CHECKED BY: PN
	GEN WATER/SEWER DETAIL: GWS03	
	LAST REVISION DATE: 01/27/2020	
	APPROVED: PN	01/27/2020

ANCHOR COLLAR SPECIFICATIONS

ANCHOR COLLAR SCHEDULE						
PIPE SIZE	DIMENSIONS				REINFORCING BARS	
	W	H	T	M	"A" BARS	"B" BARS
6"	1.5'	2.0'	1.0'	M.J. RETAINER GLAND	#6@6"	#6@6"
8"	1.5'	2.5'	1.0'	M.J. RETAINER GLAND	#6@6"	#6@6"
12"	2.0'	4.0'	1.5'	M.J. RETAINER GLAND	#6@6"	#6@6"
16"	3.0'	4.5'	1.5'	M.J. RETAINER GLAND	#6@6"	#6@6"
20"	3.0'	5.0'	2.0'	M.J. RETAINER GLAND	#6@6"	#6@6"
24"	3.5'	5.5'	2.0'	M.J. RETAINER GLAND	#7@6"	#6@10"
30"	6.5'	6.0'	2.5'	4"	#8@6"	#7@10"
36"	7.0'	7.0'	2.5'	4"	#8@6"	#7@10"

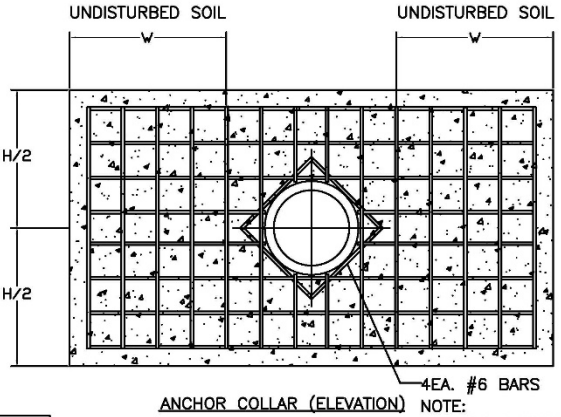

ANCHOR COLLAR (ELEVATION)

ROD REQUIREMENTS	
MAIN SIZE	NO. OF RODS
6"	2
8"	4
12"	4
16"	6
24"	6
30"	8
36"	8

NOTE:
USE M.J. RETAINER GLANDS FOR PIPE 24" AND SMALLER.

NOTE:
PIPE SURFACES SHALL BE CLEANED OF ALL FOREIGN MATERIAL BEFORE 4000 PSI CONCRETE COLLAR IS POURED.

NOTE:
ON DEAD END LINE, PIPE MUST EXTEND AT LEAST 12" FROM THE OUTSIDE EDGE OF ANCHOR COLLAR.

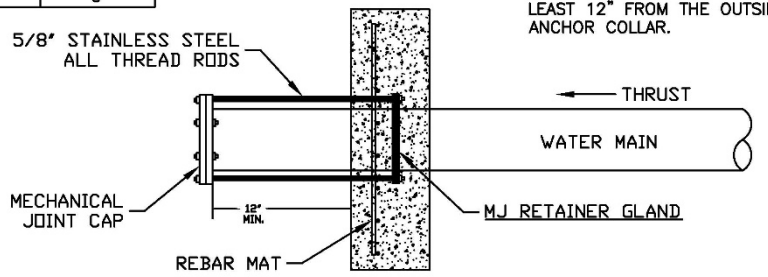

ANCHOR COLLAR (SIDE)

NOTE:
ALL-THREAD STEEL RODS SHALL BE 5/8" STAINLESS STEEL WITH STAINLESS STEEL HARDWARE.

DRAWN BY: NJ	CHECKED BY: PN
GEN WATER/SEWER DETAIL: GWS04	
LAST REVISION DATE: 01/27/2020	
APPROVED: PN	01/27/2020

ENCASEMENT CROSSING DETAIL

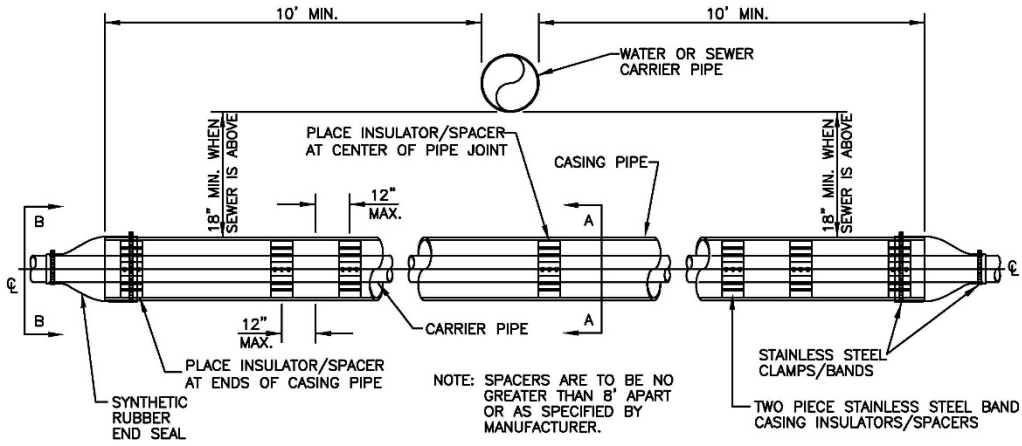

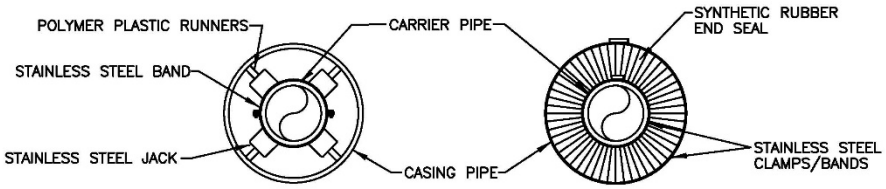

SECTION A–A SECTION B–B

CARRIER & CASING SIZES									
CARRIER	4"	6"	8"	10"	12"	14"	16"	18"	20"
CASING	16"	16"	16"	18"	20"	24"	30"	30"	36"
CASING/WALL THICKNESS	.219	.219	.219	.250	.281	.344	.406	.406	.500

NOTE: DUCTILE IRON, OR PVC PIPE REQUIRED FOR WATER, OR SEWER.

*ALL BELLS SHALL BE RESTRAINED BY APPROVED METHOD.

	DRAWN BY: NJ	CHECKED BY: PN
	GEN WATER/SEWER DETAIL: GWS05	
	LAST REVISION DATE: 01/27/2020	
	APPROVED: PN	01/27/2020

SUBDIVISION UTILITY PLACEMENT

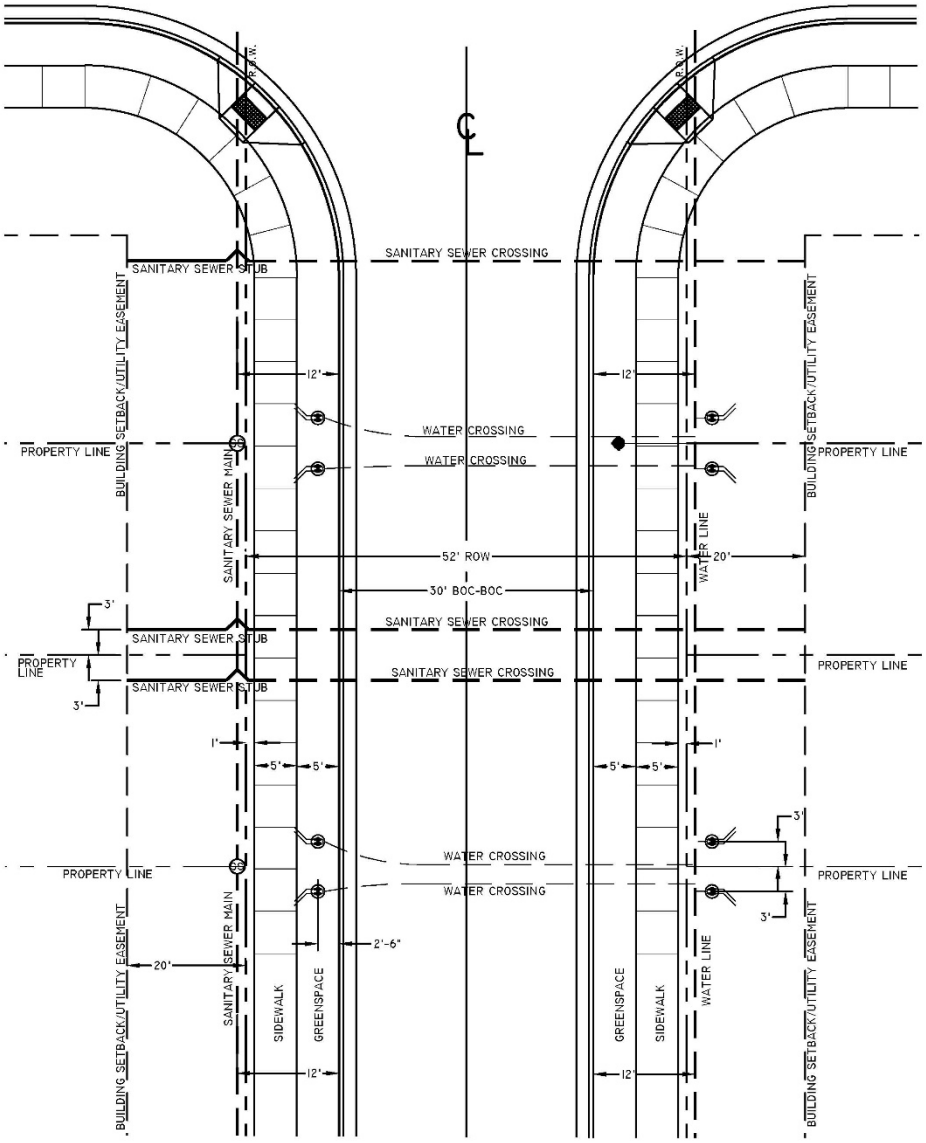

UTILITY SEPARATIONS:

10' HORZ. BETWEEN WATER & SEWER
18" VERT. BETWEEN WATER & SEWER
5' HORZ. BETWEEN ELECTRIC & WATER OR SEWER(MAINS)
18" MIN. VERT. BETWEEN ELEC. & WATER OR SEWER
12" MIN. HORZ. BETWEEN ELEC. & FRANCHISE UTIL.
12" MIN. VERT. BETWEEN SECONDARY CONDUIT AND WATER & SEWER

DRAWN BY: NJ	CHECKED BY: PN
GEN WATER/SEWER DETAIL: GWS06	
LAST REVISION DATE: 01/27/2020	
APPROVED: PN	01/27/2020

TYPICAL BEDDING DETAIL

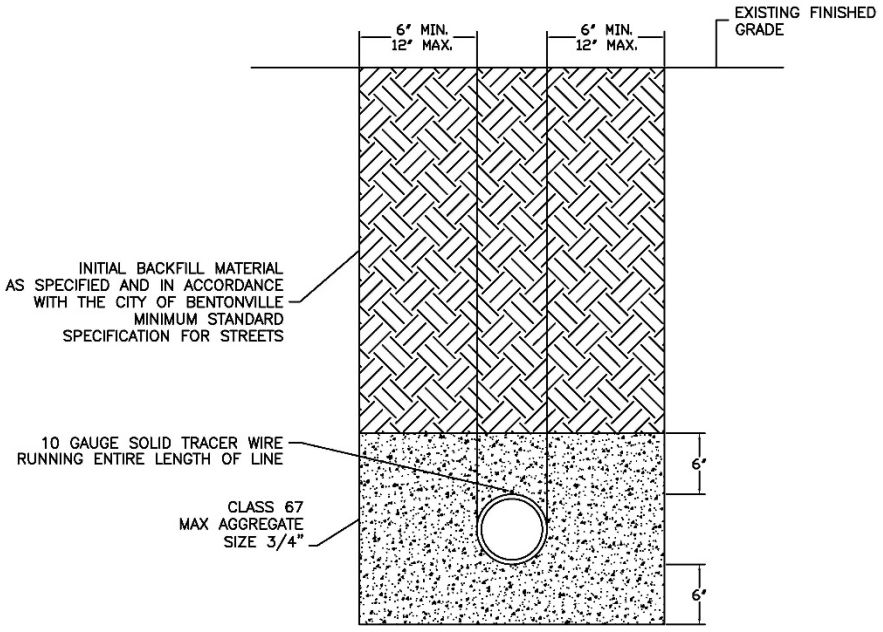

* REFER TO STREET SPECIFICATIONS FOR STREET REPAIR INFORMATION

	DRAWN BY: NJ	CHECKED BY: PN
	GEN WATER/SEWER DETAIL: GWS07	
	LAST REVISION DATE: 01/27/2020	
	APPROVED: PN	01/27/2020

LIFT STATION DETAIL

GRINDER PUMPS 5 HP AND LESS

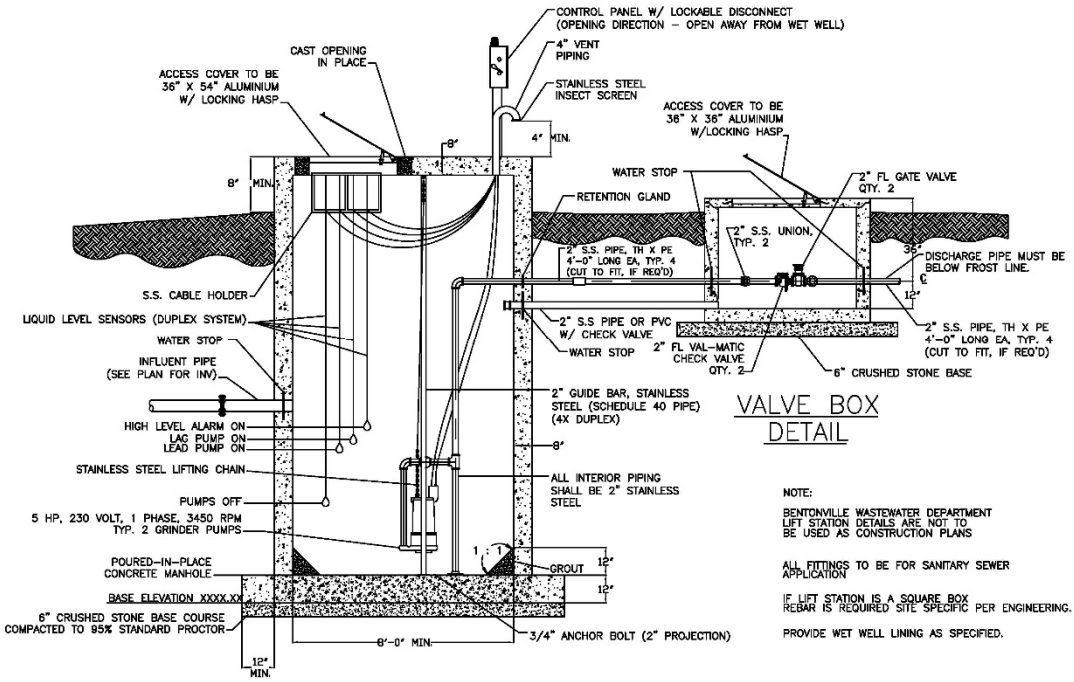

VALVE BOX DETAIL

NOTE:

BENTONVILLE WASTEWATER DEPARTMENT LIFT STATION DETAILS ARE NOT TO BE USED AS CONSTRUCTION PLANS

ALL FITTINGS TO BE FOR SANITARY SEWER APPLICATION

IF LIFT STATION IS A SQUARE BOX REBAR IS REQUIRED SITE SPECIFIC PER ENGINEERING.

PROVIDE WET WELL LINING AS SPECIFIED.

DRAWN BY: NJ	CHECKED BY: PN
LIFT STATION DETAIL: LS05	
LAST REVISION DATE: 01/27/2020	
APPROVED: PN	01/27/2020

WET WELL

TOP SLAB REINFORCEMENT DETAIL

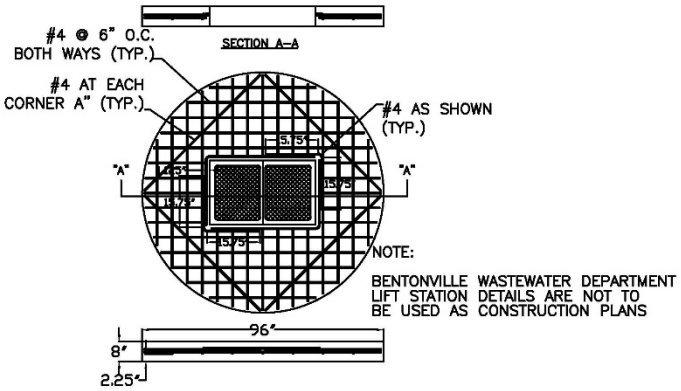

BOTTOM SLAB REINFORCEMENT DETAIL

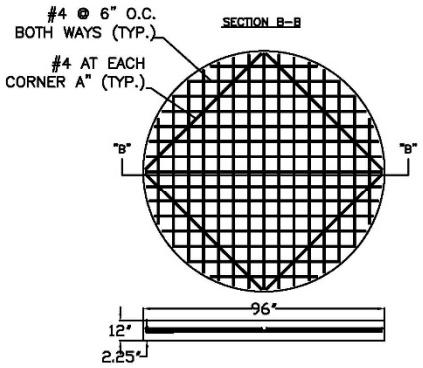

	DRAWN BY: NJ	CHECKED BY: PN
	LIFT STATION DETAIL: LS06	
	LAST REVISION DATE: 01/27/2020	
	APPROVED: PN	01/27/2020

LIFT STATION VALVE VAULT DETAIL

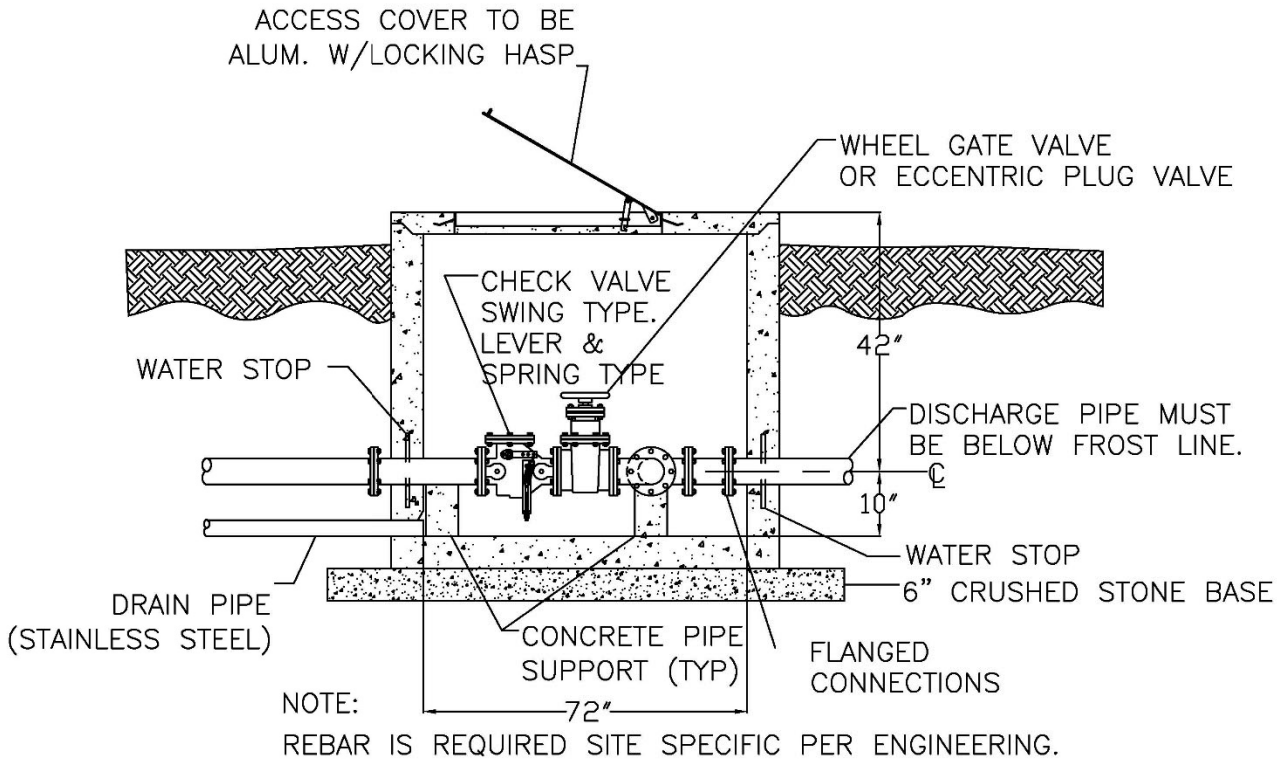

NOTE:
REBAR IS REQUIRED SITE SPECIFIC PER ENGINEERING.

DRAWN BY: NJ	CHECKED BY: PN
LIFT STATION DETAIL: LS07	
LAST REVISION DATE: 01/27/2020	
APPROVED: PN	01/27/2020

AIR VACUUM/RELEASE MANHOLE FOR FORCE MAIN

NOT TO SCALE

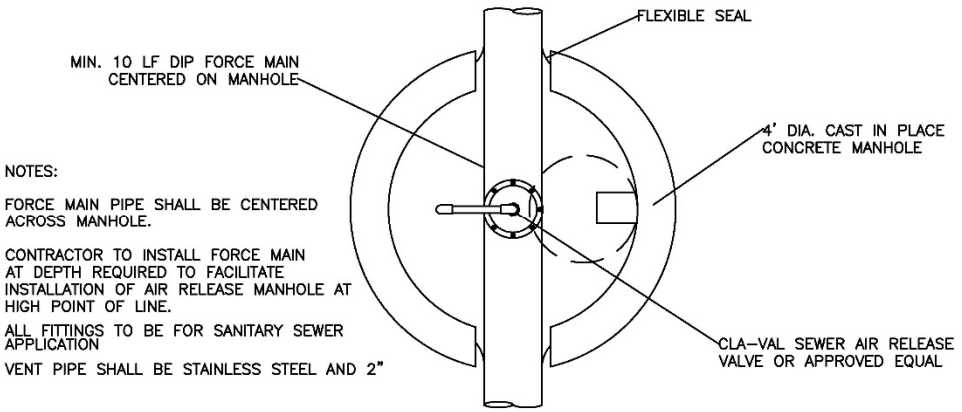

PLAN

NOTES:

FORCE MAIN PIPE SHALL BE CENTERED ACROSS MANHOLE.

CONTRACTOR TO INSTALL FORCE MAIN AT DEPTH REQUIRED TO FACILITATE INSTALLATION OF AIR RELEASE MANHOLE AT HIGH POINT OF LINE.

ALL FITTINGS TO BE FOR SANITARY SEWER APPLICATION

VENT PIPE SHALL BE STAINLESS STEEL AND 2"

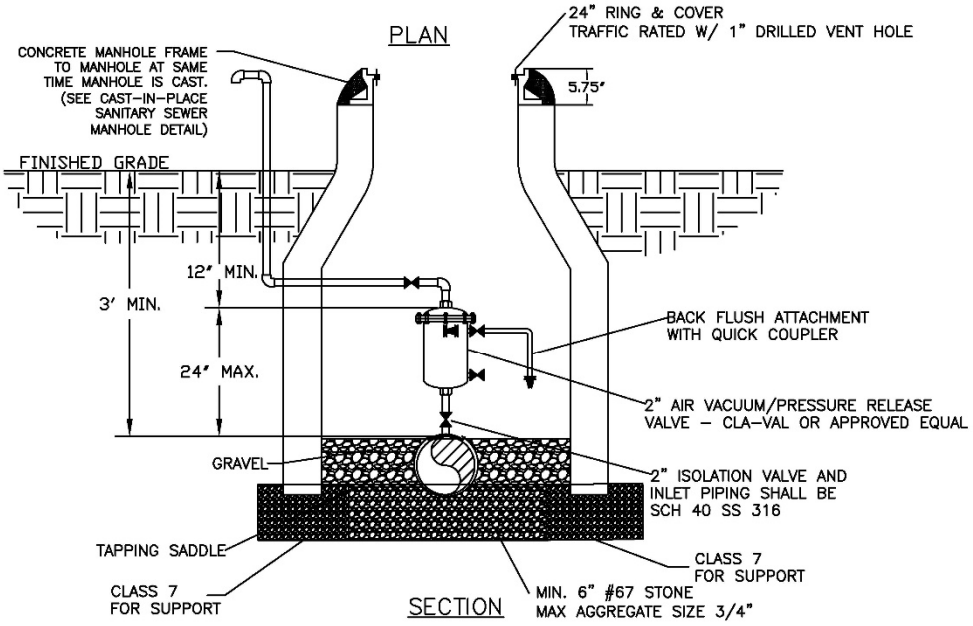

SECTION

DRAWN BY: NJ	CHECKED BY: PN
LIFT STATION DETAIL: LS08	
LAST REVISION DATE: 01/27/2020	
APPROVED: PN	01/27/2020

TYPICAL BEDDING DETAIL
FOR FORCE MAIN

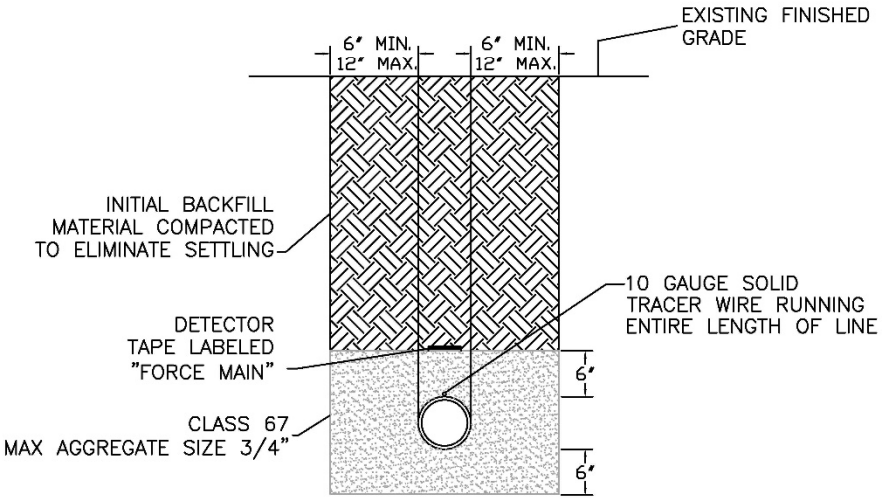

DRAWN BY: NJ	CHECKED BY: PN
LIFT STATION DETAIL: LS09	
LAST REVISION DATE: 01/27/2020	
APPROVED: PN	01/27/2020

TRACER WIRE PORT

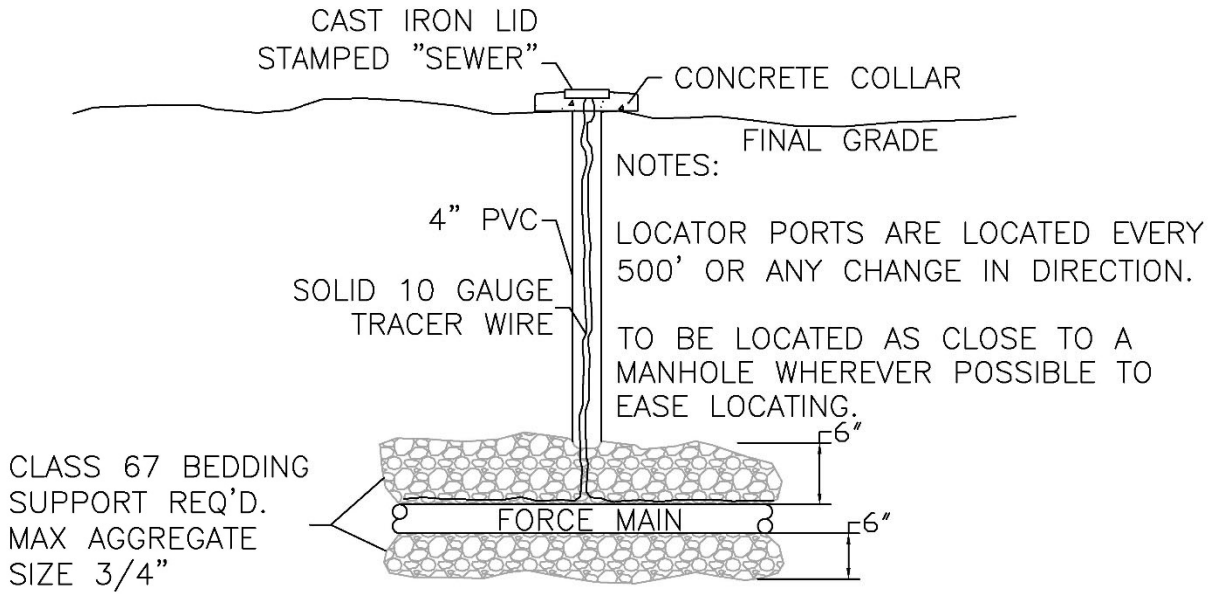

THE CITY OF WASTEWATER WATER BENTONVILLE	DRAWN BY: NJ	CHECKED BY: PN
	LIFT STATION DETAIL: LS10	
	LAST REVISION DATE: 01/27/2020	
	APPROVED: PN	01/27/2020

DUPLEX PUMP CONTROL PANEL

480 V / 3 PHASE

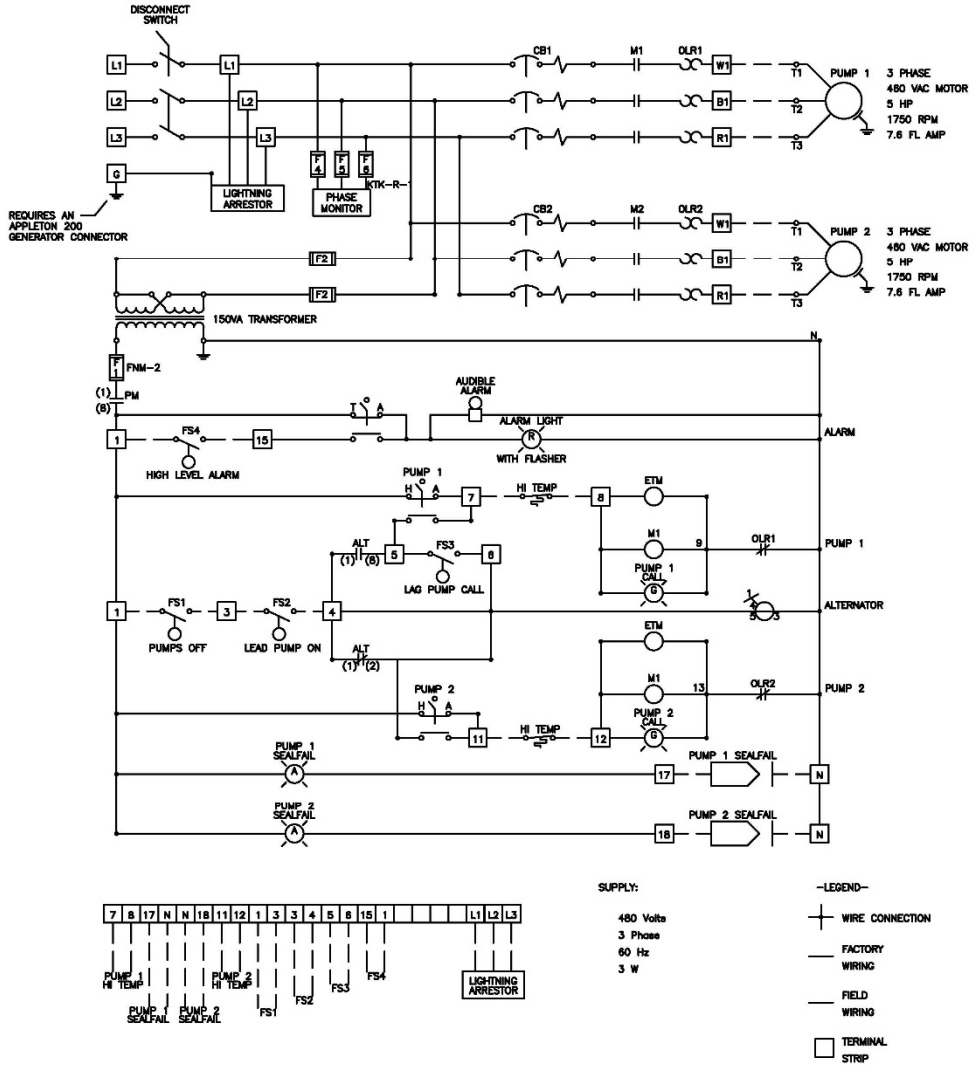

DRAWN BY: NJ	CHECKED BY: PN
LIFT STATION DETAIL: LS01	
LAST REVISION DATE: 01/27/2020	
APPROVED: PN	01/27/2020

DUPLEX PUMP CONTROL PANEL

230 V / SINGLE PHASE

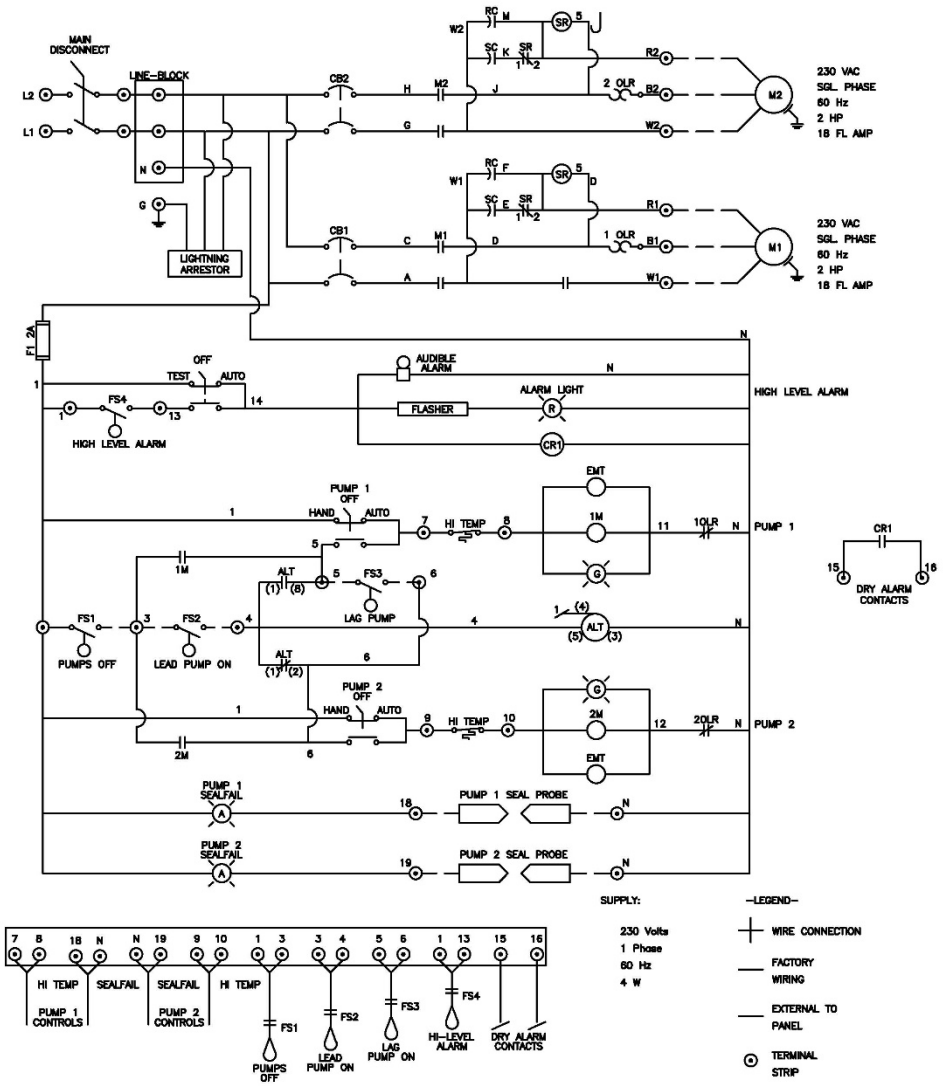

DRAWN BY: NJ	CHECKED BY: PN
LIFT STATION DETAIL: LS02	
LAST REVISION DATE: 01/27/2020	
APPROVED: PN	01/27/2020

LIFT STATION SITE DETAIL

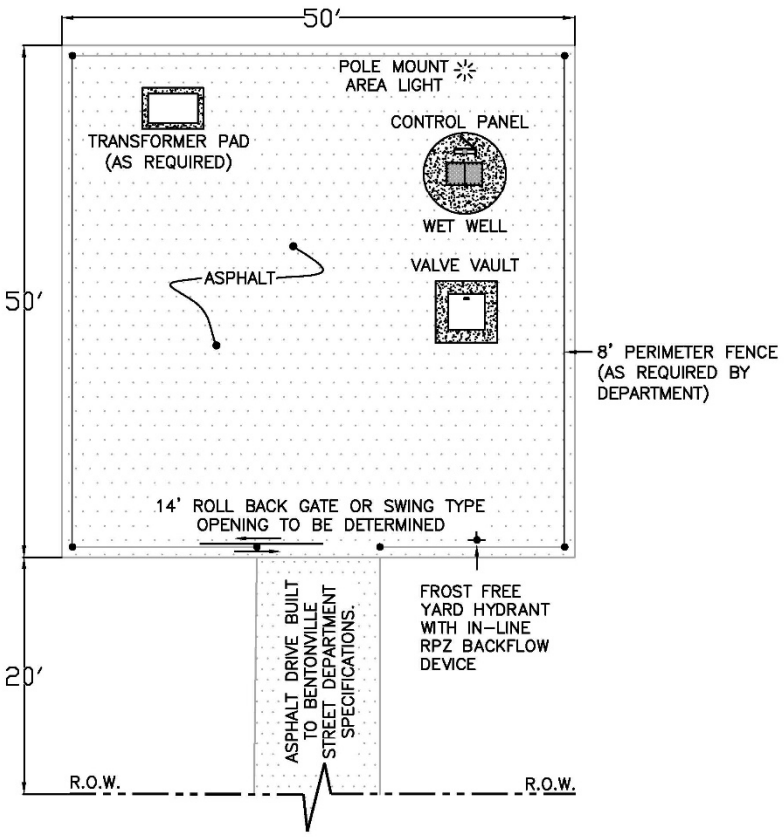

*ACTUAL SITE LAYOUT MAY VARY

BENTONVILLE WASTEWATER DEPARTMENT
LIFT STATION DETAILS ARE NOT TO
BE USED AS CONSTRUCTION PLANS

	DRAWN BY: NJ	CHECKED BY: PN
	LIFT STATION DETAIL: LS03	
	LAST REVISION DATE: 01/27/2020	
	APPROVED: PN	01/27/2020

LIFT STATION DETAIL

NON-CLOG PUMPS ABOVE 5 HP

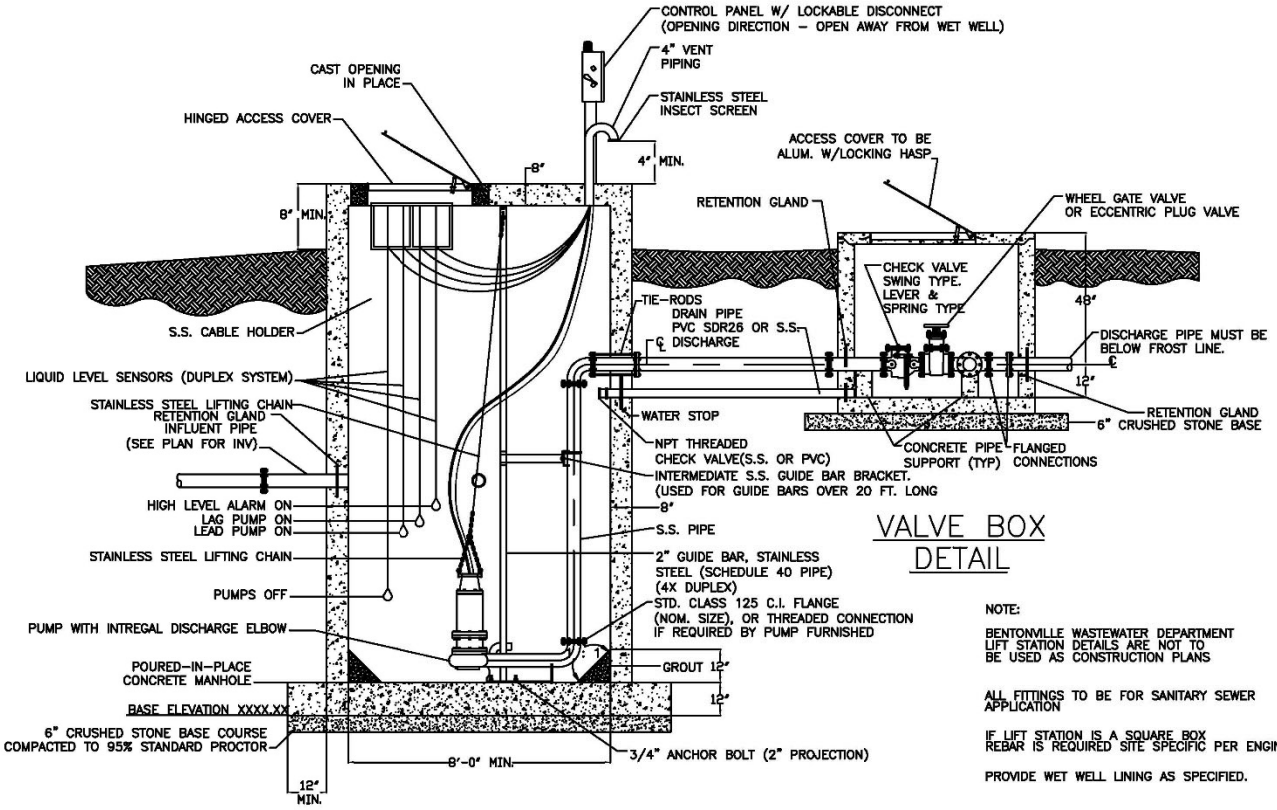

VALVE BOX DETAIL

NOTE:

BENTONVILLE WASTEWATER DEPARTMENT LIFT STATION DETAILS ARE NOT TO BE USED AS CONSTRUCTION PLANS

ALL FITTINGS TO BE FOR SANITARY SEWER APPLICATION

IF LIFT STATION IS A SQUARE BOX REBAR IS REQUIRED SITE SPECIFIC PER ENGINEERING.

PROVIDE WET WELL LINING AS SPECIFIED.

THE CITY OF WASTEWATER BENTONVILLE	DRAWN BY: NJ	CHECKED BY: PN
	LIFT STATION DETAIL: LS04	
	LAST REVISION DATE: 01/27/2020	
	APPROVED: PN	01/27/2020

WATER TIGHT BOLTED MANHOLE LID & FRAME

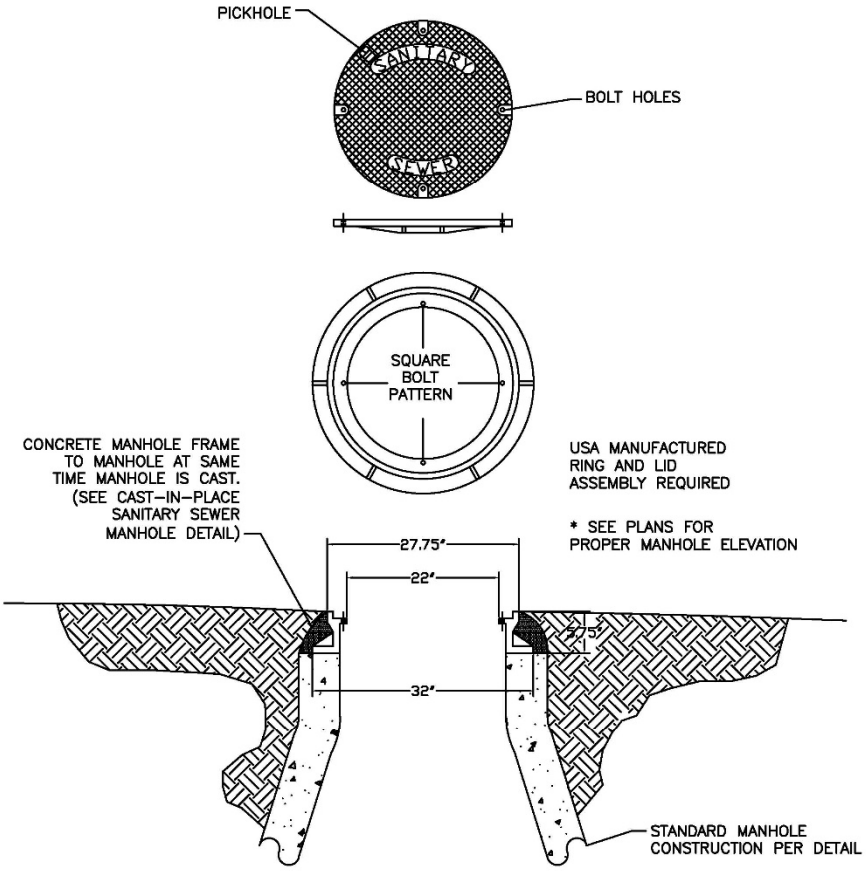

DRAWN BY: NJ	CHECKED BY: PN
SANITARY SEWER DETAIL: SS05	
LAST REVISION DATE: 01/27/2020	
APPROVED: PN	01/27/2020

SANITARY SEWER
SERVICE WYE

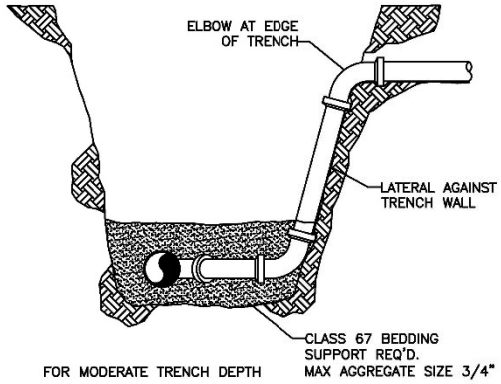

FOR MODERATE TRENCH DEPTH

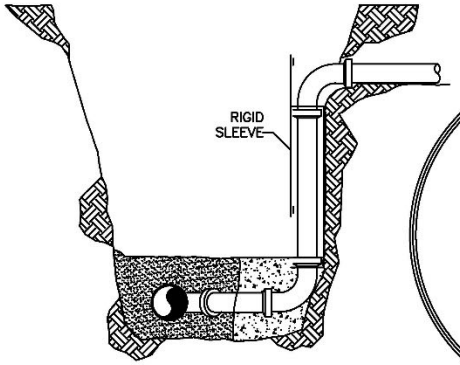

RIGID SLEEVE FOR ANY TRENCH
(CONCRETE MUST SUPPORT SLEEVE)

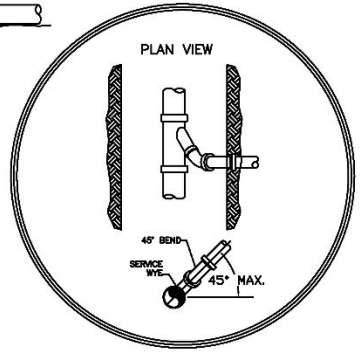

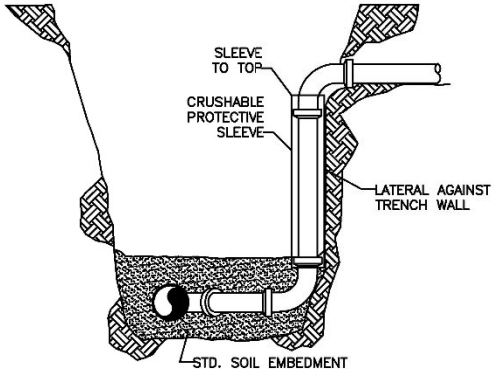

CRUSHABLE SLEEVE – ANY DEPTH
(SLEEVE OF NEAR ZERO COLUMN STRENGTH)

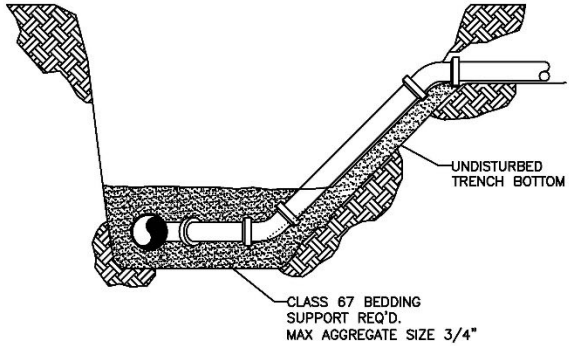

SLOPING LATERAL TRENCH – ANY DEPTH
(SLOPE AT 1:1 OR FLATTER)

DRAWN BY: NJ	CHECKED BY: PN
SANITARY SEWER DETAIL: SS06	
LAST REVISION DATE: 01/27/2020	
APPROVED: PN	01/27/2020

EXISTING MANHOLE ABANDONMENT DETAIL 5 FT OR DEEPER

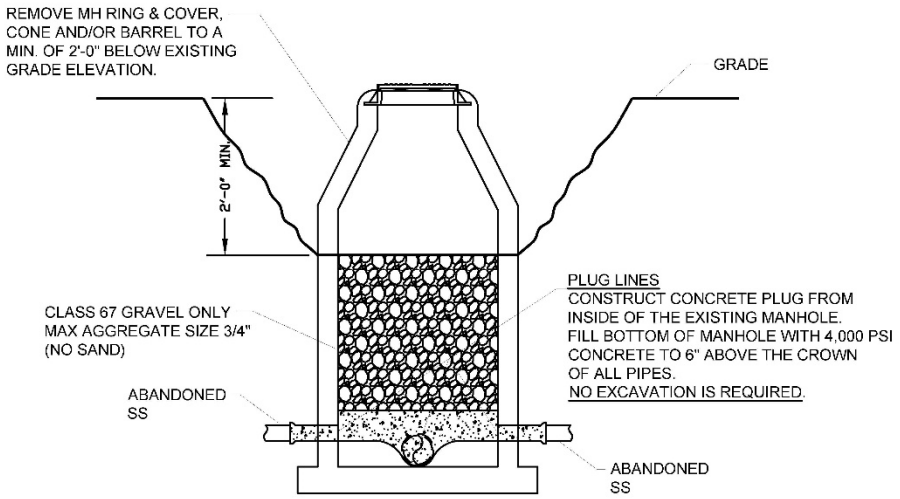

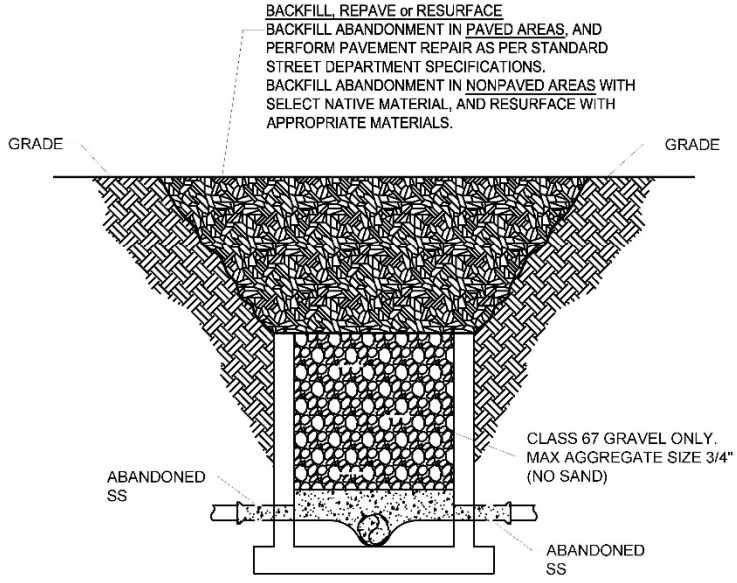

DRAWN BY: NJ	CHECKED BY: PN
SANITARY SEWER DETAIL: SS07	
LAST REVISION DATE: 01/27/2020	
APPROVED: PN	01/27/2020

PRIVATE MANHOLE
RING AND LID

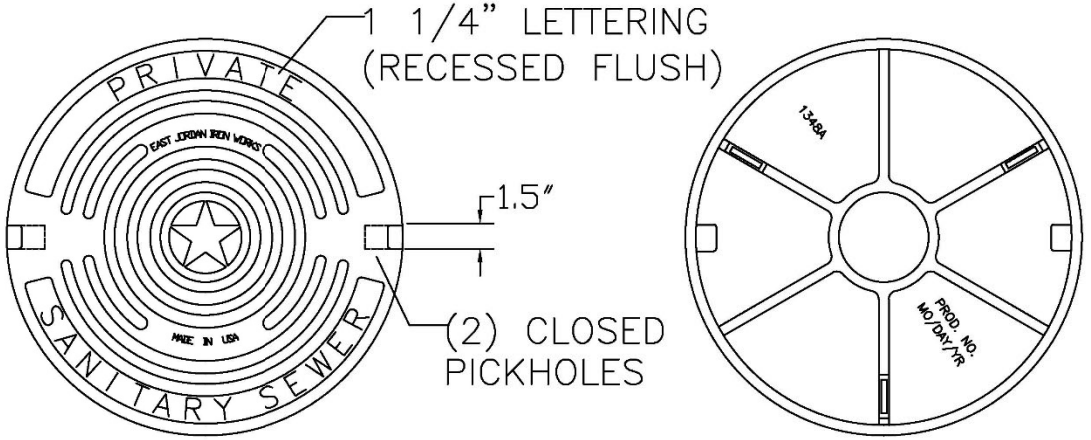

BOTTOM VIEW

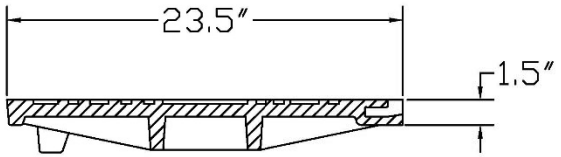

COVER SECTION

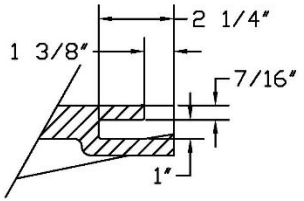

PICKHOLE DETAIL

DRAWN BY: NJ	CHECKED BY: PN	
SANITARY SEWER DETAIL: SS08		
LAST REVISION DATE: 01/27/2020		
APPROVED: PN	01/27/2020	

TYPICAL MANHOLE
ADJUST TO GRADE DETAIL

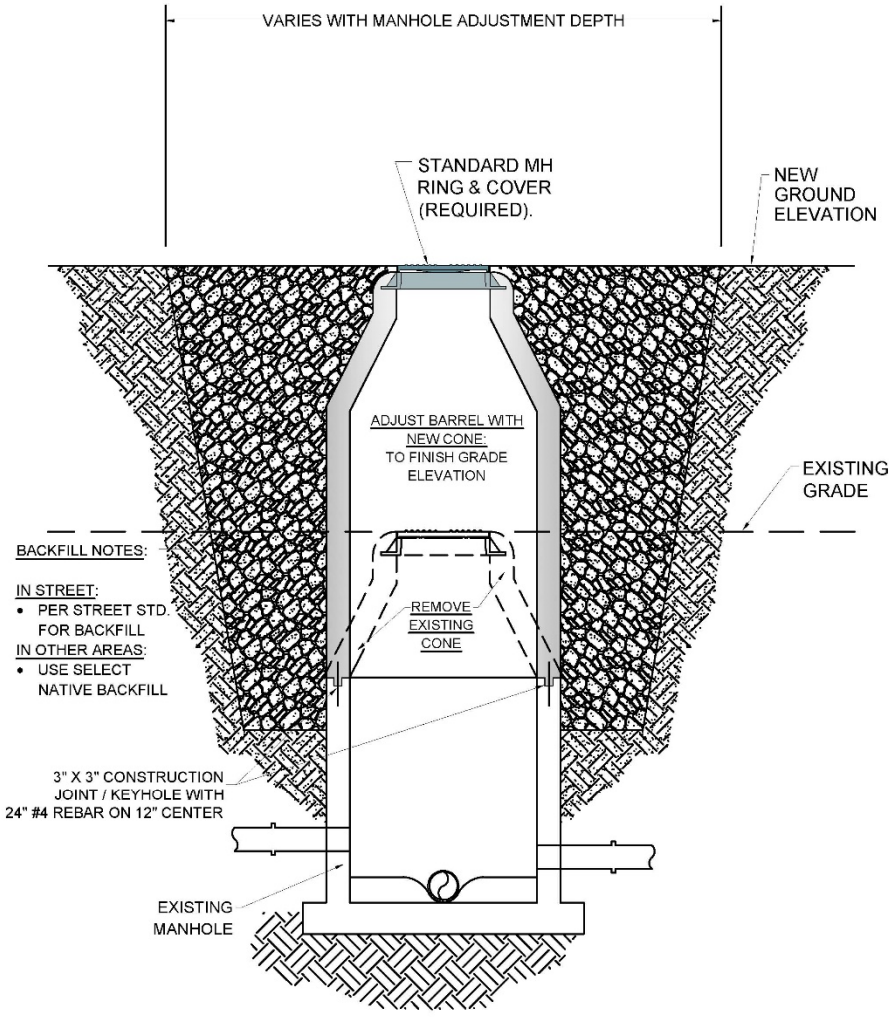

DRAWN BY: NJ	CHECKED BY: PN
SANITARY SEWER DETAIL: SS09	
LAST REVISION DATE: 01/27/2020	
APPROVED: PN	01/27/2020

SANITARY SEWER
CAST IN PLACE MANHOLE

4,000 PSI CONCRETE

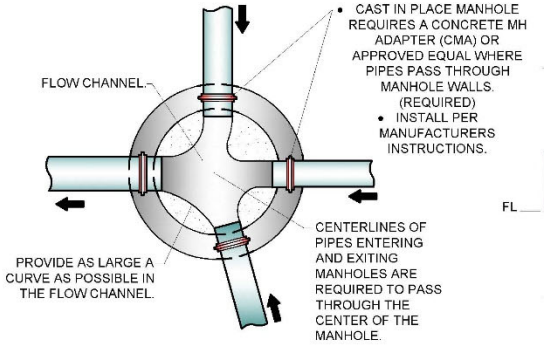

MANHOLE FLOW CHANNEL

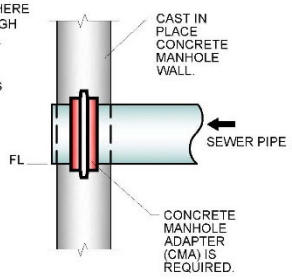

CONCRETE MANHOLE ADAPTER (CMA) DETAIL

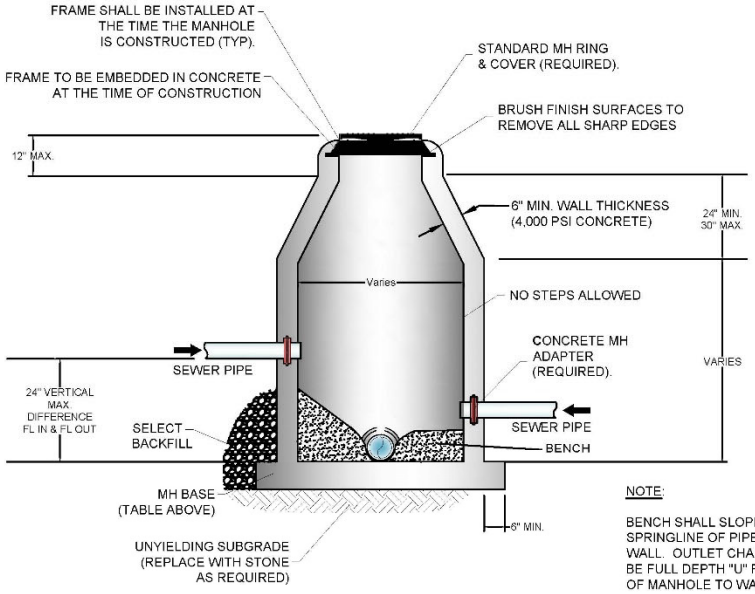

NOTE:

BENCH SHALL SLOPE FROM SPRINGLINE OF PIPE TO MANHOLE WALL. OUTLET CHANNEL SHALL BE FULL DEPTH "U" FROM CENTER OF MANHOLE TO WALL.

Inside Diameter of Manhole	Minimum Wall Thickness	Base Thickness	Minimum Ring & Cover Size
4' DIA	6"	8"	24" (< or Equal to 24" Pipes)
5' DIA	8"	10"	36" (> 24" Pipes)
6' DIA	8"	12"	

MANHOLE INFORMATION TABLE

DRAWN BY: NJ	CHECKED BY: PN
SANITARY SEWER DETAIL: SS01	
LAST REVISION DATE: 01/27/2020	
APPROVED: PN	01/27/2020

SANITARY SEWER
INTERIOR DROP MANHOLE

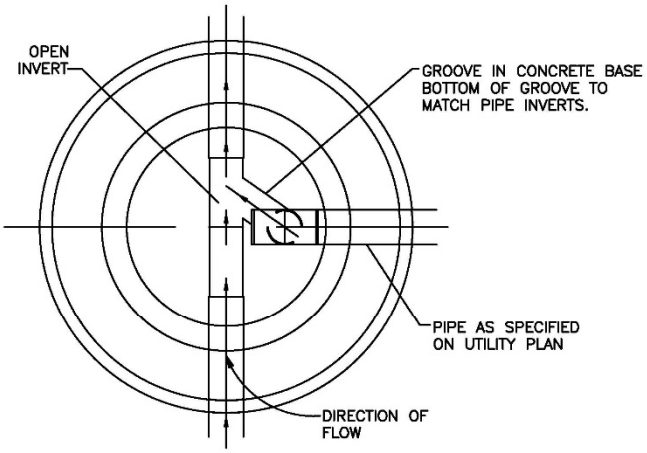

SECTION A-A

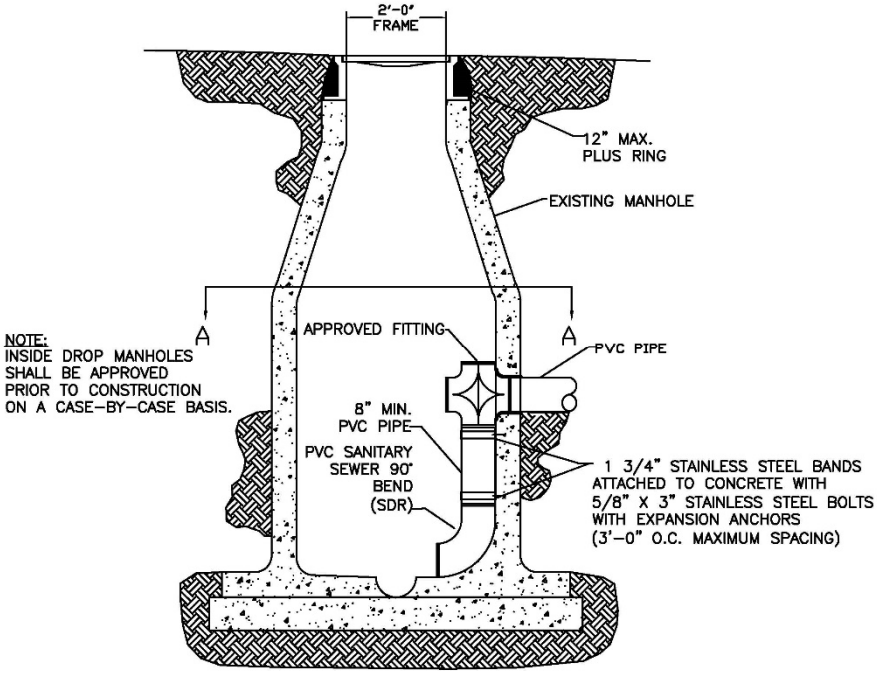

NOTE:
INSIDE DROP MANHOLES SHALL BE APPROVED PRIOR TO CONSTRUCTION ON A CASE-BY-CASE BASIS.

DRAWN BY: NJ	CHECKED BY: PN
SANITARY SEWER DETAIL: SS02	
LAST REVISION DATE: 01/27/2020	
APPROVED: PN	01/27/2020

SANITARY SEWER
EXTERIOR DROP MANHOLE

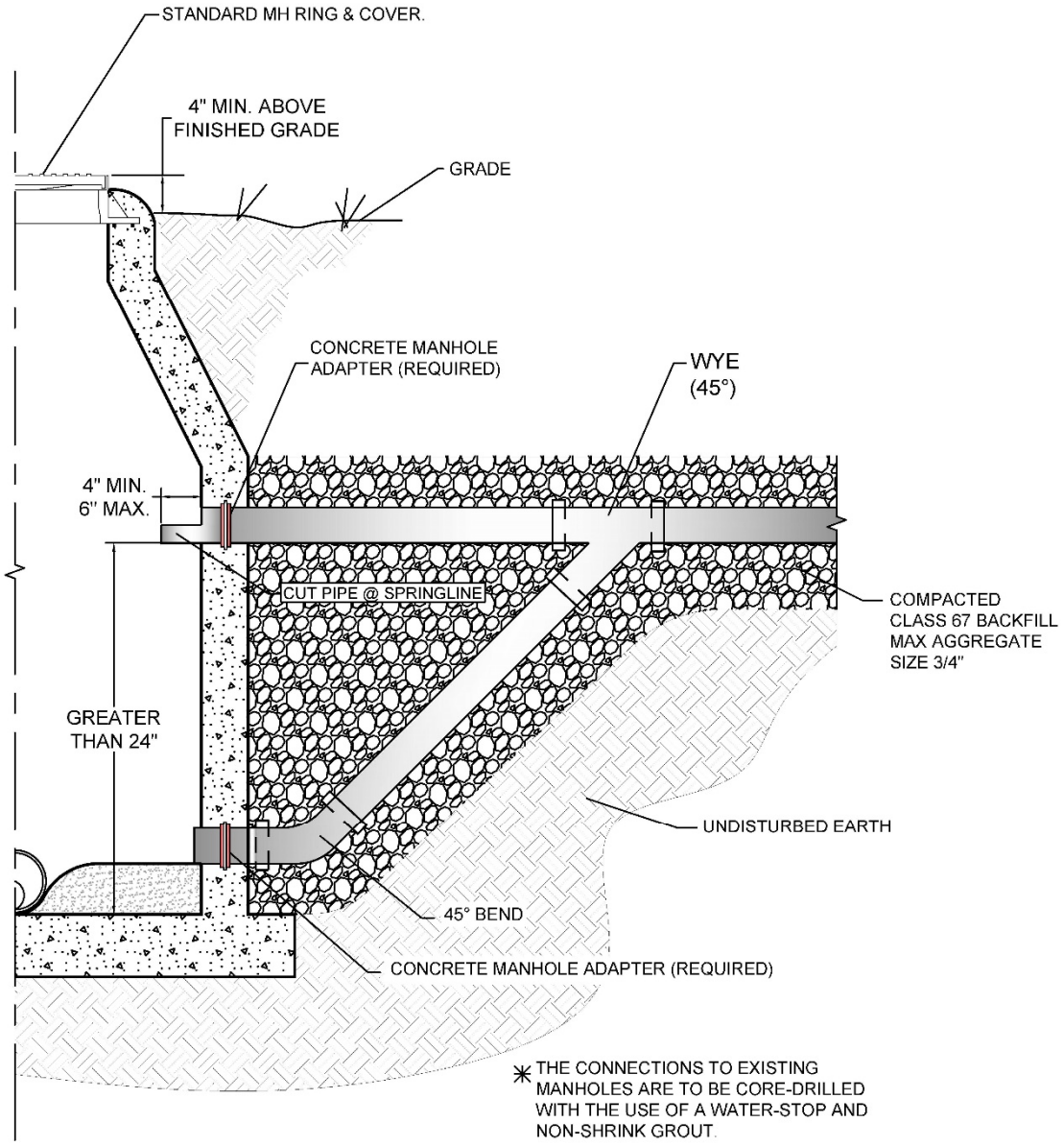

✳ THE CONNECTIONS TO EXISTING MANHOLES ARE TO BE CORE-DRILLED WITH THE USE OF A WATER-STOP AND NON-SHRINK GROUT.

DRAWN BY: NJ	CHECKED BY: PN
SANITARY SEWER DETAIL: SS03	
LAST REVISION DATE: 01/27/2020	
APPROVED: PN	01/27/2020

HEAVY DUTY MANHOLE
LID & FRAME

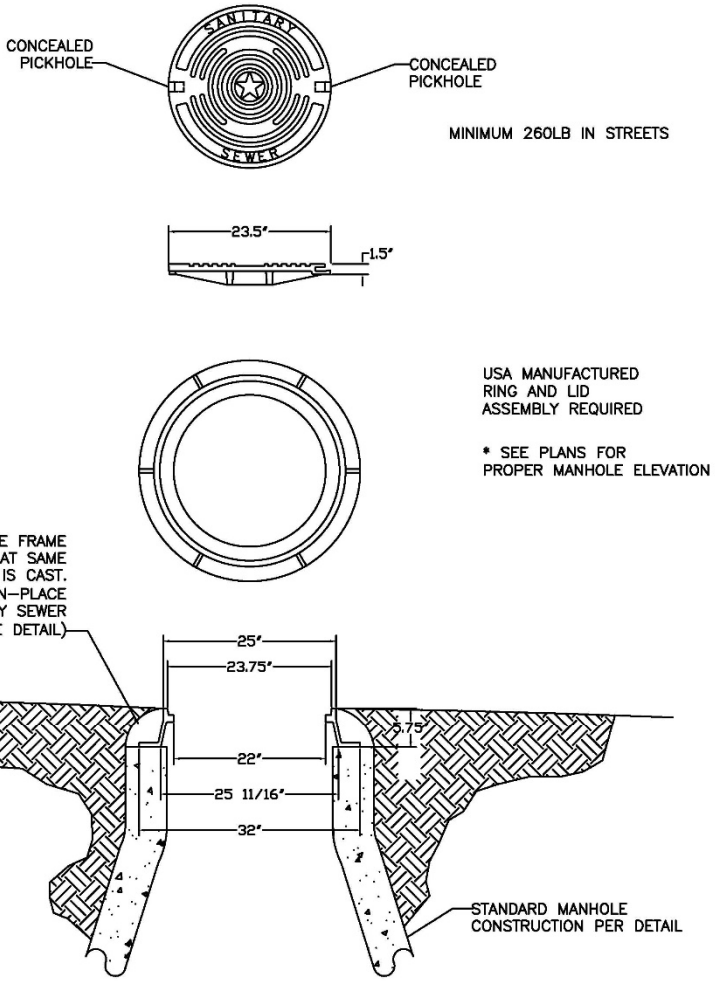

	DRAWN BY: NJ	CHECKED BY: PN
	SANITARY SEWER DETAIL: SS04	
	LAST REVISION DATE: 01/27/2020	
	APPROVED: PN	01/27/2020

FIRE HYDRANT DETAIL W/SWIVEL ANCHOR COUPLING

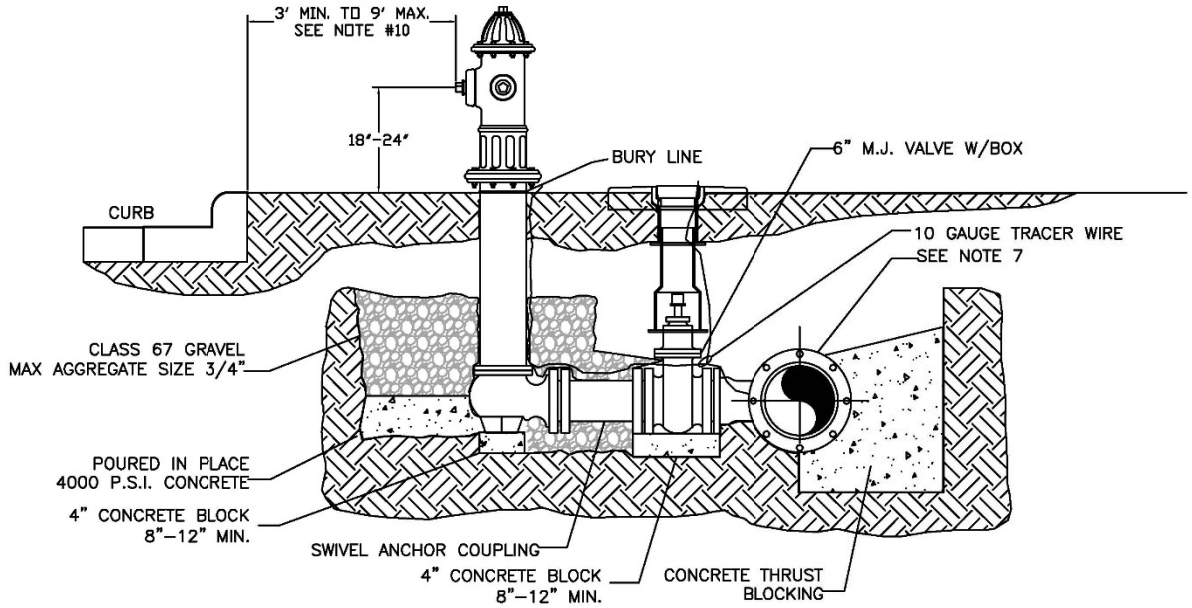

ELEVATION VIEW

NOTES:

1. DRAINAGE BED SHALL CONSIST OF CLASS 67 GRAVEL WITH A MAX AGGREGATE SIZE OF 3/4".
2. M.J. RETAINER GLANDS IF DISTANCE BETWEEN VALVE AND HYDRANT MUST BE GREATER THAN 13" SWIVEL ADAPTER.
3. FIRE HYDRANT TO BE BLOCKED AGAINST FIRM SOIL AS SHOWN.
4. ALL HYDRANTS SHALL BE INSTALLED PLUMB.
5. LARGE NOZZLE SHALL FACE CURB UNLESS OTHERWISE NOTED. ROTATE BARREL AS REQUIRED.
6. HYDRANT SHOULD NOT BE SET CLOSER THAN 4.0' TO OBSTRUCTIONS THAT ARE IN LINE WITH NOZZLE.
7. M.J. ANCHOR TEE, TAPPING SLEEVE OR TAPPING SADDLE MAY BE USED (SEE MATERIAL SPECIFICATIONS)
8. HYDRANTS TO BE SET AT DEPTHS GREATER THAN 6.0' SHALL BE SET WITH A MODIFIED FIRE HYDRANT SETTING.
9. POLYWRAP ENTIRE HYDRANT ASSEMBLY. DO NOT COVER WEEP HOLE DRAIN.
10. HYDRANTS WILL BE SET AT A MINIMUM OF 3' TO A MAXIMUM OF 9' BACK OF CURB, NOT IN SIDEWALK, FIRE LANE, OR RADIUS OR AS DIRECTED BY BENTONVILLE WATER DEPARTMENT.

THE CITY OF BENTONVILLE WASTEWATER WATER	DRAWN BY: JI	CHECKED BY: PN
	WATER DETAIL: W05	
	LAST REVISION DATE: 03/16/2021	
	APPROVED: PN	03/16/2021

DEEP BURY FIRE HYDRANTS

(BURY DEEPER THAN 6'–0")

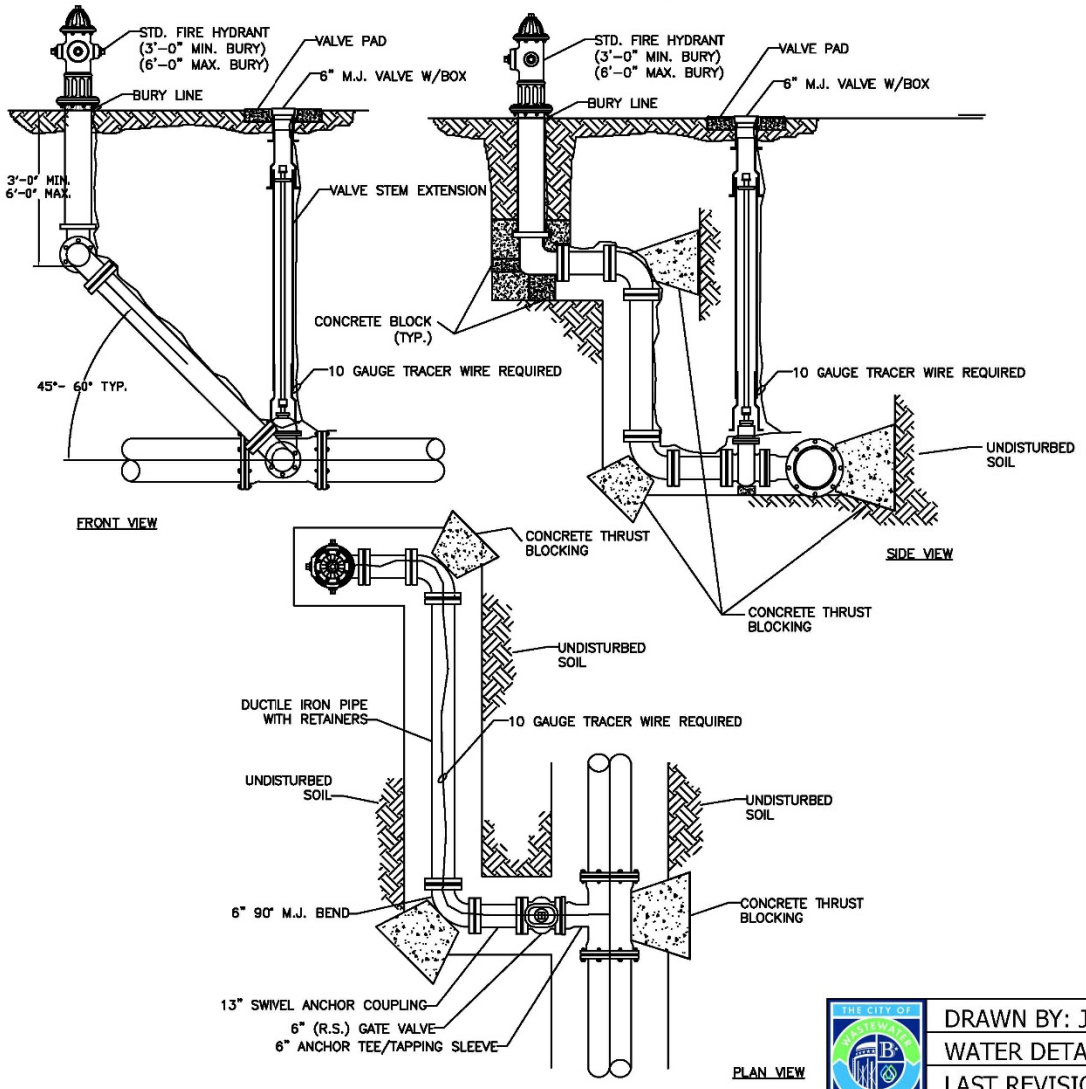

DRAWN BY: JI	CHECKED BY: PN
WATER DETAIL: W06	
LAST REVISION DATE: 03/16/2021	
APPROVED: PN	03/16/2021

VALVE BOX VALVE STEM & TRACER WIRE INSTALLATION

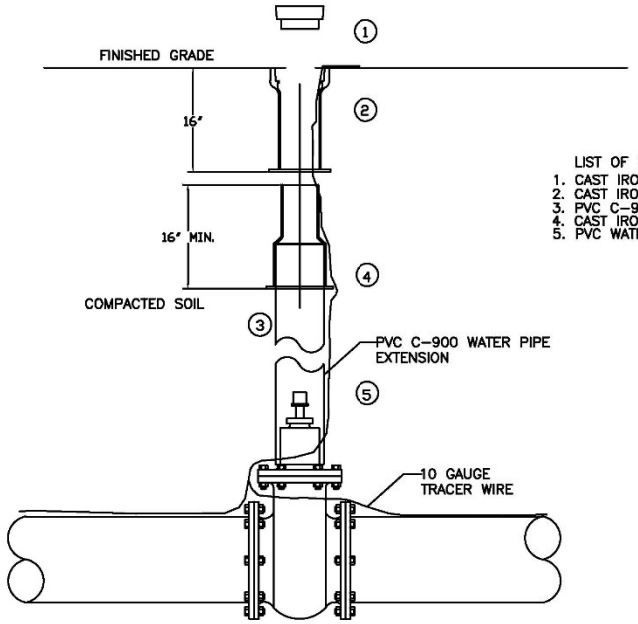

LIST OF MATERIAL
1. CAST IRON COVER STAMPED (WATER)
2. CAST IRON TOP SECTION
3. PVC C-900 EXTENSION PIECE
4. CAST IRON BOTTOM SECTION
5. PVC WATER PIPE EXTENSION

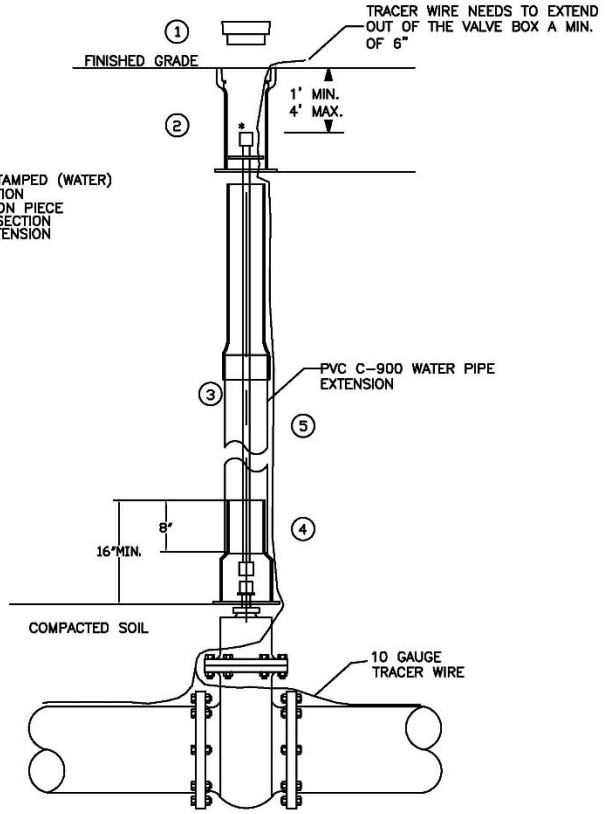

NOTES:

1. IF EXTENSION PIECE IS NEEDED, PVC C-900 WATER PIPE MAY BE USED.
2. EXTENSION PIECE CAN BE CUT TO LENGTH REQUIRED.
3. TRACER WIRE NEEDS TO EXTEND OUT OF THE VALVE BOX A MINIMUM OF 6"

**PROVIDE VALVE STEM EXTENSION WITH CENTERING DEVICE IF GREATER THAN 4.0' DEEP.*

DRAWN BY: NJ	CHECKED BY: PN
WATER DETAIL: W07	
LAST REVISION DATE: 01/27/2020	
APPROVED: PN	01/27/2020

RESTRAINED GATE VALVE

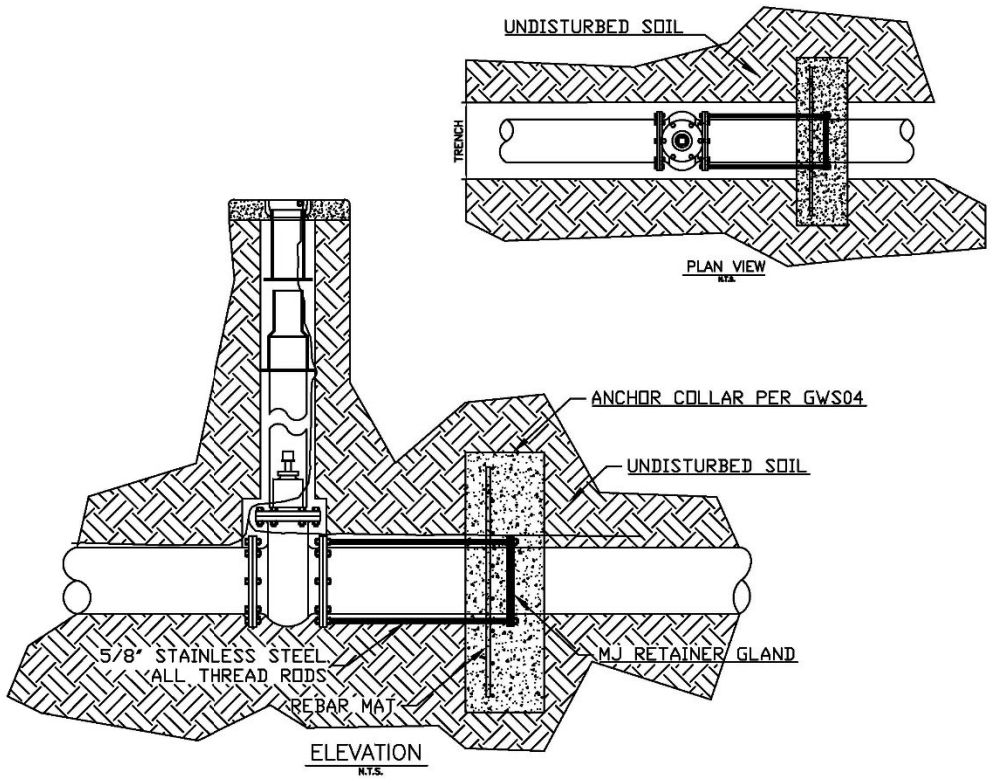

	DRAWN BY: NJ	CHECKED BY: PN
	WATER DETAIL: W08	
	LAST REVISION DATE: 01/27/2020	
	APPROVED: PN	01/27/2020

2" COMBINATION AIR/VACUUM VALVE DETAIL

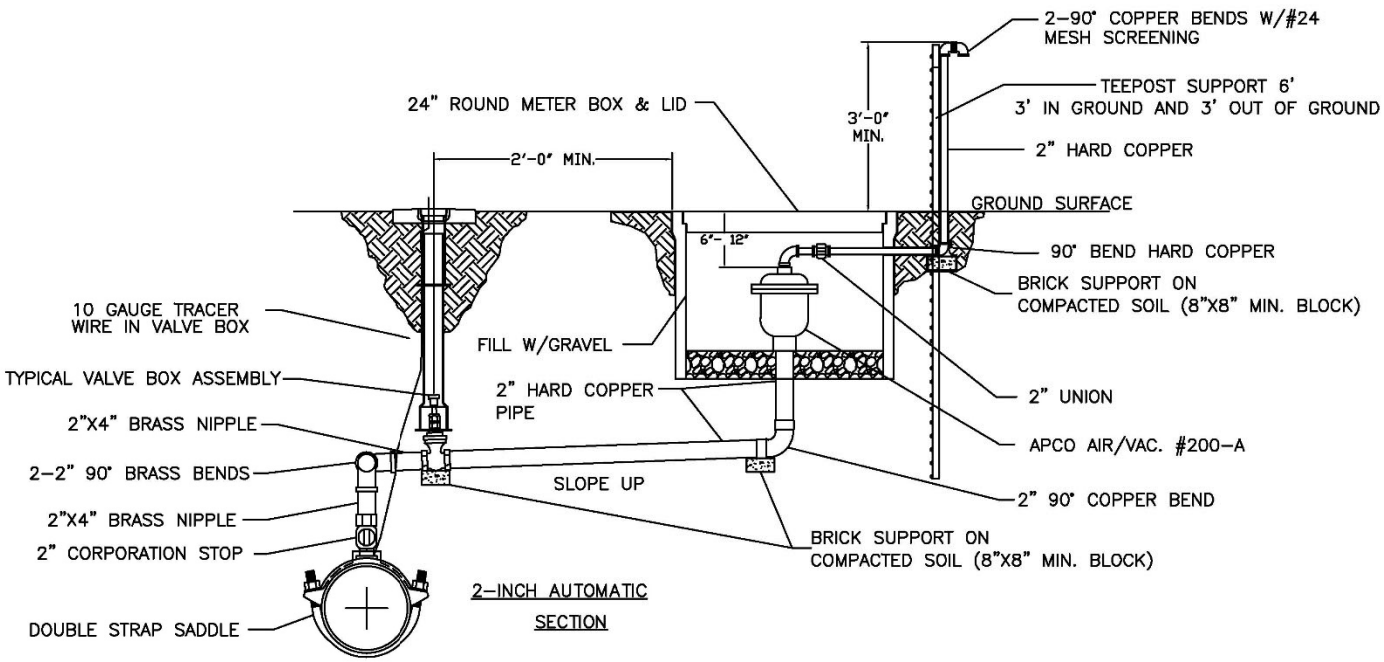

NOTES:
1. ALL THREADED CONNECTIONS SHALL HAVE A DOUBLE WRAP OF TEFLON TAPE ON THREADS.
2. DRILL HOLE IN SIDE OF METER BOX FOR OUTLET PIPING.
3. VALVES WILL BE PIPED TO POINT BEYOND PAVEMENT AND SHOULDER.

DRAWN BY: NJ	CHECKED BY: PN
WATER DETAIL: W09	
LAST REVISION DATE: 01/27/2020	
APPROVED: PN	01/27/2020

1" COMBINATION AIR/VACUUM VALVE DETAIL

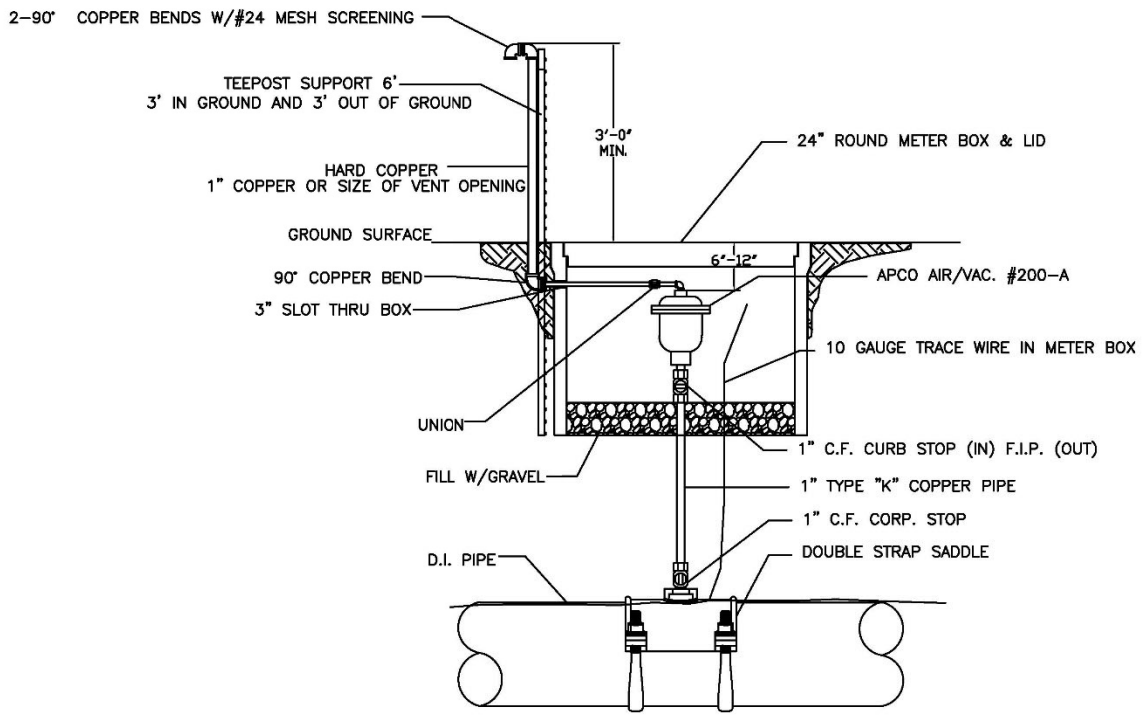

NOTES:

1. ALL THREADED CONNECTIONS SHALL HAVE A DOUBLE WRAP OF TEFLON TAPE ON THREADS.
2. DRILL HOLE IN SIDE OF METER BOX FOR OUTLET PIPING.
3. VALVES WILL BE PIPED TO POINT BEYOND PAVEMENT AND SHOULDER.

DRAWN BY: NJ	CHECKED BY: PN
WATER DETAIL: W10	
LAST REVISION DATE: 01/27/2020	
APPROVED: PN	01/27/2020

SWING CONNECTION – NEW MAIN TO EXISTING MAIN

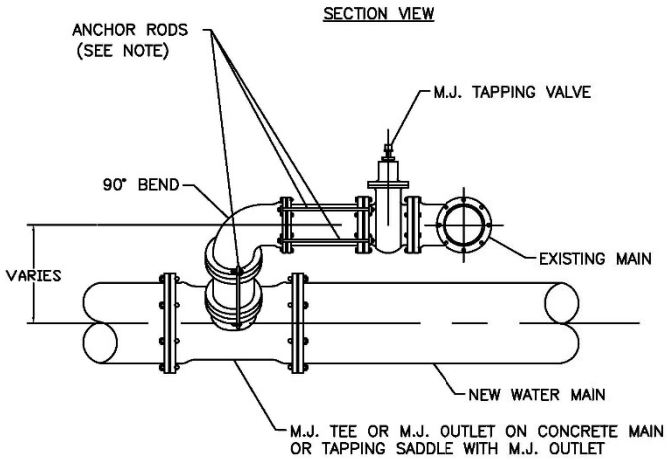

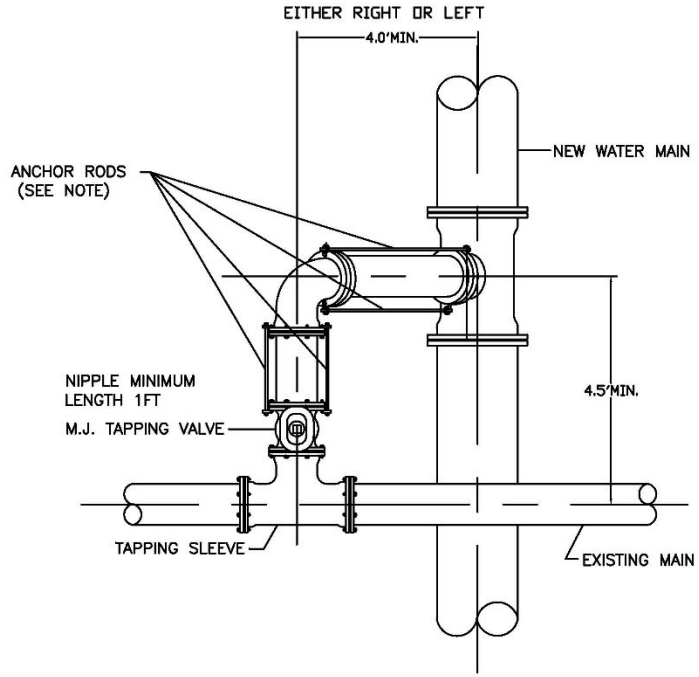

THRUST BLOCKING REQUIRED AT TEES AND ELBOWS.

PIPE SIZE	6"	8"	12"
RODS PER NIPPLE	2	2	4

NOTES:

1. CONTRACTOR SHALL LOCATE EXISTING MAIN IN ADVANCE OF LAYING NEW LINE IN ORDER TO ASSURE ADEQUATE LENGTH TO ADJUST DEPTH OF NEW MAIN.
2. DIMENSIONS SHOWN ARE RECOMENDED MINIMUMS TO PROVIDE ADEQUATE ROOM FOR TIGHTENING BOLTS ON JOINTS. (OTHER DIMENSIONS MAY BE USED)
3. PROVIDE STAINLESS STEEL "ALL THREAD(MIN 5/8")" TIE RODS WITH EYE BOLTS FOR ANCHORING ALL JOINTS.
4. RODS SHALL BE FIELD CUT TO FIT & SHALL BE PROTECTED WITH POLYWRAP.
5. ROTATE TEE UP & ELBOW DOWN AS REQUIRED TO MATCH.
6. USE TYPICAL CONCRETE BLOCKING REQUIRED.

DRAWN BY: NJ	CHECKED BY: PN	
WATER DETAIL: W11		
LAST REVISION DATE: 01/27/2020		
APPROVED: PN	01/27/2020	

METER VAULT DETAIL FOR 4" – 8" METERS (TYPICAL)

(DIMENSIONS MAY VARY FOR METER SIZES)

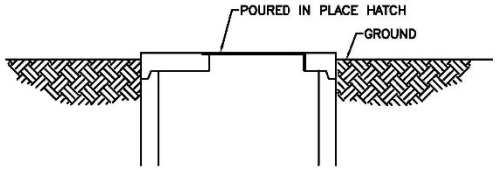

SIDE VIEW

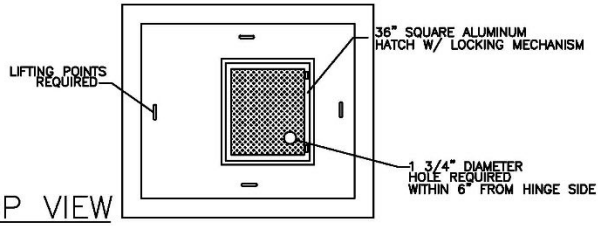

TOP VIEW

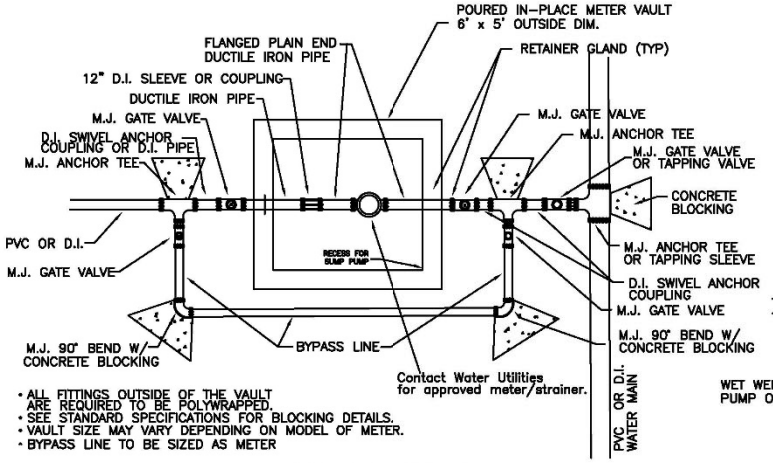

PLAN VIEW

N.T.S.

• NOTE: IF VAULT IS SQUARE, REBAR IS REQUIRED.
#4 BAR ON 12" ON CENTER EACH WAY FOR THE BOTTOM
#4 BAR ON 8" ON CENTER EACH WAY FOR THE WALLS
#4 BAR ON 8" ON CENTER EACH WAY FOR THE LID

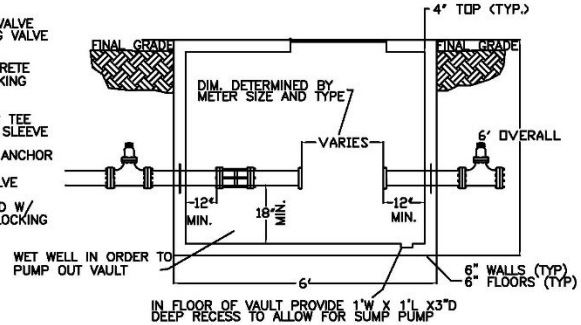

ELEVATION

N.T.S.

DRAWN BY: NJ	CHECKED BY: PN
WATER DETAIL: W12	
LAST REVISION DATE: 01/27/2020	
APPROVED: PN	01/27/2020

TYPICAL CUT/CAP DETAIL

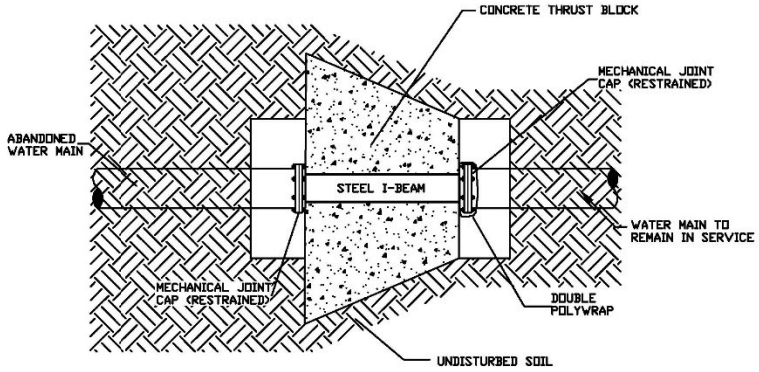

PLAN VIEW

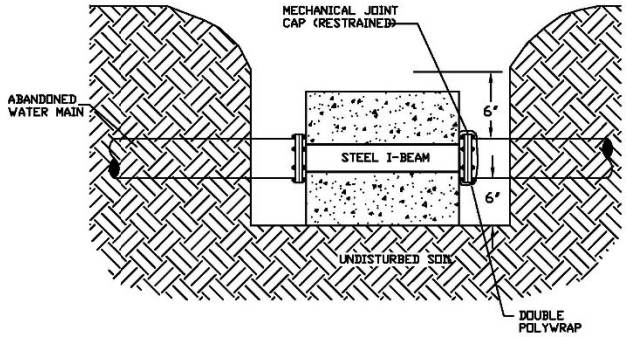

PROFILE VIEW

	DRAWN BY: NJ	CHECKED BY: PN
	WATER DETAIL: W13	
	LAST REVISION DATE: 01/27/2020	
	APPROVED: PN	01/27/2020

FROST FREE HOSE BIBB WITH VACUUM BREAKER

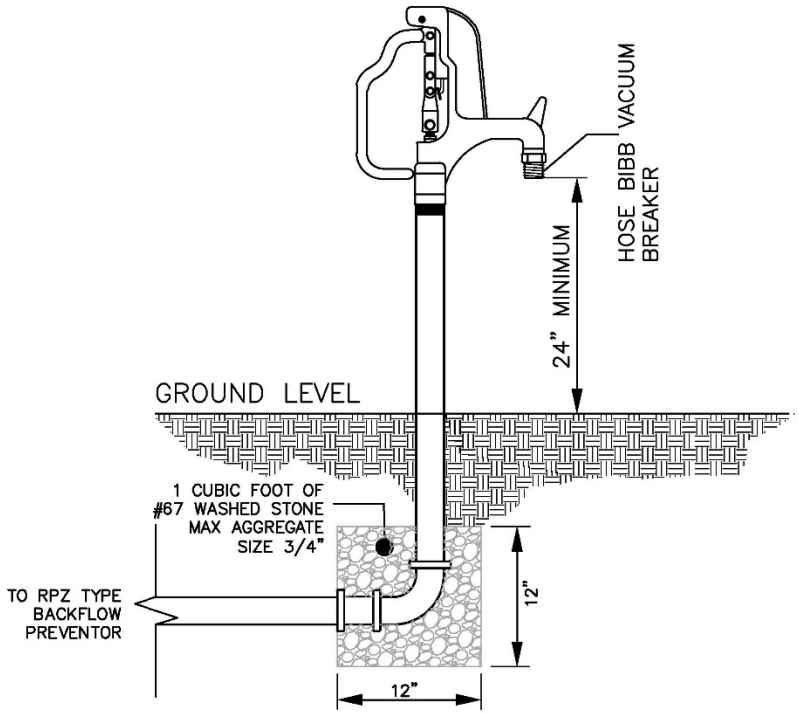

ELEVATION

N.T.S.

	DRAWN BY: JI	CHECKED BY: PN
	WATER DETAIL: W14	
	LAST REVISION DATE: 03/16/2021	
	APPROVED: PN	03/16/2021

REDUCED PRESSURE (RP) BACKFLOW
IRRIGATION ONLY

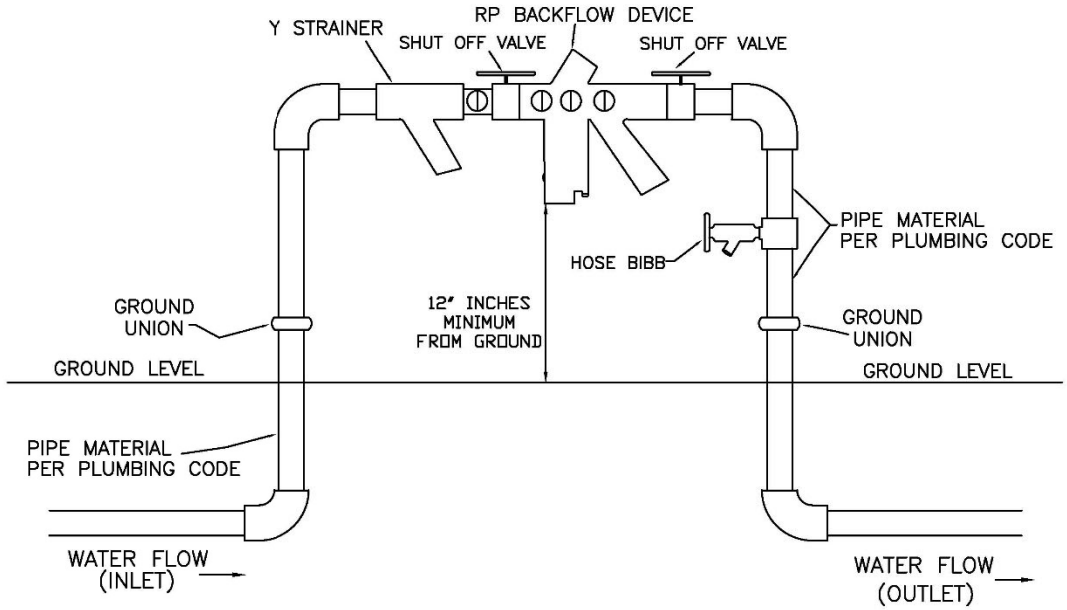

	DRAWN BY: NJ	CHECKED BY: PN
	WATER DETAIL: W15	
	LAST REVISION DATE: 01/27/2020	
	APPROVED: PN	01/27/2020

REDUCED PRESSURE (RP) BACKFLOW
DOMESTIC ONLY

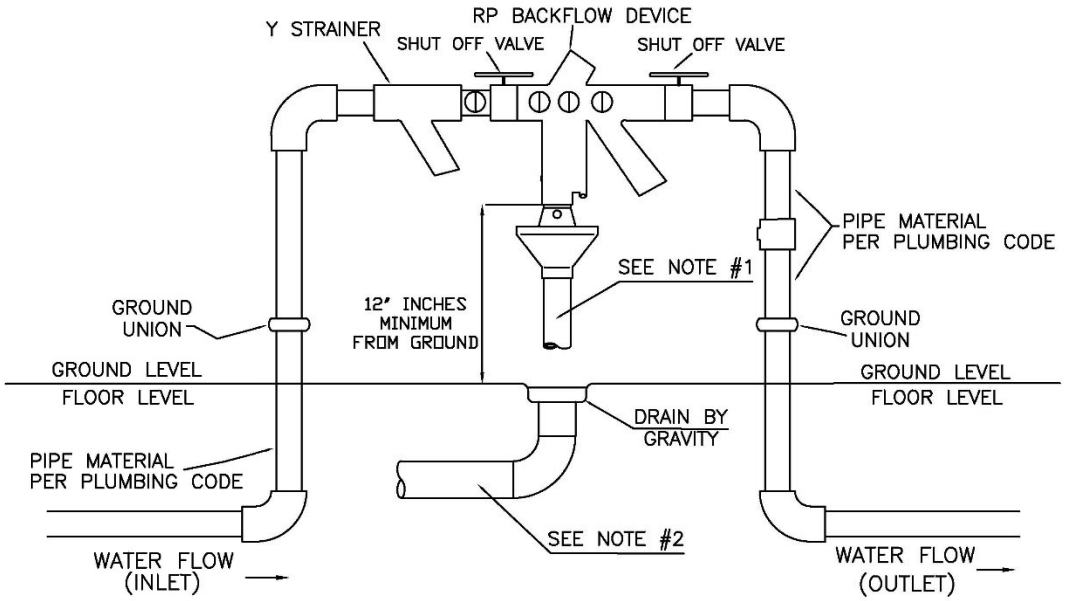

INDOOR APPLICATION ONLY NOTES:

1. AN AIR GAP DRAIN IS REQUIRED TO REDUCE SPLASHING OF MINOR DISCHARGES FROM THE RELIEF VALVE DRAIN PORT.

2. INDOOR INSTALLATION OF RP'S SHOULD PROVIDE FOR DRAINAGE CAPABLE OF HANDLING IN EXCESS OF THE MAXIMUM DISCHARGE RATE EXPECTED BY THE BACKFLOW ASSEMBLY MANUFACTURER.

DRAWN BY: NJ	CHECKED BY: PN
WATER DETAIL: W16	
LAST REVISION DATE: 01/27/2020	
APPROVED: PN	01/27/2020

TEMPORARY 1" BLOW OFF ASSEMBLY
SAMPLE POINTS

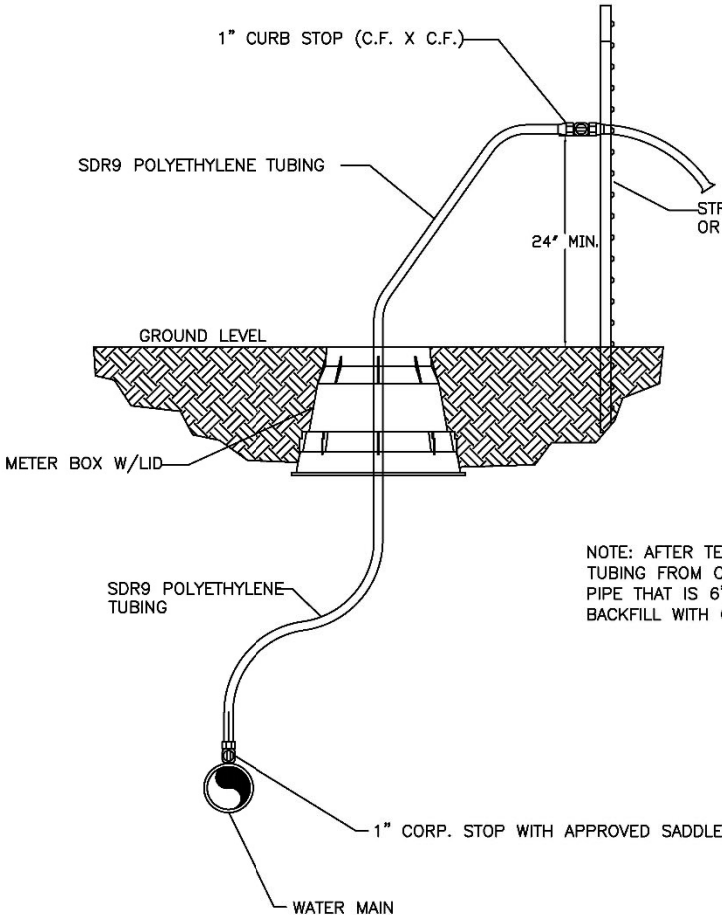

NOTE: AFTER TEST IS COMPLETE REMOVE SDR9 POLY TUBING FROM CORP STOP. PLACE A 4" PIECE OF PVC PIPE THAT IS 6"–12" LONG OVER CORP. STOP. BACKFILL WITH CLASS #67 MAX AGGREGATE SIZE 3/4".

DRAWN BY: NJ	CHECKED BY: PN
WATER DETAIL: W01	
LAST REVISION DATE: 01/27/2020	
APPROVED: PN	01/27/2020

WATER SERVICE DETAIL 1”

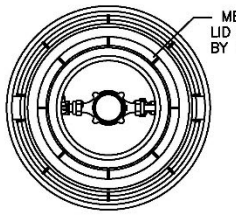

SINGLE SET

NOTE:
1” SDR9 POLY TUBING WILL
SUPPLY WATER ONLY TO A SINGLE
1” METER SERVICE.

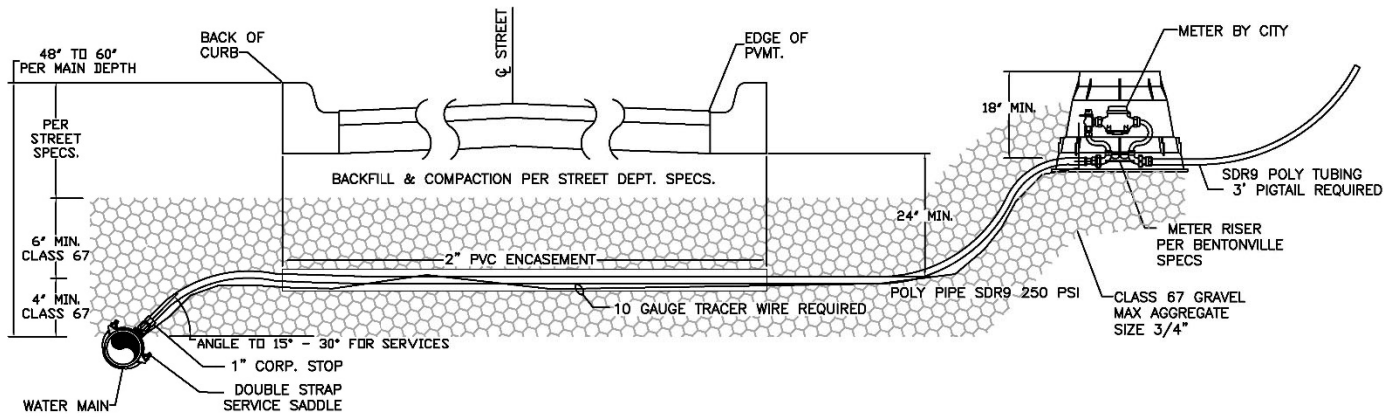

DRAWN BY: NJ	CHECKED BY: PN
WATER DETAIL: W02	
LAST REVISION DATE: 01/27/2020	
APPROVED: PN	DATE: 01/27/2020

WATER SERVICE DETAIL 5/8"

NOTE:
1" TUBING WILL
SUPPLY WATER TO A SINGLE
5/8" METER SERVICE OR A DOUBLE
5/8" METER SERVICE.

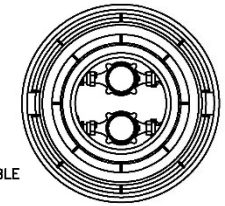

DOUBLE SET

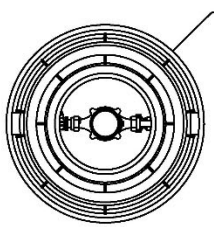

SINGLE SET

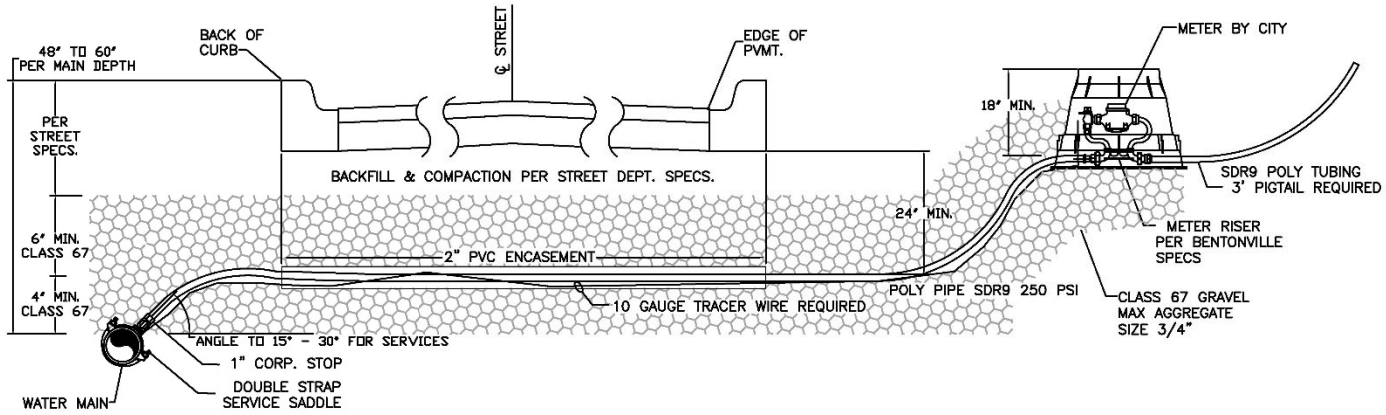

DRAWN BY: NJ	CHECKED BY: PN
WATER DETAIL: W03	
LAST REVISION DATE: 01/27/2020	
APPROVED: PN	01/27/2020

FIRE HYDRANT DETAIL W/ RETAINER GLANDS

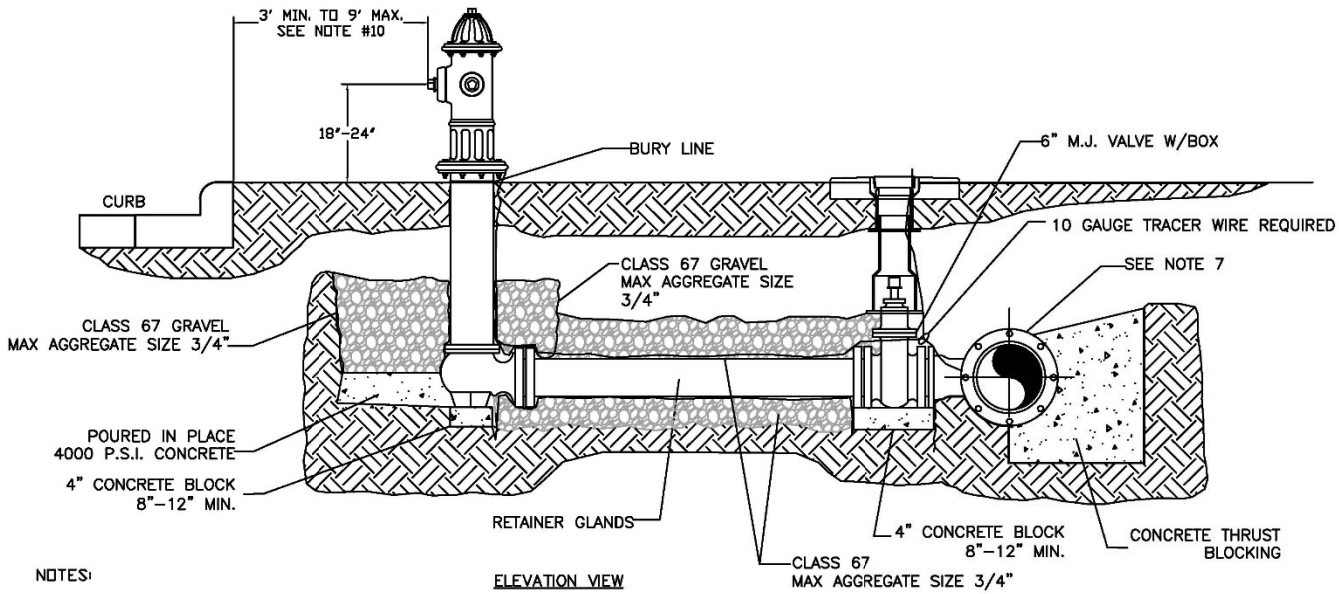

ELEVATION VIEW

NOTES:

1. DRAINAGE BED SHALL CONSIST OF CLASS 67 GRAVEL WITH A MAX AGGREGATE SIZE OF 3/4".
2. USE 6" NIPPLE WITH M.J. RETAINER GLANDS IF DISTANCE BETWEEN VALVE AND HYDRANT MUST BE GREATER THAN 13" SWIVEL ADAPTER.
3. FIRE HYDRANT TO BE BLOCKED AGAINST FIRM SOIL AS SHOWN.
4. ALL HYDRANTS SHALL BE INSTALLED PLUMB.
5. LARGE NOZZLE SHALL FACE CURB UNLESS OTHERWISE NOTED. ROTATE BARREL AS REQUIRED.
6. HYDRANT SHOULD NOT BE SET CLOSER THAN 4.0' TO OBSTRUCTIONS THAT ARE IN LINE WITH NOZZLE.
7. M.J. ANCHOR TEE, TAPPING SLEEVE OR TAPPING SADDLE MAY BE USED (SEE MATERIAL SPECIFICATIONS)
8. HYDRANTS TO BE SET AT DEPTHS GREATER THAN 6.0' SHALL BE SET WITH A MODIFIED FIRE HYDRANT SETTING.
9. POLYWRAP ENTIRE HYDRANT ASSEMBLY. DO NOT COVER WEEP HOLE DRAIN.
10. HYDRANTS WILL BE SET AT A MINIMUM OF 3' TO A MAXIMUM OF 9' BACK OF CURB OR EDGE OF DRAINING SURFACE, NOT IN SIDEWALK, FIRE LANE, OR RADIUS OR AS DIRECTED BY BENTONVILLE WATER DEPARTMENT.

THE CITY OF BENTONVILLE WASTEWATER WATER	DRAWN BY: JI	CHECKED BY: PN
	WATER DETAIL: W04	
	LAST REVISION DATE: 03/16/2021	
	APPROVED: PN	03/16/2021

ORDINANCE NO. _____

AN ORDINANCE AMENDING ARTICLE 98-VI OF THE MUNICIPAL CODE TO INCLUDE THE 2021 WATER UTILITES DEPARTMENT SPECIFICATIONS

NOW, THEREFORE, BE IT ORDAINED BY THE CITY COUNCIL OF THE CITY OF BENTONVILLE, ARKANSAS:

Section 1: That Article VI including sections 98-692 through 98-709 of the Bentonville Municipal Code be amended to reflect the specifications set forth in the attached Exhibit "A"

Section 2: That all ordinances or parts of ordinances in conflict herewith are hereby repealed.

Section 3: That the City of Bentonville Water Utilities Department Specification in the following Exhibit "A", three paper copies and an electronic copy of which are on file with the City Clerk and which is hereby adopted by reference as though it were copied herein fully.

PASSED and APPROVED this _____ day of _____, 2021.

APPROVED:

_____
Stephanie Orman, Mayor

ATTEST:

_____
Kirby Romines, City Clerk

Agenda Item Form

Date of City Council Meeting	**6/22/2021**
Department	**Fire**
Submitted by	**Brent Boydston**
Phone	**(479) 271-3151**

Item Type: (*Check Applicable Item Type*)					
☐ Budget Adjustment	☐ Change Order	☐ Informational	☐ Ordinance	☐ Resolution	☐ Bid Award

Recommendation/Suggested Action *(Enter recommendation in space below)*:

Resolution authorizing the Mayor and City clerk to enter in to a contract with Jackson, Brown, and Palculict (JBP) Architects to design an addition to Fire Station # 3. JBP is doing the design work for 7.25% of the construction cost, estimated cost of construction is $750,000.00. JBP was selected using the City's standard SOQ selection process for professional services in accordance with state law.

Estimated Cost	**$54,375.00**
Is this Item Budgeted?	☑ Yes ☐ No
If no, please explain how item will be funded *(briefly explain in space below)* **:**	

Inter-office Memorandum

To: Mayor Orman and City Council

From: Brent Boydston, Fire Chief

CC: Camille Thompson, Staff Attorney, Gladys Shoemake, Purchasing Manager, Jake Harper, Finance Director

Date: June 22, 2021

Re: Station # 3 Architect

With the increase of staffing, Station 3 needs an addition added to the structure for individual bedrooms and some updating. This station was opened in 1996.

Fire Department personnel (Selection Committee) reviewed SOQs for architects and chose Jackson, Brown, Palculict (JBP) Architects to do the design. JBP has submitted a contract for 7.25% of the cost of the construction for the design, estimated cost of the construction is $750,000.00.

AIA® Document B104™ – 2017

Standard Abbreviated Form of Agreement Between Owner and Architect

AGREEMENT made as of the first day of June in the year Two Thousand Twenty One
(In words, indicate day, month and year.)

BETWEEN the Architect's client identified as the Owner:
(Name, legal status, address and other information)

City of Bentonville
117 West Central
Bentonville, Arkansas 72712
Telephone Number: (479) 271-5966
Fax Number: (479) 271-3105

and the Architect:
(Name, legal status, address and other information)

Jackson Brown Palculict Architects, Inc.
12921 Cantrell Road, Suite 201
Little Rock, AR 72223
Telephone Number: (501) 664-8700
Fax Number: (501) 664-5189

for the following Project:
(Name, location and detailed description)

Fire Station No. 3 Addition & Renovation

The Owner and Architect agree as follows.

ADDITIONS AND DELETIONS:
The author of this document has added information needed for its completion. The author may also have revised the text of the original AIA standard form. An *Additions and Deletions Report* that notes added information as well as revisions to the standard form text is available from the author and should be reviewed. A vertical line in the left margin of this document indicates where the author has added necessary information and where the author has added to or deleted from the original AIA text.

This document has important legal consequences. Consultation with an attorney is encouraged with respect to its completion or modification.

Init.
/

AIA Document B104™ – 2017. Copyright © 1974, 1978, 1987, 1997, 2007 and 2017 by The American Institute of Architects. All rights reserved. The "American Institute of Architects," "AIA," the AIA Logo, and "AIA Contract Documents" are registered trademarks and may not be used without permission. This document was produced by AIA software at 15:41:37 ET on 06/01/2021 under Order No.9909046730 which expires on 01/04/2022, is not for resale, is licensed for one-time use only, and may only be used in accordance with the AIA Contract Documents® Terms of Service. To report copyright violations, e-mail copyright@aia.org.
User Notes: (1986288177)

TABLE OF ARTICLES

1 INITIAL INFORMATION

2 ARCHITECT'S RESPONSIBILITIES

3 SCOPE OF ARCHITECT'S BASIC SERVICES

4 SUPPLEMENTAL AND ADDITIONAL SERVICES

5 OWNER'S RESPONSIBILITIES

6 COST OF THE WORK

7 COPYRIGHTS AND LICENSES

8 CLAIMS AND DISPUTES

9 TERMINATION OR SUSPENSION

10 MISCELLANEOUS PROVISIONS

11 COMPENSATION

12 SPECIAL TERMS AND CONDITIONS

13 SCOPE OF THE AGREEMENT

ARTICLE 1 INITIAL INFORMATION

§ 1.1 This Agreement is based on the Initial Information set forth below:
(State below details of the Project's site and program, Owner's contractors and consultants, Architect's consultants, Owner's budget for the Cost of the Work, and other information relevant to the Project.)

N/A

§ 1.2 The Owner and Architect may rely on the Initial Information. Both parties, however, recognize that such information may materially change and, in that event, the Owner and the Architect shall appropriately adjust the schedule, the Architect's services and the Architect's compensation. The Owner shall adjust the Owner's budget for the Cost of the Work and the Owner's anticipated design and construction milestones, as necessary, to accommodate material changes in the Initial Information.

§ 1.3 The parties shall agree upon protocols governing the transmission and use of Instruments of Service or any other information or documentation in digital form. The parties will use AIA Document E203™–2013, Building Information Modeling and Digital Data Exhibit, to establish the protocols for the development, use, transmission, and exchange of digital data.

§ 1.3.1 Any use of, or reliance on, all or a portion of a building information model without agreement to protocols governing the use of, and reliance on, the information contained in the model and without having those protocols set forth in AIA Document E203™–2013, Building Information Modeling and Digital Data Exhibit, and the requisite AIA Document G202™–2013, Project Building Information Modeling Protocol Form, shall be at the using or relying party's sole risk and without liability to the other party and its contractors or consultants, the authors of, or contributors to, the building information model, and each of their agents and employees.

AIA Document B104™ – 2017. Copyright © 1974, 1978, 1987, 1997, 2007 and 2017 by The American Institute of Architects. All rights reserved. The "American Institute of Architects," "AIA," the AIA Logo, and "AIA Contract Documents" are registered trademarks and may not be used without permission. This document was produced by AIA software at 15:41:37 ET on 06/01/2021 under Order No.9909046730 which expires on 01/04/2022, is not for resale, is licensed for one-time use only, and may only be used in accordance with the AIA Contract Documents® Terms of Service. To report copyright violations, e-mail copyright@aia.org.
User Notes: (1986288177)

ARTICLE 2 ARCHITECT'S RESPONSIBILITIES

§ 2.1 The Architect shall provide the professional services set forth in this Agreement consistent with the professional skill and care ordinarily provided by architects practicing in the same or similar locality under the same or similar circumstances. The Architect shall perform its services as expeditiously as is consistent with such professional skill and care and the orderly progress of the Project.

§ 2.2 The Architect shall maintain the following insurance until termination of this Agreement. If any of the requirements set forth below are in addition to the types and limits the Architect normally maintains, the Owner shall pay the Architect as set forth in Section 11.8:
(Identify types and limits of insurance coverage, and other insurance requirements applicable to the Agreement, if any.)

.1 General Liability

$1,000,000 each occurrence
$300,000 damage to rented premises (each occurrence)
$5,000 medical expenses (any one person)
$2,000,000 general aggregate

.2 Automobile Liability

$1,000,000 combined single limit (each accident)
$1,000,000 bodily injury (per person)
$1,000,000 bodily injury (per accident)
$1,000,000 property damage (per accident)

.3 Workers' Compensation

$100,000 employer's limit each accident
$100,000 employer's limit disease – each employee
$500,000 employer's limit disease – policy limit

.4 Professional Liability

$1,000,000 occurrence limit
$2,000,000 aggregate limit

ARTICLE 3 SCOPE OF ARCHITECT'S BASIC SERVICES

§ 3.1 The Architect's Basic Services consist of those described in this Article 3 and include usual and customary structural, mechanical, and electrical engineering services. Services not set forth in this Article 3 are Supplemental or Additional Services.

§ 3.1.1 The Architect shall coordinate its services with those services provided by the Owner and the Owner's consultants. The Architect shall be entitled to rely on (1) the accuracy and completeness of the services and information furnished by the Owner and (2) the Owner's approvals. The Architect shall provide prompt written notice to the Owner if the Architect becomes aware of any error, omission, or inconsistency in such services or information.

§ 3.1.2 As soon as practicable after the date of this Agreement, the Architect shall submit for the Owner's approval a schedule for the performance of the Architect's services. Once approved by the Owner, time limits established by the schedule shall not, except for reasonable cause, be exceeded by the Architect or Owner. With the Owner's approval, the Architect shall adjust the schedule, if necessary, as the Project proceeds until the commencement of construction.

§ 3.1.3 The Architect shall assist the Owner in connection with the Owner's responsibility for filing documents required for the approval of governmental authorities having jurisdiction over the Project.

AIA Document B104™ – 2017. Copyright © 1974, 1978, 1987, 1997, 2007 and 2017 by The American Institute of Architects. All rights reserved. The "American Institute of Architects," "AIA," the AIA Logo, and "AIA Contract Documents" are registered trademarks and may not be used without permission. This document was produced by AIA software at 15:41:37 ET on 06/01/2021 under Order No.9909046730 which expires on 01/04/2022, is not for resale, is licensed for one-time use only, and may only be used in accordance with the AIA Contract Documents® Terms of Service. To report copyright violations, e-mail copyright@aia.org.
User Notes: (1986288177)

§ 3.2 Design Phase Services

§ 3.2.1 The Architect shall review the program and other information furnished by the Owner, and shall review laws, codes, and regulations applicable to the Architect's services.

§ 3.2.2 The Architect shall discuss with the Owner the Owner's program, schedule, budget for the Cost of the Work, Project site, and alternative approaches to design and construction of the Project. The Architect shall reach an understanding with the Owner regarding the Project requirements.

§ 3.2.3 The Architect shall consider the relative value of alternative materials, building systems and equipment, together with other considerations based on program, aesthetics, and any sustainable objectives, in developing a design for the Project that is consistent with the Owner's schedule and budget for the Cost of the Work.

§ 3.2.4 Based on the Project requirements, the Architect shall prepare Design Documents for the Owner's approval consisting of drawings and other documents appropriate for the Project and the Architect shall prepare and submit to the Owner an estimate of the Cost of the Work prepared in accordance with Section 6.3.

§ 3.2.5 The Architect shall submit the Design Documents to the Owner, and request the Owner's approval.

§ 3.3 Construction Documents Phase Services

§ 3.3.1 Based on the Owner's approval of the Design Documents, the Architect shall prepare for the Owner's approval Construction Documents consisting of Drawings and Specifications setting forth in detail the requirements for the construction of the Work. The Owner and Architect acknowledge that in order to construct the Work the Contractor will provide additional information, including Shop Drawings, Product Data, Samples and other similar submittals, which the Architect shall review in accordance with Section 3.4.4.

§ 3.3.2 The Architect shall incorporate the design requirements of governmental authorities having jurisdiction over the Project into the Construction Documents.

§ 3.3.3 The Architect shall submit the Construction Documents to the Owner, update the estimate for the Cost of the Work and advise the Owner of any adjustments to the estimate of the Cost of the Work, take any action required under Section 6.5, and request the Owner's approval.

§ 3.3.4 The Architect, following the Owner's approval of the Construction Documents and of the latest estimate of the Cost of the Work, shall assist the Owner in obtaining bids or proposals and awarding and preparing contracts for construction.

§ 3.4 Construction Phase Services

§ 3.4.1 General

§ 3.4.1.1 The Architect shall provide administration of the Contract between the Owner and the Contractor as set forth below and in AIA Document A104™–2017, Standard Abbreviated Form of Agreement Between Owner and Contractor. If the Owner and Contractor modify AIA Document A104–2017, those modifications shall not affect the Architect's services under this Agreement unless the Owner and the Architect amend this Agreement.

§ 3.4.1.2 The Architect shall advise and consult with the Owner during the Construction Phase Services. The Architect shall have authority to act on behalf of the Owner only to the extent provided in this Agreement. The Architect shall not have control over, charge of, or responsibility for the construction means, methods, techniques, sequences or procedures, or for safety precautions and programs in connection with the Work, nor shall the Architect be responsible for the Contractor's failure to perform the Work in accordance with the requirements of the Contract Documents. The Architect shall be responsible for the Architect's negligent acts or omissions, but shall not have control over or charge of and shall not be responsible for, acts or omissions of the Contractor or of any other persons or entities performing portions of the Work.

§ 3.4.1.3 Subject to Section 4.2, the Architect's responsibility to provide Construction Phase Services commences with the award of the Contract for Construction and terminates on the date the Architect issues the final Certificate for Payment.

AIA Document B104™ – 2017. Copyright © 1974, 1978, 1987, 1997, 2007 and 2017 by The American Institute of Architects. All rights reserved. The "American Institute of Architects," "AIA," the AIA Logo, and "AIA Contract Documents" are registered trademarks and may not be used without permission. This document was produced by AIA software at 15:41:37 ET on 06/01/2021 under Order No.9909046730 which expires on 01/04/2022, is not for resale, is licensed for one-time use only, and may only be used in accordance with the AIA Contract Documents® Terms of Service. To report copyright violations, e-mail copyright@aia.org.
User Notes: (1986288177)

§ 3.4.2 Evaluations of the Work

§ 3.4.2.1 The Architect shall visit the site at intervals appropriate to the stage of construction, or as otherwise required in Section 4.2.2, to become generally familiar with the progress and quality of the portion of the Work completed, and to determine, in general, if the Work observed is being performed in a manner indicating that the Work, when fully completed, will be in accordance with the Contract Documents. However, the Architect shall not be required to make exhaustive or continuous on-site inspections to check the quality or quantity of the Work. On the basis of the site visits, the Architect shall keep the Owner reasonably informed about the progress and quality of the portion of the Work completed, and promptly report to the Owner (1) known deviations from the Contract Documents, (2) known deviations from the most recent construction schedule submitted by the Contractor, and (3) defects and deficiencies observed in the Work.

§ 3.4.2.2 The Architect has the authority to reject Work that does not conform to the Contract Documents and has the authority to require inspection or testing of the Work.

§ 3.4.2.3 The Architect shall interpret and decide matters concerning performance under, and requirements of, the Contract Documents on written request of either the Owner or Contractor. The Architect's response to such requests shall be made in writing within any time limits agreed upon or otherwise with reasonable promptness.

§ 3.4.2.4 When making such interpretations and decisions, the Architect shall endeavor to secure faithful performance by both Owner and Contractor, shall not show partiality to either, and shall not be liable for results of interpretations or decisions rendered in good faith.

§ 3.4.2.5 The Architect shall render initial decisions on Claims between the Owner and Contractor as provided in the Contract Documents.

§ 3.4.3 Certificates for Payment to Contractor

§ 3.4.3.1 The Architect shall review and certify the amounts due the Contractor and shall issue certificates in such amounts. The Architect's certification for payment shall constitute a representation to the Owner, based on the Architect's evaluation of the Work as provided in Section 3.4.2 and on the data comprising the Contractor's Application for Payment, that, to the best of the Architect's knowledge, information and belief, the Work has progressed to the point indicated, the quality of the Work is in accordance with the Contract Documents, and that the Contractor is entitled to payment in the amount certified.

§ 3.4.3.2 The issuance of a Certificate for Payment shall not be a representation that the Architect has (1) made exhaustive or continuous on-site inspections to check the quality or quantity of the Work, (2) reviewed construction means, methods, techniques, sequences or procedures, (3) reviewed copies of requisitions received from Subcontractors and suppliers and other data requested by the Owner to substantiate the Contractor's right to payment, or (4) ascertained how or for what purpose the Contractor has used money previously paid on account of the Contract Sum.

§ 3.4.4 Submittals

§ 3.4.4.1 The Architect shall review and approve, or take other appropriate action, upon the Contractor's submittals such as Shop Drawings, Product Data and Samples, but only for the limited purpose of checking for conformance with information given and the design concept expressed in the Contract Documents. Review of such submittals is not for the purpose of determining the accuracy and completeness of other information such as dimensions, quantities, and installation or performance of equipment or systems, which are the Contractor's responsibility. The Architect's review shall not constitute approval of safety precautions or any construction means, methods, techniques, sequences or procedures.

§ 3.4.4.2 If the Contract Documents specifically require the Contractor to provide professional design services or certifications by a design professional related to systems, materials or equipment, the Architect shall specify the appropriate performance and design criteria that such services must satisfy. The Architect shall review and take appropriate action on Shop Drawings and other submittals related to the Work designed or certified by the Contractor's design professional, provided the submittals bear such professional's seal and signature when submitted to the Architect. The review shall be for the limited purpose of checking for conformance with information given and the design concept expressed in the Contract Documents. The Architect shall be entitled to rely upon, and shall not be

AIA Document B104™ – 2017. Copyright © 1974, 1978, 1987, 1997, 2007 and 2017 by The American Institute of Architects. All rights reserved. The "American Institute of Architects," "AIA," the AIA Logo, and "AIA Contract Documents" are registered trademarks and may not be used without permission. This document was produced by AIA software at 15:41:37 ET on 06/01/2021 under Order No.9909046730 which expires on 01/04/2022, is not for resale, is licensed for one-time use only, and may only be used in accordance with the AIA Contract Documents® Terms of Service. To report copyright violations, e-mail copyright@aia.org.
User Notes: (1986288177)

responsible for, the adequacy and accuracy of the services, certifications, and approvals performed or provided by such design professionals.

§ 3.4.4.3 The Architect shall review and respond to written requests for information about the Contract Documents. The Architect's response to such requests shall be made in writing within any time limits agreed upon, or otherwise with reasonable promptness.

§ 3.4.5 Changes in the Work

The Architect may order minor changes in the Work that are consistent with the intent of the Contract Documents and do not involve an adjustment in the Contract Sum or an extension of the Contract Time. Subject to Section 4.2.3, the Architect shall prepare Change Orders and Construction Change Directives for the Owner's approval and execution in accordance with the Contract Documents.

§ 3.4.6 Project Completion

The Architect shall conduct inspections to determine the date or dates of Substantial Completion and the date of final completion; issue Certificates of Substantial Completion; forward to the Owner, for the Owner's review and records, written warranties and related documents required by the Contract Documents and received from the Contractor; and issue a final Certificate for Payment based upon a final inspection indicating that, to the best of the Architect's knowledge, information, and belief, the Work complies with the requirements of the Contract Documents.

ARTICLE 4 SUPPLEMENTAL AND ADDITIONAL SERVICES

§ 4.1 Supplemental Services are not included in Basic Services but may be required for the Project. The Architect shall provide the Supplemental Services indicated below, and the Owner shall compensate the Architect as provided in Section 11.2. Supplemental Services may include programming, site evaluation and planning, environmental studies, civil engineering, landscape design, telecommunications/data, security, measured drawings of existing conditions, coordination of separate contractors or independent consultants, detailed cost estimates, on-site project representation beyond requirements of Section 4.2.2, value analysis, interior architectural design, tenant related services, preparation of record drawings, commissioning, sustainable project services, and any other services not otherwise included in this Agreement. *(Identify below the Supplemental Services that the Architect is required to provide and insert a description of each Supplemental Service, if not further described in an exhibit attached to this document.)*

Civil Engineering
Topographic Survey
Landscape Design
Geotechnical Engineering

§ 4.2 The Architect may provide Additional Services after execution of this Agreement without invalidating the Agreement. Upon recognizing the need to perform Additional Services, the Architect shall notify the Owner. The Architect shall not provide the Additional Services until the Architect receives the Owner's written authorization. Except for services required due to the fault of the Architect, any Additional Services provided in accordance with this Section 4.2 shall entitle the Architect to compensation pursuant to Section 11.3.

§ 4.2.1 The Architect shall provide services necessitated by a change in the Initial Information, changes in previous instructions or approvals given by the Owner, or a material change in the Project including size; quality; complexity; the Owner's schedule or budget for Cost of the Work; or procurement or delivery method as an Additional Service.

§ 4.2.2 The Architect has included in Basic Services one (1) visit per month to the site by the Architect during construction.

§ 4.2.3 The Architect shall, as an Additional Service, provide services made necessary by a Contractor's proposed change in the Work. The Architect shall prepare revisions to the Architect's Instruments of Service necessitated by Change Orders and Construction Change Directives as an Additional Service.

§ 4.2.4 If the services covered by this Agreement have not been completed within sixteen (16) months of the date of this Agreement, through no fault of the Architect, extension of the Architect's services beyond that time shall be compensated as Additional Services.

Init.
/
AIA Document B104™ – 2017. Copyright © 1974, 1978, 1987, 1997, 2007 and 2017 by The American Institute of Architects. All rights reserved. The "American Institute of Architects," "AIA," the AIA Logo, and "AIA Contract Documents" are registered trademarks and may not be used without permission. This document was produced by AIA software at 15:41:37 ET on 06/01/2021 under Order No.9909046730 which expires on 01/04/2022, is not for resale, is licensed for one-time use only, and may only be used in accordance with the AIA Contract Documents® Terms of Service. To report copyright violations, e-mail copyright@aia.org.
User Notes: (1986288177)

ARTICLE 5 OWNER'S RESPONSIBILITIES

§ 5.1 Unless otherwise provided for under this Agreement, the Owner shall provide information in a timely manner regarding requirements for and limitations on the Project, including a written program which shall set forth the Owner's objectives, schedule, constraints and criteria, including space requirements and relationships, flexibility, expandability, special equipment, systems and site requirements.

§ 5.2 The Owner shall establish the Owner's budget for the Project, including (1) the budget for the Cost of the Work as defined in Section 6.1; (2) the Owner's other costs; and, (3) reasonable contingencies related to all of these costs. The Owner shall update the Owner's budget for the Project as necessary throughout the duration of the Project until final completion. If the Owner significantly increases or decreases the Owner's budget for the Cost of the Work, the Owner shall notify the Architect. The Owner and the Architect shall thereafter agree to a corresponding change in the Project's scope and quality.

§ 5.3 The Owner shall furnish surveys to describe physical characteristics, legal limitations and utility locations for the site of the Project; a written legal description of the site; and services of geotechnical engineers or other consultants, when the Architect requests such services and demonstrates that they are reasonably required by the scope of the Project.

§ 5.4 The Owner shall coordinate the services of its own consultants with those services provided by the Architect. Upon the Architect's request, the Owner shall furnish copies of the scope of services in the contracts between the Owner and the Owner's consultants. The Owner shall require that its consultants and contractors maintain insurance, including professional liability insurance, as appropriate to the services or work provided.

§ 5.5 The Owner shall furnish tests, inspections and reports required by law or the Contract Documents, such as structural, mechanical, and chemical tests; tests for air and water pollution; and tests for hazardous materials.

§ 5.6 The Owner shall furnish all legal, insurance and accounting services, including auditing services, that may be reasonably necessary at any time for the Project to meet the Owner's needs and interests.

§ 5.7 The Owner shall provide prompt written notice to the Architect if the Owner becomes aware of any fault or defect in the Project, including errors, omissions or inconsistencies in the Architect's Instruments of Service.

§ 5.8 The Owner shall endeavor to communicate with the Contractor through the Architect about matters arising out of or relating to the Contract Documents.

§ 5.9 The Owner shall provide the Architect access to the Project site prior to commencement of the Work and shall obligate the Contractor to provide the Architect access to the Work wherever it is in preparation or progress.

§ 5.10 Within 15 days after receipt of a written request from the Architect, the Owner shall furnish the requested information as necessary and relevant for the Architect to evaluate, give notice of, or enforce lien rights.

ARTICLE 6 COST OF THE WORK

§ 6.1 For purposes of this Agreement, the Cost of the Work shall be the total cost to the Owner to construct all elements of the Project designed or specified by the Architect and shall include contractors' general conditions costs, overhead and profit. The Cost of the Work also includes the reasonable value of labor, materials, and equipment, donated to, or otherwise furnished by, the Owner. The Cost of the Work does not include the compensation of the Architect; the costs of the land, rights-of-way, financing, or contingencies for changes in the Work; or other costs that are the responsibility of the Owner.

§ 6.2 The Owner's budget for the Cost of the Work is provided in Initial Information, and shall be adjusted throughout the Project as required under Sections 5.2, 6.4 and 6.5. Evaluations of the Owner's budget for the Cost of the Work, and the preliminary estimate of the Cost of the Work and updated estimates of the Cost of the Work prepared by the Architect, represent the Architect's judgment as a design professional. It is recognized, however, that neither the Architect nor the Owner has control over the cost of labor, materials or equipment; the Contractor's methods of determining bid prices; or competitive bidding, market or negotiating conditions. Accordingly, the Architect cannot

AIA Document B104™ – 2017. Copyright © 1974, 1978, 1987, 1997, 2007 and 2017 by The American Institute of Architects. All rights reserved. The "American Institute of Architects," "AIA," the AIA Logo, and "AIA Contract Documents" are registered trademarks and may not be used without permission. This document was produced by AIA software at 15:41:37 ET on 06/01/2021 under Order No.9909046730 which expires on 01/04/2022, is not for resale, is licensed for one-time use only, and may only be used in accordance with the AIA Contract Documents® Terms of Service. To report copyright violations, e-mail copyright@aia.org.
User Notes: (1986288177)

and does not warrant or represent that bids or negotiated prices will not vary from the Owner's budget for the Cost of the Work, or from any estimate of the Cost of the Work, or evaluation, prepared or agreed to by the Architect.

§ 6.3 In preparing estimates of the Cost of Work, the Architect shall be permitted to include contingencies for design, bidding and price escalation; to determine what materials, equipment, component systems and types of construction are to be included in the Contract Documents; to recommend reasonable adjustments in the program and scope of the Project; and to include design alternates as may be necessary to adjust the estimated Cost of the Work to meet the Owner's budget. The Architect's estimate of the Cost of the Work shall be based on current area, volume or similar conceptual estimating techniques. If the Owner requires a detailed estimate of the Cost of the Work, the Architect shall provide such an estimate, if identified as the Architect's responsibility in Section 4.1, as a Supplemental Service.

§ 6.4 If, through no fault of the Architect, construction procurement activities have not commenced within 90 days after the Architect submits the Construction Documents to the Owner the Owner's budget for the Cost of the Work shall be adjusted to reflect changes in the general level of prices in the applicable construction market.

§ 6.5 If at any time the Architect's estimate of the Cost of the Work exceeds the Owner's budget for the Cost of the Work, the Architect shall make appropriate recommendations to the Owner to adjust the Project's size, quality or budget for the Cost of the Work, and the Owner shall cooperate with the Architect in making such adjustments.

§ 6.6 If the Owner's current budget for the Cost of the Work at the conclusion of the Construction Documents Phase Services is exceeded by the lowest bona fide bid or negotiated proposal, the Owner shall

.1 give written approval of an increase in the budget for the Cost of the Work;
.2 authorize rebidding or renegotiating of the Project within a reasonable time;
.3 terminate in accordance with Section 9.5;
.4 in consultation with the Architect, revise the Project program, scope, or quality as required to reduce the Cost of the Work; or
.5 implement any other mutually acceptable alternative.

§ 6.7 If the Owner chooses to proceed under Section 6.6.4, the Architect shall modify the Construction Documents as necessary to comply with the Owner's budget for the Cost of the Work at the conclusion of the Construction Documents Phase Services, or the budget as adjusted under Section 6.6.1. If the Owner requires the Architect to modify the Construction Documents because the lowest bona fide bid or negotiated proposal exceeds the Owner's budget for the Cost of the Work due to market conditions the Architect could not reasonably anticipate, the Owner shall compensate the Architect for the modifications as an Additional Service pursuant to Section 11.3; otherwise the Architect's services shall be without additional compensation. In any event, the Architect's modification of the Construction Documents shall be the limit of the Architect's responsibility under this Article 6.

ARTICLE 7 COPYRIGHTS AND LICENSES

§ 7.1 The Architect and the Owner warrant that in transmitting Instruments of Service, or any other information, the transmitting party is the copyright owner of such information or has permission from the copyright owner to transmit such information for its use on the Project.

§ 7.2 The Architect and the Architect's consultants shall be deemed the authors and owners of their respective Instruments of Service, including the Drawings and Specifications, and shall retain all common law, statutory and other reserved rights, including copyrights. Submission or distribution of Instruments of Service to meet official regulatory requirements or for similar purposes in connection with the Project is not to be construed as publication in derogation of the reserved rights of the Architect and the Architect's consultants.

§ 7.3 The Architect grants to the Owner a nonexclusive license to use the Architect's Instruments of Service solely and exclusively for purposes of constructing, using, maintaining, altering and adding to the Project, provided that the Owner substantially performs its obligations under this Agreement, including prompt payment of all sums when due pursuant to Article 9 and Article 11. The Architect shall obtain similar nonexclusive licenses from the Architect's consultants consistent with this Agreement. The license granted under this section permits the Owner to authorize the Contractor, Subcontractors, Sub-subcontractors, and suppliers, as well as the Owner's consultants and separate contractors, to reproduce applicable portions of the Instruments of Service, subject to any protocols established pursuant to Section 1.3, solely and exclusively for use in performing services or construction for the Project. If the

AIA Document B104™ – 2017. Copyright © 1974, 1978, 1987, 1997, 2007 and 2017 by The American Institute of Architects. All rights reserved. The "American Institute of Architects," "AIA," the AIA Logo, and "AIA Contract Documents" are registered trademarks and may not be used without permission. This document was produced by AIA software at 15:41:37 ET on 06/01/2021 under Order No.9909046730 which expires on 01/04/2022, is not for resale, is licensed for one-time use only, and may only be used in accordance with the AIA Contract Documents® Terms of Service. To report copyright violations, e-mail copyright@aia.org.
User Notes: (1986288177)

Architect rightfully terminates this Agreement for cause as provided in Section 9.4, the license granted in this Section 7.3 shall terminate.

§ 7.3.1 In the event the Owner uses the Instruments of Service without retaining the authors of the Instruments of Service, the Owner releases the Architect and Architect's consultant(s) from all claims and causes of action arising from such uses. The Owner, to the extent permitted by law, further agrees to indemnify and hold harmless the Architect and its consultants from all costs and expenses, including the cost of defense, related to claims and causes of action asserted by any third person or entity to the extent such costs and expenses arise from the Owner's use of the Instruments of Service under this Section 7.3.1. The terms of this Section 7.3.1 shall not apply if the Owner rightfully terminates this Agreement for cause under Section 9.4.

§ 7.4 Except for the licenses granted in this Article 7, no other license or right shall be deemed granted or implied under this Agreement. The Owner shall not assign, delegate, sublicense, pledge or otherwise transfer any license granted herein to another party without the prior written agreement of the Architect. Any unauthorized use of the Instruments of Service shall be at the Owner's sole risk and without liability to the Architect and the Architect's consultants.

§ 7.5 Except as otherwise stated in Section 7.3, the provisions of this Article 7 shall survive the termination of this Agreement.

ARTICLE 8 CLAIMS AND DISPUTES

§ 8.1 General

§ 8.1.1 The Owner and Architect shall commence all claims and causes of action against the other and arising out of or related to this Agreement, whether in contract, tort, or otherwise, in accordance with the requirements of the binding dispute resolution method selected in this Agreement and within the period specified by applicable law, but in any case not more than 10 years after the date of Substantial Completion of the Work. The Owner and Architect waive all claims and causes of action not commenced in accordance with this Section 8.1.1.

§ 8.1.2 To the extent damages are covered by property insurance, the Owner and Architect waive all rights against each other and against the contractors, consultants, agents, and employees of the other, for damages, except such rights as they may have to the proceeds of such insurance as set forth in AIA Document A104–2017, Standard Abbreviated Form of Agreement Between Owner and Contractor. The Owner or the Architect, as appropriate, shall require of the contractors, consultants, agents, and employees of any of them, similar waivers in favor of the other parties enumerated herein.

§ 8.1.3 The Architect and Owner waive consequential damages for claims, disputes or other matters in question, arising out of or relating to this Agreement. This mutual waiver is applicable, without limitation, to all consequential damages due to either party's termination of this Agreement, except as specifically provided in Section 9.6.

§ 8.2 Mediation

§ 8.2.1 Any claim, dispute or other matter in question arising out of or related to this Agreement shall be subject to mediation as a condition precedent to binding dispute resolution. If such matter relates to or is the subject of a lien arising out of the Architect's services, the Architect may proceed in accordance with applicable law to comply with the lien notice or filing deadlines prior to resolution of the matter by mediation or by binding dispute resolution.

§ 8.2.2 Mediation, unless the parties mutually agree otherwise, shall be administered by the American Arbitration Association in accordance with its Construction Industry Mediation Procedures in effect on the date of this Agreement. The parties shall share the mediator's fee and any filing fees equally. The mediation shall be held in the place where the Project is located, unless another location is mutually agreed upon. Agreements reached in mediation shall be enforceable as settlement agreements in any court having jurisdiction thereof.

§ 8.2.3 If the parties do not resolve a dispute through mediation pursuant to this Section 8.2, the method of binding dispute resolution shall be the following:
(Check the appropriate box.)

[**X**] Arbitration pursuant to Section 8.3 of this Agreement

AIA Document B104™ – 2017. Copyright © 1974, 1978, 1987, 1997, 2007 and 2017 by The American Institute of Architects. All rights reserved. The "American Institute of Architects," "AIA," the AIA Logo, and "AIA Contract Documents" are registered trademarks and may not be used without permission. This document was produced by AIA software at 15:41:37 ET on 06/01/2021 under Order No.9909046730 which expires on 01/04/2022, is not for resale, is licensed for one-time use only, and may only be used in accordance with the AIA Contract Documents® Terms of Service. To report copyright violations, e-mail copyright@aia.org.
User Notes: (1986288177)

[ ] Litigation in a court of competent jurisdiction

[ ] Other: *(Specify)*

If the Owner and Architect do not select a method of binding dispute resolution, or do not subsequently agree in writing to a binding dispute resolution method other than litigation, the dispute will be resolved in a court of competent jurisdiction.

§ 8.3 Arbitration

§ 8.3.1 If the parties have selected arbitration as the method for binding dispute resolution in this Agreement, any claim, dispute or other matter in question arising out of or related to this Agreement subject to, but not resolved by, mediation shall be subject to arbitration which, unless the parties mutually agree otherwise, shall be administered by the American Arbitration Association in accordance with its Construction Industry Arbitration Rules in effect on the date of the Agreement.

§ 8.3.1.1 A demand for arbitration shall be made no earlier than concurrently with the filing of a request for mediation, but in no event shall it be made after the date when the institution of legal or equitable proceedings based on the claim, dispute or other matter in question would be barred by the applicable statute of limitations. For statute of limitations purposes, receipt of a written demand for arbitration by the person or entity administering the arbitration shall constitute the institution of legal or equitable proceedings based on the claim, dispute or other matter in question.

§ 8.3.2 The foregoing agreement to arbitrate, and other agreements to arbitrate with an additional person or entity duly consented to by parties to this Agreement, shall be specifically enforceable in accordance with applicable law in any court having jurisdiction thereof.

§ 8.3.3 The award rendered by the arbitrator(s) shall be final, and judgment may be entered upon it in accordance with applicable law in any court having jurisdiction thereof.

§ 8.3.4 Consolidation or Joinder

§ 8.3.4.1 Either party, at its sole discretion, may consolidate an arbitration conducted under this Agreement with any other arbitration to which it is a party provided that (1) the arbitration agreement governing the other arbitration permits consolidation; (2) the arbitrations to be consolidated substantially involve common questions of law or fact; and (3) the arbitrations employ materially similar procedural rules and methods for selecting arbitrator(s).

§ 8.3.4.2 Either party, at its sole discretion, may include by joinder persons or entities substantially involved in a common question of law or fact whose presence is required if complete relief is to be accorded in arbitration, provided that the party sought to be joined consents in writing to such joinder. Consent to arbitration involving an additional person or entity shall not constitute consent to arbitration of any claim, dispute or other matter in question not described in the written consent.

§ 8.3.4.3 The Owner and Architect grant to any person or entity made a party to an arbitration conducted under this Section 8.3, whether by joinder or consolidation, the same rights of joinder and consolidation as the Owner and Architect under this Agreement.

§ 8.4 The provisions of this Article 8 shall survive the termination of this Agreement.

ARTICLE 9 TERMINATION OR SUSPENSION

§ 9.1 If the Owner fails to make payments to the Architect in accordance with this Agreement, such failure shall be considered substantial nonperformance and cause for termination or, at the Architect's option, cause for suspension of performance of services under this Agreement. If the Architect elects to suspend services, the Architect shall give seven days' written notice to the Owner before suspending services. In the event of a suspension of services, the Architect shall have no liability to the Owner for delay or damage caused the Owner because of such suspension of services. Before resuming services, the Owner shall pay the Architect all sums due prior to suspension and any

AIA Document B104™ – 2017. Copyright © 1974, 1978, 1987, 1997, 2007 and 2017 by The American Institute of Architects. All rights reserved. The "American Institute of Architects," "AIA," the AIA Logo, and "AIA Contract Documents" are registered trademarks and may not be used without permission. This document was produced by AIA software at 15:41:37 ET on 06/01/2021 under Order No.9909046730 which expires on 01/04/2022, is not for resale, is licensed for one-time use only, and may only be used in accordance with the AIA Contract Documents® Terms of Service. To report copyright violations, e-mail copyright@aia.org.
User Notes: (1986288177)

expenses incurred in the interruption and resumption of the Architect's services. The Architect's fees for the remaining services and the time schedules shall be equitably adjusted.

§ 9.2 If the Owner suspends the Project, the Architect shall be compensated for services performed prior to notice of such suspension. When the Project is resumed, the Architect shall be compensated for expenses incurred in the interruption and resumption of the Architect's services. The Architect's fees for the remaining services and the time schedules shall be equitably adjusted.

§ 9.3 If the Owner suspends the Project for more than 90 cumulative days for reasons other than the fault of the Architect, the Architect may terminate this Agreement by giving not less than seven days' written notice.

§ 9.4 Either party may terminate this Agreement upon not less than seven days' written notice should the other party fail substantially to perform in accordance with the terms of this Agreement through no fault of the party initiating the termination.

§ 9.5 The Owner may terminate this Agreement upon not less than seven days' written notice to the Architect for the Owner's convenience and without cause.

§ 9.6 In the event of termination not the fault of the Architect, the Architect shall be compensated for services performed prior to termination, Reimbursable Expenses incurred, and all costs attributable to termination, including the costs attributable to the Architect's termination of consultant agreements.

§ 9.7 In addition to any amounts paid under Section 9.6, if the Owner terminates this Agreement for its convenience pursuant to Section 9.5, or the Architect terminates this Agreement pursuant to Section 9.3, the Owner shall pay to the Architect the following fees:
(Set forth below the amount of any termination or licensing fee, or the method for determining any termination or licensing fee.)

.1 Termination Fee:

N/A

.2 Licensing Fee if the Owner intends to continue using the Architect's Instruments of Service:

N/A

§ 9.8 Except as otherwise expressly provided herein, this Agreement shall terminate one year from the date of Substantial Completion.

ARTICLE 10 MISCELLANEOUS PROVISIONS

§ 10.1 This Agreement shall be governed by the law of the place where the Project is located excluding that jurisdiction's choice of law rules. If the parties have selected arbitration as the method of binding dispute resolution, the Federal Arbitration Act shall govern Section 8.3.

§ 10.2 Terms in this Agreement shall have the same meaning as those in AIA Document A104–2017, Standard Abbreviated Form of Agreement Between Owner and Contractor.

§ 10.3 The Owner and Architect, respectively, bind themselves, their agents, successors, assigns and legal representatives to this Agreement. Neither the Owner nor the Architect shall assign this Agreement without the written consent of the other, except that the Owner may assign this Agreement to a lender providing financing for the Project if the lender agrees to assume the Owner's rights and obligations under this Agreement, including any payments due to the Architect by the Owner prior to the assignment.

§ 10.4 If the Owner requests the Architect to execute certificates or consents, the proposed language of such certificates or consents shall be submitted to the Architect for review at least 14 days prior to the requested dates of

AIA Document B104™ – 2017. Copyright © 1974, 1978, 1987, 1997, 2007 and 2017 by The American Institute of Architects. All rights reserved. The "American Institute of Architects," "AIA," the AIA Logo, and "AIA Contract Documents" are registered trademarks and may not be used without permission. This document was produced by AIA software at 15:41:37 ET on 06/01/2021 under Order No.9909046730 which expires on 01/04/2022, is not for resale, is licensed for one-time use only, and may only be used in accordance with the AIA Contract Documents® Terms of Service. To report copyright violations, e-mail copyright@aia.org.
User Notes: (1986288177)

execution. The Architect shall not be required to execute certificates or consents that would require knowledge, services or responsibilities beyond the scope of this Agreement.

§ 10.5 Nothing contained in this Agreement shall create a contractual relationship with, or a cause of action in favor of, a third party against either the Owner or Architect.

§ 10.6 The Architect shall have no responsibility for the discovery, presence, handling, removal or disposal of, or exposure of persons to, hazardous materials or toxic substances in any form at the Project site.

§ 10.7 The Architect shall have the right to include photographic or artistic representations of the design of the Project among the Architect's promotional and professional materials. However, the Architect's materials shall not include information the Owner has identified in writing as confidential or proprietary. The Owner shall provide professional credit for the Architect in the Owner's promotional materials for the Project. This Section 10.7 shall survive the termination of this Agreement unless the Owner terminates this Agreement for cause pursuant to Section 9.4.

§ 10.8 The invalidity of any provision of the Agreement shall not invalidate the Agreement or its remaining provisions. If it is determined that any provision of the Agreement violates any law, or is otherwise invalid or unenforceable, then that provision shall be revised to the extent necessary to make that provision legal and enforceable. In such case the Agreement shall be construed, to the fullest extent permitted by law, to give effect to the parties' intentions and purposes in executing the Agreement.

ARTICLE 11 COMPENSATION

§ 11.1 For the Architect's Basic Services described under Article 3, the Owner shall compensate the Architect as follows:

.1 Stipulated Sum
(Insert amount)

.2 Percentage Basis
(Insert percentage value)

Seven and one-quarter percent (7.25) % of the Owner's budget for the Cost of the Work, as calculated in accordance with Section 11.6., until a lowest bona fide bid or construction sum is determined. Once established, contract increases may occur.

.3 Other
(Describe the method of compensation)

§ 11.2 For Supplemental Services identified in Section 4.1, the Owner shall compensate the Architect as follows:
(Insert amount of, or basis for, compensation. If necessary, list specific services to which particular methods of compensation apply.)

Compensation shall be the actual amount invoiced to the Architect plus ten percent (10%).

§ 11.3 For Additional Services that may arise during the course of the Project, including those under Section 4.2, the Owner shall compensate the Architect as follows:
(Insert amount of, or basis for, compensation.)

Additional services will be billed in accordance with the Architect's hourly rates as defined in Section 11.7, or as negotiated and agreed upon by both parties.

AIA Document B104™ – 2017. Copyright © 1974, 1978, 1987, 1997, 2007 and 2017 by The American Institute of Architects. All rights reserved. The "American Institute of Architects," "AIA," the AIA Logo, and "AIA Contract Documents" are registered trademarks and may not be used without permission. This document was produced by AIA software at 15:41:37 ET on 06/01/2021 under Order No.9909046730 which expires on 01/04/2022, is not for resale, is licensed for one-time use only, and may only be used in accordance with the AIA Contract Documents® Terms of Service. To report copyright violations, e-mail copyright@aia.org.
User Notes: (1986288177)

§ 11.4 Compensation for Supplemental and Additional Services of the Architect's consultants when not included in Section 11.2 or 11.3, shall be the amount invoiced to the Architect plus ten percent (10 %), or as follows:

§ 11.5 Where compensation for Basic Services is based on a stipulated sum or percentage of the Cost of the Work, the compensation for each phase of services shall be as follows:

Schematic Design Phase	Twenty Five	percent (	25	%)
Design Development Phase	Twenty	percent (	20	%)
Construction Documents Phase	Forty	percent (	40	%)
Procurement Phase	Five	percent (	5	%)
Construction Phase	Ten	percent (	10	%)
Total Basic Compensation	one hundred	percent (	100	%)

§ 11.6 When compensation identified in Section 11.1 is on a percentage basis, progress payments for each phase of Basic Services shall be calculated by multiplying the percentages identified in this Article by the Owner's most recent budget for the Cost of the Work.

§ 11.6.1 When compensation is on a percentage basis and any portions of the Project are deleted or otherwise not constructed, compensation for those portions of the Project shall be payable to the extent services are performed on those portions. The Architect shall be entitled to compensation in accordance with this Agreement for all services performed whether or not the Construction Phase is commenced.

§ 11.7 The hourly billing rates for services of the Architect and the Architect's consultants, if any, are set forth below. The rates shall be adjusted in accordance with the Architect's and Architect's consultants' normal review practices. *(If applicable, attach an exhibit of hourly billing rates or insert them below.)*

Employee or Category	Rate, per Hour
Principal / Owner	$195
Director	$185
Principal	$180
Associate	$165
Architect	$150
Intern Architect	$125
Interior Designer	$130
Construction Analyst	$120
Administrative Assistant / Clerical	$95

§ 11.8 Compensation for Reimbursable Expenses

§ 11.8.1 Reimbursable Expenses are in addition to compensation for Basic, Supplemental, and Additional Services and include expenses incurred by the Architect and the Architect's consultants directly related to the Project, as follows:

.1 Transportation and authorized out-of-town travel and subsistence;
.2 Long distance services, dedicated data and communication services, teleconferences, Project web sites, and extranets;
.3 Permitting and other fees required by authorities having jurisdiction over the Project;
.4 Printing, reproductions, plots, and standard form documents;
.5 Postage, handling, and delivery;
.6 Expense of overtime work requiring higher than regular rates if authorized in advance by the Owner;
.7 Renderings, physical models, mock-ups, professional photography, and presentation materials requested by the Owner or required for the Project;

AIA Document B104™ – 2017. Copyright © 1974, 1978, 1987, 1997, 2007 and 2017 by The American Institute of Architects. All rights reserved. The "American Institute of Architects," "AIA," the AIA Logo, and "AIA Contract Documents" are registered trademarks and may not be used without permission. This document was produced by AIA software at 15:41:37 ET on 06/01/2021 under Order No.9909046730 which expires on 01/04/2022, is not for resale, is licensed for one-time use only, and may only be used in accordance with the AIA Contract Documents® Terms of Service. To report copyright violations, e-mail copyright@aia.org.
User Notes: (1986288177)

.8 Expense of professional liability insurance dedicated exclusively to this Project or the expense of additional insurance coverage or limits requested by the Owner in excess of that normally maintained by the Architect and the Architect's consultants;
.9 All taxes levied on professional services and on reimbursable expenses;
.10 Site office expenses; and
.11 Other similar Project-related expenditures.

§ 11.8.2 For Reimbursable Expenses the compensation shall be the expenses incurred by the Architect and the Architect's consultants plus ten percent (10 %) of the expenses incurred.

§ 11.9 Payments to the Architect
§ 11.9.1 Initial Payment
An initial payment of zero ($ 0) shall be made upon execution of this Agreement and is the minimum payment under this Agreement. It shall be credited to the Owner's account in the final invoice.

§ 11.9.2 Progress Payments
§ 11.9.2.1 Unless otherwise agreed, payments for services shall be made monthly in proportion to services performed. Payments are due and payable upon presentation of the Architect's invoice. Amounts unpaid sixty (60) days after the invoice date shall bear interest at the rate entered below, or in the absence thereof at the legal rate prevailing from time to time at the principal place of business of the Architect.
(Paragraphs deleted)

§ 11.9.2.2 The Owner shall not withhold amounts from the Architect's compensation to impose a penalty or liquidated damages on the Architect, or to offset sums requested by or paid to contractors for the cost of changes in the Work unless the Architect agrees or has been found liable for the amounts in a binding dispute resolution proceeding.

§ 11.9.2.3 Records of Reimbursable Expenses, expenses pertaining to Additional Services, and services performed on the basis of hourly rates shall be available to the Owner at mutually convenient times.

ARTICLE 12 SPECIAL TERMS AND CONDITIONS
Special terms and conditions that modify this Agreement are as follows:
(Include other terms and conditions applicable to this Agreement.)

N/A

ARTICLE 13 SCOPE OF THE AGREEMENT
§ 13.1 This Agreement represents the entire and integrated agreement between the Owner and the Architect and supersedes all prior negotiations, representations or agreements, either written or oral. This Agreement may be amended only by written instrument signed by both the Owner and Architect.

§ 13.2 This Agreement is comprised of the following documents identified below:
.1 AIA Document B104™–2017, Standard Abbreviated Form of Agreement Between Owner and Architect

(Paragraphs deleted)
This Agreement entered into as of the day and year first written above.

OWNER *(Signature)*	ARCHITECT *(Signature)*
	H.F. Brown, IV, AIA, LEED AP, Vice President
(Printed name and title)	*(Printed name, title, and license number, if required)*

Init. /

AIA Document B104™ – 2017. Copyright © 1974, 1978, 1987, 1997, 2007 and 2017 by The American Institute of Architects. All rights reserved. The "American Institute of Architects," "AIA," the AIA Logo, and "AIA Contract Documents" are registered trademarks and may not be used without permission. This document was produced by AIA software at 16:47:01 ET on 08/19/2020 under Order No.0400451530 which expires on 01/02/2021, is not for resale, is licensed for one-time use only, and may only be used in accordance with the AIA Contract Documents® Terms of Service. To report copyright violations, e-mail copyright@aia.org.
User Notes: (1398167364)

RESOLUTION NO. _____

A RESOLUTION AUTHORIZING THE MAYOR AND CLERK TO ENTER INTO AN AGREEMENT WITH JACKSON, BROWN, AND PALCULICT (JBP) ARCHIETECTS TO DESIGN AN ADDITION TO THE FIRE STATION 3.

WHEREAS, with the increase of staffing, Station 3 needs an addition to the structure including individual bedrooms and updating. Station 3 was opened in 1996.

WHEREAS, JBP is doing the design work for 7.25% of the construction cost, estimated cost of construction is $750,000.00.

NOW, THEREFORE, BE IT RESOLVED BY THE CITY COUNCIL FOR THE CITY OF BENTONVILLE, ARKANSAS.

Section 1: That the Mayor and Clerk be and are hereby authorized to enter into an Agreement with Jackson, Brown, and Palculict (JBP) Architects to design an addition to the Fire Station 3, as set forth in the agreement attached hereto as Exhibit "A".

Section 2: This resolution shall be in full force and effect from and after the date of its passage.

PASSED and APPROVED this _____ day of _____, 2021.

APPROVED:

_____
MAYOR

ATTEST:

_____
CITY CLERK

Agenda Item Form

Date of City Council Meeting	**6/22/2021**
Department	**Fire**
Submitted by	**Brent Boydston**
Phone	**(479) 271-3151**

Item Type: (*Check Applicable Item Type*)					
☐ Budget Adjustment	☐ Change Order	☐ Informational	☐ Ordinance	☑ Resolution	☐ Bid Award

Recommendation/Suggested Action *(Enter recommendation in space below):*

Resolution authorizing the Mayor and City Clerk to enter in to a contract with Morrison Shipley for the civil engineering services for Station 3 building addition. Fire Department personnel chose Morrison Shipley after reviewing RFQ's on file with the City. Morrison Shipley was selected using the City's standard SOQ selection process for professional services in accordance with state law.

Estimated Cost	**$22,800.00**
Is this Item Budgeted?	☑ Yes ☐ No

If no, please explain how item will be funded *(briefly explain in space below)* **:**

Inter-office Memorandum

To: Mayor Orman and City Council

From: Brent Boydston, Fire Chief

CC: Camille Thompson, Staff Attorney, Gladys Shoemake, Purchasing Manager, Jake Harper, Finance Director

Date: June 22, 2021

Re: Civil Engineer for the Station 3 addition.

With the increase of staffing, Station 3 needs an addition to be added to the existing structure, to accommodate the increase in staff. The addition will include individual bedrooms and some updating. This station was opened in 1996.

Fire Department personnel (Selection Committee) reviewed SOQs for civil engineers and chose Morrison Shipley for the civil engineering services. Morrison Shipley has submitted a contract for $17,800.00 + reimbursables.

MORRISON SHIPLEY

June 9, 2021

Chief Brent Boydston
City of Bentonville
800 S.W. "A" Street
Bentonville, AR. 72712
(479) 271-5927, Office
bboydston@bentonvillear.com

RE: Proposal for Civil Engineering or Land Surveying Services
Fire Station #3 Addition
Bentonville, Arkansas

Dear Chief Boydston:

At your request, Morrison-Shipley Engineers, Inc. (MSE) is providing this Proposal for civil engineering and land surveying services for the referenced project.

PROJECT UNDERSTANDING

MSE understands that you desire for us to provide civil engineering and land surveying services for the building addition on Fire Station #3 located at NW 13 Street and NW J Street. Based on our correspondence, we understand the following regarding the project's fact and objectives:

1. The department will be expanding the station with an addition on the west side of the building and will utilize the existing water and sanitary services.
2. Platting of the property and additional Right-of-Way or easement dedications will be required.
3. There will be no modifications to the existing parking lot or driveways.
4. Additional landscaping will be required.

5. Stormwater detention will not be required due to the minimal increase in impervious area.
6. There will be no public infrastructure improvements associated with this addition and MSE's construction phase services will be minimal.
7. MSE will not prepare material specifications and/or Contract documents except for the information provided on our Civil plans.

If any of our understandings are incorrect or require clarification, please contact us immediately so we can revise this Proposal.

SCOPE OF SERVICES

MSE will provide the following services under this Proposal:

1. Boundary and Topographic Field Data Collection for use during design.
2. Concept phase services, including attending meetings with you and your Architect, and prepare project layout plans as directed by you.
3. Replat of the property to dedicate R/W as required.
4. Site Development Plans prepared to City's large-scale development standards, including drainage study, site grading and drainage plans, landscape plan meeting City's minimum requirements, submitting to and gaining City approval, and lastly preparing the Issued for Construction plan set.
5. Construction phase services to include, periodic construction observation, and addressing contractor RFIs.
6. Record Drawings and Site certifications.

Any services not listed above or that are excluded below will be considered Additional Services. All Additional Services shall be authorized in writing, and same will be billed on an hourly basis in accordance with the attached Schedule of Hourly Billing Rates for the amount of time expended.

EXCLUSIONS

MSE specifically EXCLUDES the items listed below from this Proposal. **Please read these carefully since some of these may be required to complete the project.**

1. Boundary, Lot Split, ALTA, or other types of Survey Documents except for the replat noted above.
2. Variances or Conditional Use Requests.
3. Re-design due to scope changes, value engineering, budget overruns, or other reasons.
4. Fire protection systems.
5. Traffic Study.
6. Site lighting design.
7. Offsite road, drainage, water, and/or sewer improvements.
8. Construction materials testing.
9. Construction staking.
10. Preparation of SWPPP and/or oversight, implementation, monitoring, reporting, and implementation of SW3P measures during construction, including all fees associated therewith.
11. Technical specifications not provided on our Civil Plans.
12. Preparation of franchise utility easement plats, including staking of franchise utilities.
13. Acquisition of off-site easements and rights-of-way.
14. Structural design, including site retaining walls greater than four (4) feet in height.
15. Review and permitting fees.
16. Management of other members of the design team.

FEES

MSE shall be paid the following fees for items listed in the Scope of Services:

Boundary/Topo Field Data:	$ 2,800.00 billed Lump Sum
Concept Phase Services:	$ 2,000.00 (Hourly Budget)
Property Replat:	$ 1,500.00 billed Lump Sum
Site Development Plans:	$ 8,500.00 billed Lump Sum
Construction Phase Services:	$ 1,500.00 (Hourly Budget)
Record Drawings:	$ 1,500.00 billed Lump Sum
Reimbursable Expenses:	Billed at MSE's cost +10%

TERMS

Morrison-Shipley will invoice for our services by email on or about the first day of each month. No paper copies of our invoices will be issued. Payment terms are **NET 30 DAYS from the invoice date**.

This Proposal, when executed by both parties, along with the noted attachments is the Contract between us for the services that MSE will provide on the project. This Contract will remain in force unless it is modified in writing and agreed to by both parties or terminated under the provisions listed in the attached Terms and Conditions. If you plan to issue a purchase order or substitute another contract form, such shall subject to our approval, and this Proposal shall be attached in full therewith. If there are discrepancies between the terms noted in MSE's Proposal and your contract document, the terms of this Proposal shall govern.

PROJECT SCHEDULE

MSE will work with you to develop a mutually acceptable project schedule after we receive an executed version of this Proposal from you. MSE schedules its services on a first-authorized, first-served basis, so any delays in your execution of this Proposal could create delays for MSE starting our work.

If you have any questions regarding this Proposal, or if you wish to schedule the work, you can reach me at (479) 273-2209.

Sincerely,

Morrison-Shipley Engineers, Inc.

Arkansas COA #281

[redacted]

John Wary, PE
Principal

This Proposal is accepted by:

Chief Brent Boydston Date

Attachments: Schedule of Hourly Billing Rates
Terms and Conditions

MORRISON SHIPLEY

SCHEDULE OF HOURLY BILLING RATES (AR)

(Effective January 5, 2021)

Principal Engineer	$ 200.00/Hour
Senior Project Manager	$ 150.00/Hour
Project Manager	$ 130.00/Hour
Project Engineer (P.E.)	$ 120.00/Hour
Project Engineer (E.I.)	$ 100.00/Hour
Engineering Technician	$ 75.00/Hour
Landscape Architect (P.L.A.)	$ 135.00/Hour
CAD Senior Designer	$ 115.00/Hour
CAD Designer	$ 95.00/Hour
CAD Technician	$ 75.00/Hour
Professional Surveyor (P.S.)	$ 125.00/Hour
Survey Coordinator	$ 100.00/Hour
Survey Intern (S.I.)	$ 85.00/Hour
Survey Crew Chief	$ 85.00/Hour
Survey Rodman	$ 75.00/Hour
Survey Technician	$ 75.00/Hour
Survey Field Crew (1-person)	$ 125.00/Hour
Survey Field Crew (2-person)	$ 160.00/Hour
Survey Field Crew (3-person)	$ 185.00/Hour
3D Laser Scanning Field Crew (1-Person)	$ 225.00/Hour
3D Laser Scanning Manager	$ 130.00/Hour
3D Laser Scanning Technician	$ 85.00/Hour
BIM Manager	$ 130.00/Hour
BIM Designer	$ 100.00/Hour
BIM Technician	$ 85.00/Hour

Ground Penetrating Radar Field Crew	$ 185.00/Hour
Aerial Mapping Manager – Field *(Flight Ops)*	$ 200.00/Hour
Aerial Mapping Manager – Office *(Travel Time/Data Processing)*	$ 100.00/Hour
Aerial Mapping Technician	$ 85.00/Hour
Senior Construction Observer	$ 105.00/Hour
Construction Observer	$ 90.00/Hour
Administrative Assistant	$ 50.00/Hour

EXPENSES

Mileage & Per Diem:	IRS-allowed rates
Reimbursable Expenses:	Cost + 10%

PRINTING

8.5x11:	$0.16/EA B&W	$0.75/EA Color
8.5x14:	$0.22/EA B&W	$0.95/EA Color
11x17:	$0.32/EA B&W	$2.01/EA Color
Custom:	$0.40/SF B&W	$1.55/SF Color

BILLING TERMS

1. Hourly charges will be billed in 0.25-hour minimum increments. Some services may be subject to minimum charges.

2. Hourly rates include charges for personnel, equipment, and supplies, but do not include vehicle mileage charges and per diem.

3. Travel time and mileage will be billed portal to portal from MSE's office.

4. Work requested between the hours of 7:00 PM and 6:00 AM and on Saturdays, Sundays, or holidays will be charged at 125% of the noted rates.

5. Services rendered for legal proceedings, including pre-trial hearings, depositions, expert report preparation, and trial testimony, etc. will be charged at 200% of the noted rates.

TERMS AND CONDITIONS

ADDITIONAL SERVICES

Any service(s) not listed in MSE's Scope of Services will be considered Additional Services. All Additional Services, when requested, shall be authorized in writing by the Client prior to MSE proceeding with any work.

Revisions to the project scope requested by the Client which occur after MSE has been authorized to start its work, including modifications necessitated by operational or budget issues, value engineering, etc., will be considered Additional Services, and MSE's time required to make revisions to the site layout will be billed in addition to the stated fees in this agreement.

The Client shall pay MSE for all Additional Services an amount equal to the cumulative hours charged to the Project by each class of MSE's employees multiplied by the billing rate for each applicable billing class in accordance with the Schedule of Hourly Billing Rates, plus reimbursable expenses and fees charged by MSE's subconsultants.

ASSIGNMENT

Neither party to this Agreement shall transfer, sublet or assign any rights or duties under or interest in this Agreement, including but not limited to monies that are due or monies that may be due, without the prior written consent of the other party. Subcontracting to subconsultants, normally contemplated by MSE as a generally accepted business practice, shall not be considered an assignment for purposes of this Agreement.

BETTERMENT

If, due to MSE's negligence, a required item or component of the Project is omitted from MSE's construction documents, MSE shall not be responsible for paying the cost required to add such item or component to the extent that such item or component would have been required and included in the original construction documents. In no event will MSE be responsible for any cost or expense that provides betterment or upgrades or enhances the value of the Project.

CERTIFICATIONS, GUARANTEES AND WARRANTIES

MSE shall not be required to sign any documents, no matter by whom requested, that would result in MSE's having to certify, guarantee, or warrant the existence of conditions whose existence MSE cannot ascertain. The Client also agrees not to make resolution of any dispute with MSE or payment of any amount due to MSE in any way contingent upon MSE's signing any such certification. As used herein, the word "certify" shall mean an expression of MSE's professional opinion to the best of its information, knowledge and belief, and does not constitute a warranty or guarantee by MSE.

CHANGED CONDITIONS

If, during the term of this Agreement, circumstances or conditions that were not originally contemplated by or known to MSE are revealed, to the extent that they affect the scope of services, compensation, schedule, allocation of risks, or other material terms of this Agreement, MSE may call for renegotiation of appropriate portions of this Agreement. MSE shall notify the Client of the changed conditions necessitating renegotiation, and MSE and the Client shall promptly and in good faith enter into renegotiation of this Agreement to address the changed conditions. If terms cannot be agreed to, the parties agree that either party has the absolute right to terminate this Agreement in accordance with the Termination provision herein.

CHANGES IN THE WORK

MSE shall prepare Change Orders and Construction Change Directives for the Owner's approval and execution in accordance with the Contract Documents, and may authorize minor changes in the Work not involving an adjustment in the Contract Sum or an extension of the Contract Time, which are not inconsistent with the intent of

the Contract Documents. Preparing Change Orders and Construction Change Directives that require evaluation of Contractor's proposals and supporting data, or the preparation or revision of Instruments of Service shall be considered as Additional Services, and the Client will pay MSE for these services in accordance with the Additional Services provisions of this Agreement.

CONFIDENTIALITY

MSE agrees to keep confidential and not to disclose to any person or entity, other than MSE's employees, subconsultants, and the general contractor and subcontractors, if appropriate, any data or information not previously known to and generated by MSE or furnished to MSE and marked CONFIDENTIAL by the Client. These provisions shall not apply to information in whatever form that is in the public domain, nor shall they restrict MSE from giving notices required by law or complying with an order to provide information or data when such an order is issued by a court, administrative agency or other legitimate authority, or if disclosure is reasonably necessary for MSE to defend itself from any legal action or claim.

CONSEQUENTIAL DAMAGES

Notwithstanding any other provision of this Agreement, and to the fullest extent permitted by law, neither the Client nor MSE, their respective officers, directors, partners, employees, contractors, or subconsultants shall be liable to the other or shall make any claim for any incidental, indirect or consequential damages arising out of or connected in any way to the Project or to this Agreement. This mutual waiver of consequential damages shall include, but is not limited to, loss of use, loss of profit, loss of business, loss of income, loss of reputation and any other consequential damages that either party may have incurred from any cause of action including negligence, strict liability, breach of contract and breach of strict or implied warranty. Both the Client and MSE shall require similar waivers of consequential damages protecting all the entities or persons named herein in all contracts and subcontracts with others involved in this project.

CONSTRUCTION OBSERVATION

If included in the Scope of Services of this Agreement, MSE shall visit the site at intervals appropriate to the stage of construction, or as otherwise agreed to in writing by the Client and MSE, in order to observe the progress and quality of the work completed by the Contractor. Such visits and observation are not intended to be an exhaustive check or a detailed inspection of the Contractor's work but rather are to allow MSE to become generally familiar with the work in progress and to determine, in general, if the work is proceeding in accordance with the Contract Documents. Based on this general observation, MSE shall keep the Client informed about the progress of the Work and shall advise the Client about observed deficiencies in the Work.

If the Client desires more extensive project observation or full-time project representation, the Client shall request that such services be provided by MSE as Additional Services in accordance with the terms of this Agreement.

MSE shall not supervise, direct, or have control over the Contractor's work nor have authority over any responsibility for the construction means, methods, techniques, sequences, or procedures selected by the Contractor nor for the Contractor's safety precautions or programs in connection with the Project. These rights and responsibilities are solely those of the Contractor in accordance with Contractor's contract with the Client.

MSE shall not be responsible for any acts or omissions of the Contractor, any subcontractor, any entity performing any portions of the Work or any agents or employees of any of them or for any decision made on interpretations or clarifications of the construction contract given by Client without consultation and advice of MSE.

MSE does not guarantee the performance of the Contractor and shall not be responsible for the Contractor's failure to perform its work in accordance with the Contractor's contract with the Client or any applicable laws, codes, rules, or regulations.

DESIGN WITHOUT CONSTRUCTION OBSERVATION

Unless Construction Observation is specifically noted in MSE's Scope of Services, it is understood and agreed that MSE's services do NOT include Construction Observation nor review of the Contractor's performance or any other construction phase services, and that such services will be provided by the Client. As such, the Client assumes all responsibility for interpretation of the Contract Documents and for Construction Observation, and the Client waives any claims against MSE that may be in any way connected thereto, including claims resulting from unauthorized modifications to the construction plans and construction errors or omissions.

In addition, the Client agrees, to the fullest extent permitted by law, to indemnify and hold harmless MSE, its officers, directors, employees, and subconsultants (collectively, MSE) against all damages, liabilities, or costs, including reasonable attorneys' fees and defense costs, arising out of or in any way connected with the performance of such services by other persons or entities and from any and all claims arising from modifications, clarifications, interpretations, adjustments, or other modifications made to the Contract Documents to reflect changed field or other conditions.

DISPUTE RESOLUTION

In an effort to resolve any conflicts that arise during the design and construction of the Project or following the completion of the Project, the Client and MSE agree that all disputes between them arising out of or relating to this Agreement or the Project shall first be submitted to non-binding mediation, unless the parties mutually agree otherwise.

The Client and MSE further agree to include a similar mediation provision in all agreements with independent contractors and subconsultants retained for the Project and to require all independent contractors and subconsultants also to include a similar mediation provision in all agreements with their subcontractors, subconsultants, suppliers and fabricators, thereby providing for mediation as the primary method for dispute resolution between the parties to all those agreements.

ELECTRONIC FILES

In accepting and utilizing any drawings, reports and data on any form of electronic media generated and furnished by MSE, the Client agrees that all such electronic files are instruments of service of MSE, who shall be deemed the author, and shall retain all common law, statutory law and other rights, without limitation, including copyrights.
The Client agrees not to reuse these electronic files, in whole or in part, for any purpose other than for the Project. The Client agrees not to transfer these electronic files to others without the prior written consent of MSE. The Client further agrees that MSE shall have no responsibility or liability to Client or others for any changes made by anyone other than MSE or for any reuse of the electronic files without the prior written consent of MSE.

In addition, the Client agrees, to the fullest extent permitted by law, to indemnify and hold harmless MSE, its officers, directors, employees and subconsultants (collectively, MSE) against all damages, liabilities or costs, including reasonable attorneys' fees and defense costs, arising from any changes made by anyone other than MSE or from any use or reuse of the electronic files without the prior written consent of MSE.

Under no circumstances shall delivery of electronic files for use by the Client be deemed a sale by MSE, and MSE makes no warranties, either express or implied, of merchantability and fitness for any particular purpose. In no event shall MSE be liable for indirect or consequential damages as a result of the Client's unauthorized use or reuse of the electronic files.

The Client is aware that differences may exist between the electronic files delivered and the printed hard-copy construction documents. In the event of a conflict between the signed construction documents prepared by MSE and electronic files, the signed or sealed hard-copy construction documents shall govern.

GOVERNING LAW AND JURISDICTION

The Client and MSE agree that this Agreement and any legal actions concerning its validity, interpretation, and performance shall be governed by the laws of the State of Arkansas without regard to any conflict of laws provisions, which may apply the laws of other jurisdictions. It is further agreed that any legal action between the Client and MSE arising out of this Agreement or the performance of the services shall be brought in a court of competent jurisdiction in Benton County, Arkansas.

HAZARDOUS MATERIALS

Both parties acknowledge that MSE's scope of services does not include any services related to the presence of any hazardous or toxic materials. In the event MSE or any other person or entity involved in the project encounters any hazardous or toxic materials, or should it become known to MSE that such materials may be present on or about the jobsite or any adjacent areas that may affect the performance of MSE's services, MSE may, at its sole option and without liability for consequential or any other damages, suspend performance of its services under this Agreement until the Client retains appropriate qualified consultants and/or contractors to identify and abate or remove the hazardous or toxic materials and warrants that the jobsite is in full compliance with all applicable laws and regulations.

As used in this Agreement, the term "Hazardous Materials" shall mean any substances, including without limitation asbestos, toxic or hazardous waste, PCBs, combustible gases and materials, petroleum or radioactive materials (as each of these is defined in applicable federal statutes) or any other substances under any conditions and in such quantities as would pose a substantial danger to persons or property exposed to such substances at or near the Project site.

INDEMNIFICATION

MSE agrees, to the fullest extent permitted by law, to indemnify and hold harmless the Client, its officers, directors, and employees (collectively, Client) against all damages, liabilities or costs, including reasonable attorneys' fees and defense costs, to the extent caused by MSE's negligent performance of professional services under this Agreement and that of its subconsultants or anyone for whom MSE is legally liable.

The Client agrees, to the fullest extent permitted by law, to indemnify and hold harmless MSE, its officers, directors, employees, and subconsultants (collectively, MSE) against all damages, liabilities or costs, including reasonable attorneys' fees and defense costs, to the extent caused by the Client's negligent acts in connection with the Project and the acts of its contractors, subcontractors or consultants or anyone for whom the Client is legally liable. Nothing contained herein shall be construed as a waiver of immunity by Client.

Neither the Client nor MSE shall be obligated to indemnify the other party in any manner whatsoever for the other party's own negligence or for the negligence of others.

INFORMATION PROVIDED BY OTHERS

The Client shall furnish, at the Client's expense, all information, requirements, reports, data, surveys and instructions required by this Agreement. MSE may use such information, requirements, reports, data, surveys and instructions in performing its services and is entitled to rely upon the accuracy and completeness thereof. MSE shall not be held responsible for any errors or omissions that may arise as a result of erroneous or incomplete information provided by the Client and/or the Client's consultants and contractors.

INSURANCE

During the term of this Agreement, MSE agrees to provide the insurance coverages noted on the sample insurance certificates that follow these Terms and Conditions. If additional coverage is required over and above the noted coverages, the Client shall reimburse MSE 100% of the premium(s) charged for the additional coverage required

over and above the noted coverage. In addition, MSE agrees to attempt to maintain continuous professional liability coverage for the period of design and construction of this project and for a period of three (3) years following substantial completion, if such coverage is reasonably available at commercially affordable premiums. For the purposes of this Agreement, "reasonably available" and "commercially affordable" shall be defined as the availability of insurance allowing more than 50% of the design professionals practicing in the State of Arkansas in this discipline being able to obtain such coverage. Insurance coverages shall be subject to all the terms, exclusions, and conditions of the policies.

JOBSITE SAFETY

Neither the professional activities of MSE, nor the presence of MSE or its employees and subconsultants at a construction/project site, shall impose any duty on MSE, nor relieve the General Contractor of its obligations, duties, and responsibilities including, but not limited to, construction means, methods, sequence, techniques or procedures necessary for performing, superintending, and coordinating the Work in accordance with the contract documents and any health or safety precautions required by any regulatory agencies. MSE and its personnel have no authority to exercise any control over any construction contractor or its employees in connection with their work or any health or safety programs or procedures. The Client agrees that the General Contractor shall be solely responsible for jobsite and worker safety, and warrants that this intent shall be carried out in the Client's contract with the General Contractor. The Client also agrees that the General Contractor shall defend and indemnify the Client, MSE, and MSE's subconsultants. The Client also agrees that the Client, MSE, and MSE's subconsultants shall be made additional insureds under the General Contractor's policies of general liability insurance.

LIEN RIGHTS

Client agrees that MSE shall have a lien upon real property constituting the Project site for all unpaid sums due pursuant to this Agreement or any addendums hereto. Also, MSE is authorized to perfect a lien, enforce the lien, and foreclose the lien in the manner allowed by local statutes for a mechanic and materialman's lien upon real property.

LIMITATION OF LIABILITY

In recognition of the relative risks and benefits of the Project to both the Client and MSE, the risks have been allocated such that the Client agrees, to the fullest extent permitted by law, to limit the liability of MSE and MSE's officers, directors, partners, employees, shareholders, owners, and subconsultants for any and all claims, losses, costs, damages of any nature whatsoever or claims expenses from any cause or causes, including attorneys' fees and costs and expert-witness fees and costs, so that the total aggregate liability of MSE and MSE's officers, directors, partners, employees, shareholders, owners, and subconsultants shall not exceed the total sum paid to or on behalf of MSE by MSE's insurance policies applicable thereto subject to all terms, exclusions, and conditions of the policies. It is intended that this limitation apply to any and all liability or cause of action however alleged or arising, unless otherwise prohibited by law.

OPINIONS OF PROBABLE CONSTRUCTION COSTS

In providing opinions of probable construction costs, the Client understands that MSE has no control over the cost or availability of labor, equipment or materials, or over market conditions or the Contractor's method of pricing, and that MSE's opinions of probable construction costs are made on the basis of MSE's professional judgment and experience. MSE makes no warranty, express or implied, that the bids or the negotiated cost of the work will not vary from MSE's opinion of probable construction cost.

OWNERSHIP OF INSTRUMENTS OF SERVICE

The Client acknowledges MSE's construction documents, including electronic files, as instruments of professional service. Nevertheless, the final construction documents prepared under this Agreement shall become the property of the Client upon completion of the services and payment in full of all monies due to MSE. The Client shall not reuse

or make any modification to the construction documents without the prior written authorization of MSE. The Client agrees, to the fullest extent permitted by law, to indemnify and hold harmless MSE, its officers, directors, employees and subconsultants (collectively, MSE) against any damages, liabilities or costs, including reasonable attorneys' fees and defense costs, arising from or allegedly arising from or in any way connected with the unauthorized reuse or modification of the construction documents by the Client or any person or entity that acquires or obtains the construction documents from or through the Client without the written authorization of MSE.

PERMITS AND APPROVALS

MSE will assist the Client in applying for those permits and approvals normally required by law for projects similar to the one for which MSE's services are being engaged. This assistance shall consist of completing and submitting forms to the appropriate regulatory agencies having jurisdiction over the construction documents, and other services normally provided by MSE and included in the Scope of Services of this Agreement.

MSE's assistance does not include, however, special studies, special research, attendance at more than two (2) meetings with public authorities, special testing or special documentation not usually and customarily required for this type of project. MSE will provide such special services as Additional Services as authorized in writing by the Client in accordance with the compensation provisions of this Agreement.

When permit or review fees are required, the Client shall either 1) pay these directly to the requesting agency, or 2) provide MSE full payment on an instrument payable to requesting agency prior to MSE's submittal of documents requiring permit(s) or review(s). MSE may elect to pay, on behalf of the Client, permit or review fees. Same will be invoiced to Client as Reimbursable Expenses, in addition to MSE's Fees, at 110% of MSE's cost.

MSE provides no guarantee regarding the timeframe for obtaining approvals from outside agencies nor does it guarantee approval of any permits.

PRECEDENCE

These Terms and Conditions shall take precedence over any inconsistent or contradictory provisions contained in any proposal, contract, purchase order, requisition, notice to proceed, or like document regarding MSE's services.

RECORD DOCUMENTS

If included in MSE's Scope of Services, upon completion of the Work, MSE shall compile for and deliver to the Client a reproducible set of Record Documents based upon the marked-up record drawings, addenda, change orders and other data furnished by the Contractor or other third parties. These Record Documents will show significant changes made during construction. Because these Record Documents are based on unverified information provided by other parties, which MSE is entitled to assume will be reliable, MSE cannot and does not warrant their accuracy or completeness.

REJECTION OF WORK

MSE shall have the authority, but not the duty, to recommend to the Client rejection of any Work that, in the judgment of MSE, does not conform to the Construction Documents. Neither this authority nor MSE's good-faith judgment to reject or not reject any Work shall subject MSE to any liability to or cause of action by the Contractor, subcontractors, or any other suppliers or persons performing work on this project.

SEVERABILITY

If any of these Terms and Conditions shall be finally determined to be invalid or unenforceable in whole or part, the remaining provisions hereof shall remain in full force and effect, and be binding upon the parties hereto. The parties agree to reform this Agreement to replace any such invalid or unenforceable provision with a valid and enforceable provision that comes as close as possible to the intention of the stricken provision.

SHOP DRAWING REVIEW

MSE shall review and approve or take other appropriate action on the Contractor submittals, such as shop drawings, product data, samples, and other data, which the Contractor is required to submit, but only for the limited purpose of checking for conformance with the design concept and the information shown in the Construction Documents. This review shall not include review of the accuracy or completeness of details, such as quantities, dimensions, weights or gauges, fabrication processes, construction means or methods, coordination of the work with other trades or construction safety precautions, all of which are the sole responsibility of the Contractor. MSE's review shall be conducted with reasonable promptness while allowing sufficient time in MSE's judgment to permit adequate review. Review of a specific item shall not indicate that MSE has reviewed the entire assembly of which the item is a component. MSE shall not be responsible for any deviations from the Construction Documents not brought to the attention of MSE in writing by the Contractor. MSE shall not be required to review partial submissions or those for which submissions of correlated items have not been received.

STANDARD OF CARE

In providing services under this Agreement, MSE shall perform in a manner consistent with that degree of care and skill ordinarily exercised by members of the same profession currently practicing under similar circumstances at the same time and in the same or similar locality. MSE makes no warranties, express or implied, as to its professional services rendered under this Agreement. Accordingly, the Client should prepare and plan for clarifications and modifications, which may impact both the cost and schedule of the Project. MSE and its subconsultants may use or rely upon the design services of others, including, but not limited to, contractors, manufacturers, and suppliers. Nothing in this Agreement is intended to create, nor shall it be construed to create, a fiduciary duty owed by either party to the other party.

SUCCESSORS, ASSIGNS, AND BENEFICIARIES

Client and MSE each is hereby bound and the partners, successors, executors, administrators, and legal representatives of Client and MSE are hereby bound to the other party to this Agreement and to the partners, successors, executors, administrators, and legal representatives (and said assigns) of such other party, in respect of all covenants, agreements, and obligations of this Agreement.

Neither Client nor MSE may assign, sublet, or transfer any rights under or interest (including, but without limitation, moneys that are due or may become due) in this Agreement without the written consent of the other, except to the extent that any assignment, subletting, or transfer is mandated or restricted by law. Unless specifically stated to the contrary in any written consent to an assignment, no assignment will release or discharge the assignor from any duty or responsibility under this Agreement.

SURVIVAL

These Terms and Conditions shall survive the completion of the services under this Agreement and the termination of this Agreement for any cause.

TERMINATION

In the event of termination of this Agreement by either party, the Client shall, within fifteen (15) calendar days of termination, pay MSE for all services rendered and all reimbursable costs incurred by MSE up to the date of termination, in accordance with the payment provisions of this Agreement.
The Client may terminate this Agreement for the Client's convenience and without cause upon giving MSE not less than seven (7) calendar days' written notice.

Either party may terminate this Agreement for cause upon giving the other party not less than seven (7) calendar days written notice for any of the following reasons:

1. Substantial failure by the other party to perform in accordance with the terms of this Agreement and through no fault of the terminating party;

2. Assignment of this Agreement or transfer of the Project by either party to any other entity without the prior written consent of the other party;

3. Suspension of the Project or MSE's services by the Client for more than ninety (90) calendar days, consecutive or in the aggregate;

4. Material changes in the conditions under which this Agreement was entered into, the Scope of Services or the nature of the Project, and the failure of the parties to reach agreement on the compensation and schedule adjustments necessitated by such changes.

In the event of any termination that is not the fault of MSE, the Client shall pay MSE, in addition to payment for services rendered and reimbursable costs incurred, for all expenses reasonably incurred by MSE in connection with the orderly termination of this Agreement, including but not limited to demobilization, reassignment of personnel, associated overhead costs and all other expenses directly resulting from the termination.

THIRD PARTY BENEFICIARIES

Nothing contained in this Agreement shall create a contractual relationship with or a cause of action in favor of a third party against either the Client or MSE. MSE's services under this Agreement are being performed solely for the Client's benefit, and no other party or entity shall have any claim against MSE because of this Agreement or the performance or nonperformance of services hereunder. The Client and MSE agree to require a similar provision in all contracts with contractors, subcontractors, subconsultants, vendors and other entities involved in this Project to carry out the intent of this provision.

VALUE ENGINEERING

If the Client retains the services of a Value Engineer (VE) to review the plans prepared by MSE, these services shall be at the Client's sole expense and shall be performed in a timely manner so as not to delay the orderly progress of MSE's services. The Client shall promptly notify MSE of the identity of the VE and shall define the VE's scope of services. All recommendations of the VE shall be given to MSE for review, and adequate time will be provided for MSE to respond to these recommendations.

If MSE objects to any recommendations made by the VE, it shall so state in writing to the Client, along with the reasons for objecting. If the Client, in spite of MSE's objections, requires the incorporation of changes in the Construction Documents, the Client agrees, to the fullest extent permitted by law, to waive all claims against MSE and to indemnify and hold harmless MSE from any damages, liabilities or costs, including reasonable attorneys' fees and costs of defense, which arise in connection with or as a result of the incorporation of such design changes required by the Client.

MSE shall be compensated for services necessary to incorporate recommended value engineering changes into reports, drawings, specifications, bidding or other documents. MSE shall be compensated as Additional Services for all time spent to prepare for, review, and respond to the recommendations of the VE. MSE's time for performance of its services shall be equitably adjusted.

END OF TERMS AND CONDITIONS

RESOLUTION NO. _____

A RESOLUTION AUTHORIZING THE MAYOR AND CLERK TO ENTER INTO AN AGREEMENT WITH MORRISON SHIPLEY FOR THE CIVIL ENGINEERING SERVICES FOR STATION 3 BUILDING ADDITION.

WHEREAS, with the increase of staffing, Station 3 needs an addition to the structure including individual bedrooms and updating. Station 3 was opened in 1996.

WHEREAS, The Bentonville Fire Department personnel chose Morrison Shipley after reviewing RFQ's on file with the City.

NOW, THEREFORE, BE IT RESOLVED BY THE CITY COUNCIL FOR THE CITY OF BENTONVILLE, ARKANSAS.

Section 1: That the Mayor and Clerk be and are hereby authorized to enter into an Agreement with Morrison Shipley for the civil engineering services for Station 3 building addition, as set forth in the agreement attached hereto as Exhibit "A".

Section 2: This resolution shall be in full force and effect from and after the date of its passage.

PASSED and APPROVED this _____ day of _____, 2021.

APPROVED:

_____
MAYOR

ATTEST:

_____
CITY CLERK

Agenda Item Form

Date of City Council Meeting	**6/22/2021**
Department	**Engineering**
Submitted by	**Dan Weese**
Phone	**(479) 254-2024**

Item Type: (*Check Applicable Item Type*)					
☐ Budget Adjustment	☐ Change Order	☐ Informational	☐ Ordinance	☑ Resolution	☐ Bid Award

Recommendation/Suggested Action ***(Enter recommendation in space below)*:**

Resolution allowing the Mayor to enter into a professional services agreement with Pollution Management, Inc. for engineering and project services for NW 5th and Bella Vista Drainage. The cost of this contract will be $34,600.00. This Firm was selected following the City's standard RFQ solicitation and selection process for the procurement of professional services in accordance with state law.

Estimated Cost	**$34,600**
Is this Item Budgeted?	☐ Yes ☑ No

If no, please explain how item will be funded ***(briefly explain in space below)*** **:**

This project is part of the Bond program.

Memorandum

To: Mayor and City Council

From: Dan Weese, City Engineer

Date: Friday, June 4, 2021

Re: PSA for NW 5th and Bella Vista Drainage

Project Description: Extend the collection system and add curb and gutter near NE 5th and Bella Vista.

Pollution Management, Inc. has been selected to perform all related engineering services needed for this project. This Professional Services Agreement (PSA) amount for this project is $34,600.00.

Staff requests approval of a resolution allowing the Mayor to enter into a PSA with Pollution Management, Inc. for this project.

Please contact me with any questions or concerns regarding this PSA or the project as a whole. My telephone number is (479) 254-2024 or I can be reached via email at dweese@bentonvillear.com

PROFESSIONAL SERVICES AGREEMENT

PROJECT NAME: **NW 5th and Bella Vista Way (Munis# 21EN0007)** ("PROJECT")

THIS AGREEMENT ("AGREEMENT") is made in Benton County, Arkansas, by and between the City of Bentonville, Arkansas, hereinafter referred to as "CITY", and Pollution Management, Inc., hereinafter referred to as "ENGINEER" (collectively, the "PARTIES").

The PARTIES have caused this AGREEMENT to be effective this ____ day of _____ , 20 ____ ("EFFECTIVE DATE").

RECITALS:

A. WHEREAS, the CITY has a need to perform capital improvement projects for the City of Bentonville, Arkansas; and

B. WHEREAS, The CITY has selected the ENGINEER and negotiated this AGREEMENT using the procedures as set forth in Ark. Code Ann. § 19-11-800; and

C. WHEREAS, the CITY wishes to contract for Professional Services; and

D. WHEREAS, The ENGINEER has the skill, experience, ability, background, certifications and knowledge to provide these services; and

E. WHEREAS, The ENGINEER wishes to perform such professional services under this AGREEMENT with the CITY.

NOW, THEREFORE, in consideration of the terms in this AGREEMENT, the CITY and ENGINEER agree to the following:

ARTICLE I - PROJECT DESCRIPTION

The PROJECT shall be as described in APPENDIX A. "Project Description", attached hereto and incorporated herein by reference.

ARTICLE II - SCOPE OF SERVICE

Upon issuance of a written Notice to Proceed by the CITY, ENGINEER agrees to provide the CITY the necessary professional services related to the PROJECT, as set forth in APPENDIX B, "Scope of Services" ("SCOPE"), attached hereto and incorporated herein by reference.

ARTICLE III - STANDARD OF CARE

ENGINEER shall at all times material hereto adhere to the generally accepted standard of care typically exhibited by similarly situated professionals performing similar scope(s) of service on projects of like size, scope, nature, cost, schedule, and complexity, at the same time and in the same general regional locale ("Standard of Care").

ARTICLE IV - ADDITIONAL SERVICES

A. Any service outside of the work described herein or included by reference hereto must be pre-approved by the CITY and executed as an AMENDMENT to this AGREEMENT by the Parties prior to any such work being completed; any such AMENDMENT shall be in accordance with the CITY'S purchasing laws and guidelines and may require approval from the Bentonville City Council.

B. ENGINEER shall make no claims for additional services or changes in the services until an AMENDMENT has been fully executed by the Parties.

ARTICLE V - SCHEDULE OF FEES, SERVICES AND PAYMENT

A. The term of this AGREEMENT shall commence on the EFFECTIVE DATE and shall proceed in accordance with APPENDIX C, "Schedule of Fees and Services, Key Milestones, and Durations for Major Tasks", attached hereto and incorporated herein by reference.

B. The cost of this AGREEMENT shall be in accordance with APPENDIX C.

C. CITY agrees to pay ENGINEER for all services authorized by inclusion in this AGREEMENT which have been properly performed by ENGINEER in accordance with this AGREEMENT.

D. All fees paid to ENGINEER shall be based on invoices submitted by ENGINEER for work performed under this AGREEMENT, less any previous payments. ENGINEER shall submit invoices for services related to this AGREEMENT on a monthly basis.

E. CITY reserves the right to delay, without penalty, any partial payment when, in the opinion of the CITY, ENGINEER has not made satisfactory progress on the Project based on the SCOPE. If CITY objects to any portion of an invoice, the CITY shall notify ENGINEER and shall pay all other portions of the invoice which are not in dispute. In the event of dispute, CITY and ENGINEER shall immediately make every effort to settle the disputed portion of the invoice.

F. In the event that the CITY becomes credibly informed that any representations of ENGINEER provided in its invoicing are wholly or partially inaccurate, CITY may withhold payment of sums then, or in the future, otherwise due to ENGINEER until the inaccuracy and the cause thereof is corrected to the CITY's reasonable satisfaction.

G. If the CITY fails to make any payment, not in dispute, due to ENGINEER within thirty (30) days after receipt of an invoice, then the amount due to the ENGINEER will increase at the lesser of one percent (1 %) per month or the maximum amount allowed by law after the 30th day. In addition, ENGINEER may, after giving seven (7) days' written notice to CITY, suspend its services and any deliverables until ENGINEER has been paid in full for all amounts outstanding more than thirty (30) days.

ARTICLE VI - INSURANCE

A. ENGINEER shall during the term hereof maintain in full force and effect the following insurance:

1. A comprehensive general liability policy of insurance for bodily injury, death and property damage insuring against all claims, demands or actions relating to the ENGINEER's performance of services pursuant to this AGREEMENT with a combined single limit of not less than $1,000,000.00 per occurrence and $2,000,000 in the aggregate for injury to persons (including death), and for property damage;
2. A policy of automobile liability insurance covering any vehicles owned and/or operated by ENGINEER, its officers, agents, and employees, and used in the performance of this AGREEMENT with policy limits of not less than $1,000,000.00 combined single limit and aggregate for bodily injury and property damage;
3. Statutory Worker's Compensation Insurance at the statutory limits and Employers Liability covering all of ENGINEER's employees involved in the provision of services under this AGREEMENT with policy limit of not less than $1,000,000.00; and
4. Professional Liability/Errors and Omissions coverage covering negligent acts, errors and omissions in the performance of professional services with policy limit of not less than $1,000,000.00.

B. All insurance and certificate(s) of insurance shall contain the following provisions:

1. Include CITY as additional insured as to all applicable coverage with the exception of Workers Compensation Insurance and Professional Liability/Errors and Omissions coverage; and
2. provide for at least thirty (30) days prior written notice to CITY for cancellation or non-renewal of the insurance;
3. provide for a waiver of subrogation against CITY for injuries, including death, property damage, or any other loss to the extent the same is covered by the proceeds of insurance, except for Professional Liability/Errors and Omissions coverage.

C. ENGINEER shall provide 30 day written notice to CITY of any material change of or to the insurance required herein.

D. All insurance companies providing the required insurance shall be authorized to transact business in Arkansas and rated at least "A" by AM Best or other equivalent rating service. A certificate of insurance evidencing the required insurance and all endorsements required by this Agreement shall be submitted prior to commencement of services.

E. In the event that additional or greater insurance requirements are warranted, these requirements shall be included as an Appendix, which will be attached hereto and incorporated by reference.

ARTICLE VII - RIGHT OF ACCESS

A. CITY will obtain and/or furnish right-of-access for ENGINEER to perform any required studies, surveys, tests or other necessary investigations in relation to the PROJECT.

B. ENGINEER will take reasonable precautions to minimize damage to the personal or real property in the performance of such surveys, tests, studies and investigations.

C. CITY recognizes that ENGINEER's operations and use of equipment may unavoidably alter existing conditions or affect the environment at the PROJECT site. The cost of repairing such damage shall be the responsibility of ENGINEER, at no additional cost to the CITY. In the event that ENGINEER fails to correct such damages, CITY is entitled to utilize CITY forces or other labor to repair the damage; any costs incurred by CITY for such work shall be deducted from the monies due to ENGINEER.

ARTICLE VIII - RECORDS AND RETENTION

A. All surveys, studies, proposals, applications, drawings, plans, specifications and other documents, including those in electronic form, prepared by ENGINEER and its ENGINEERs, subcontractors, agents, representatives, and/or employees in connection with this AGREEMENT ("PROJECT DOCUMENTS") are intended for the use and benefit of CITY. ENGINEER and its ENGINEERs, subcontractors, agents, representatives, and/or employees shall be deemed the authors of their respective part of the PROJECT DOCUMENTS. Notwithstanding anything to the contrary, CITY shall own, have, and retain all rights, title and interest in and to all PROJECT DOCUMENTS, whether in draft form or final form, which are produced at CITY's request or otherwise produced from ENGINEER's performance of the work described herein for CITY. The CITY's ownership of PROJECT DOCUMENTS shall not apply to ENGINEER's proprietary standard details that were developed by the ENGINEER prior to the commencement of this PROJECT.

B. CITY shall have full authority to reuse, reproduce, publish, disclose and distribute PROJECT DOCUMENTS, as needed, according to Arkansas State Law.

C. ENGINEER shall, upon completion of the services and full payment for the ENGINEER'S services by the CITY, or earlier termination and appropriate compensation as provided by this AGREEMENT, provide the CITY with all PROJECT DOCUMENTS prepared by ENGINEER pursuant to this AGREEMENT in formats requested by the CITY.

D. All instruments of service (including plans, specifications, drawings, reports, designs, computations, computer programs, estimates, surveys, other data or work items, etc.) prepared under this AGREEMENT shall be submitted for approval to the CITY. All instruments of service shall be professionally sealed in accordance to applicable laws or at CITY's request.

E. Acceptance and approval of the PROJECT DOCUMENTS by the CITY shall not constitute nor be deemed a release of the responsibility and liability of ENGINEER, its employees, associates, agents and ENGINEERs for the accuracy or competency of their designs, working drawings and specifications, or other documents and work; nor shall such approval be deemed to be an assumption of such responsibility by the CITY for any defect in the designs, working drawings and specifications, or other documents prepared by ENGINEER, its employees, contractor, agents and ENGINEERs.

F. ENGINEER will retain the PROJECT DOCUMENTS for a period of three years following project completion. During this three year period, any requests for document recovery and reproduction will be assessed a fee in accordance with ENGINEER's FEES.

ARTICLE IX - SAFETY

A. CITY agrees to inform ENGINEER of any applicable site safety procedures and regulations known to CITY as well as any special safety concerns or dangerous conditions at the site of which the CITY is aware, which ENGINEER shall communicate to its employees. ENGINEER and its employees shall adhere to such procedures and regulations once notice has been given by the CITY.

B. Unless specifically provided in the SCOPE, ENGINEER shall not have any responsibility for overall job safety at the site. If in the ENGINEER's opinion, its field personnel are unable to access required locations or perform required services in conformance with applicable safety standards, ENGINEER may immediately suspend performance until such safety standards can be attained.

C. ENGINEER agrees to indemnify and hold harmless the CITY for any safety conditions that may arise out of ENGINEER's performance of this AGREEMENT.

ARTICLE X - TERMINATION

A. CITY may suspend or terminate this AGREEMENT for cause or without cause at any time by giving written notice to ENGINEER. In the event suspension or termination is without cause, payment to ENGINEER, in accordance with the terms of this AGREEMENT, will be made on the basis of services reasonably determined by the CITY to be satisfactorily performed to the date of suspension or termination. Such payment will be due upon delivery of all instruments of service to CITY.

B. Should the CITY require a modification of this AGREEMENT with the ENGINEER, and in the event the CITY and ENGINEER fail to agree upon a modification to this AGREEMENT, the CITY shall have the option of terminating this AGREEMENT and the ENGINEER's services hereunder at no additional cost other than the payment to ENGINEER, in accordance with the terms of this AGREEMENT, for the services reasonably determined by the CITY to be properly performed by ENGINEER prior to such termination date.

C. If, for whatever adequate funding is not made available by CITY to support or justify continuation of the level of services to be provided by ENGINEER under this AGREEMENT, CITY may terminate or reduce the amount of services to be provided by ENGINEER under this AGREEMENT. In such event, CITY will notify ENGINEER in writing at least thirty (30) days in advance of such termination or reduction of services for lack of funds.

D. In no event shall the CITY pay to ENGINEER fees for termination outside of payment for services reasonably determined by the City to be properly performed prior to termination.

ARTICLE XI - INDEMNIFICATION

A. For purposes of this AGREEMENT, ENGINEER agrees to indemnify, hold harmless the CITY, its officers and employees from any loss, damage, liability or expense, of any nature whatsoever to the extent caused by the negligence, willful misconduct, or other actionable fault of ENGINEER, its affiliates, subsidiaries, employees, agents, assignees, and subcontractors and their respective employees and agents. ENGINEER is not required hereunder to defend the CITY, its officers, appointees, employees, or agents from assertions that they were negligent, nor to indemnify and hold them harmless from liability based on the CITY's negligence

B. Nothing contained herein shall waive any governmental immunity CITY may be entitled to by law.

C. This provision shall survive the termination of this AGREEMENT.

ARTICLE XII - CONTINGENCY CLAUSE

A. The CITY may add a contingency amount to the contract to cover additional services as described in APPENDIX B. Any use of such contingency funds for additional services shall be executed as an AMENDMENT to this AGREEMENT.

B. The Contingency shall in no manner substitute for an official AMENDMENT.

ARTICLE XIII - RELATIONSHIP OF THE PARTIES

It is understood and agreed by and between the parties that the ENGINEER, in satisfying the conditions of this AGREEMENT, is acting independently, and that the CITY assumes no responsibility or liabilities to any third party in connection with ENGINEER's actions. All services to be performed by the ENGINEER pursuant to this AGREEMENT shall be in the capacity of an Independent Contractor, and not as an agent or employee of CITY. The ENGINEER shall supervise the performance of its services and shall be entitled to control the manner and means by which its services are to be performed, subject to the terms of this AGREEMENT. There is no intended third party beneficiary to the AGREEMENT and nothing contained herein shall create a contractual relationship with, or any rights in favor of, any third party.

ARTICLE XIV - DISPUTE RESOLUTION

A. CITY and ENGINEER agree that disputes relative to the services will first be addressed by negotiations between the Parties. If direct negotiations fail to resolve the dispute, the Party initiating the claim that is the basis for dispute may take such steps as it deems necessary to protect its interests; provided, however, that notwithstanding any such dispute, ENGINEER will proceed with the services as per this AGREEMENT as if no dispute existed, and CITY will continue to make payment for ENGINEER's completed services; and provided further that no dispute will be submitted to arbitration without both Parties' express written consent.

ARTICLE XV - OPINIONS OF PROBABLE COST

A. Since the ENGINEER has no control over the cost of labor, materials, equipment or services furnished by others, or over methods of determining prices, or over competitive bidding or market conditions, the ENGINEER's estimates of PROJECT costs and construction costs provided for herein are to be made on the basis of the ENGINEER's experience and qualifications and represent the ENGINEER's judgement in accordance with the "Standard of Care". The ENGINEER cannot and does not guarantee that proposals, bids or actual PROJECT or construction costs will not vary from estimates prepared by the ENGINEER.

B. The CITY understands that the construction cost estimates developed by the ENGINEER do not establish a limit for construction contract amount. If the actual amount of the low construction bid exceeds the construction budget established by the CITY, the ENGINEER will not be required to re-design the PROJECT or any part thereof without additional compensation.

ARTICLE XVI - APPLICABLE LAWS

ENGINEER shall comply with all Federal, State, Local laws, ordinances, resolutions, specifications, regulations and all other laws or regulations relating or applicable to service to be performed under this AGREEMENT. Interpretation of this AGREEMENT and disputes arising out of or related to this AGREEMENT will be subject to and governed by the laws of the State of Arkansas. Jurisdiction and venue for any suit arising out of or related to this AGREEMENT will be in the District Court of Benton County, Arkansas,

ARTICLE XVII - PRECEDENCE

This AGREEMENT shall take precedence over any inconsistent of contradictory provisions contained in any proposal, contract, purchase order, requisition, notice to proceed, or any other like document regarding the PROJECT or ENGINEER's services.

ARTICLE XVIII - SEVERABILITY

A. In the event that one or more provisions contained herein shall, for any reason, be deemed invalid, illegal, void or unenforceable, in whole or in part, the remaining provisions hereof shall remain in full force and effect.

B. In the event that any provision hereof is in conflict with any statutory provision of the State of Arkansas, said provision, which may be in conflict therewith, shall be deemed inoperative, null and void insofar as it may be in conflict therewith, and shall be deemed modified to conform to such statutory provisions; provided, however, that the remaining provisions of this AGREEMENT will be unaffected and will continue to be valid and enforceable.

ARTICLE XIX - SURVIVAL OF OBLIGATIONS

The obligations of the Parties contained in this AGREEMENT, which by their nature survive after the term of the AGREEMENT, shall survive the termination or expiration of this AGREEMENT and continue indefinitely or as otherwise provided by this AGREEMENT.

ARTICLE XIX – ENTIRE AGREEMENT

This AGREEMENT, including all documents and Appendices included by reference herein, constitutes the entire agreement between the PARTIES and supersedes all prior agreements, whether oral or written, covering the same subject matter. This AGREEMENT may not be modified or amended except in writing, mutually agreed upon and accepted by both PARTIES to this AGREEMENT.

The cost of this AGREEMENT including all reimbursable expenses as described in the FEES AND SCHEDULE, **shall not exceed:**

Thirty four thousand six hundred dollars and 00/100

$ 34,600.00 , unless otherwise approved by the CITY through an official AMENDMENT agreed and executed by CITY and ENGINEER.

IN WITNESS THEREOF, the CITY and ENGINEER have executed this AGREEMENT, the EFFECTIVE DATE of which is indicated on page 1 of this AGREEMENT.

CITY OF BENTONVILLE	**Pollution Management, Inc.**
CITY	ENGINEER
BY	BY
MAYOR	**Principal – Engineering Division**
TITLE	TITLE
DATE SIGNED	DATE SIGNED

APPENDIX A
PROJECT DESCRIPTION

BASIC PROJECT INFORMATION: EXTEND THE COLLECTION SYSTEM AND ADD CURB AND GUTTER.

APPENDIX B

SCOPE OF SERVICES

SERVICES BY THE CITY

- Furnish required information and approvals and perform responsibilities and activities in a timely manner to facilitate orderly progress of the work.
- Provide criteria and information as to the requirements for the PROJECT, including design objectives and constraints, right-of-way, capacity and performance requirements, and any budgetary limitations.
- Furnish copies of design and construction standards that the CITY will require to be included in the drawings and specifications.
- Assist the ENGINEER by placing at their disposal all available information pertinent to the PROJECT, including previous reports and other data relative to design or construction of the PROJECT.
- Arrange for access to public and private property as required for the PROJECT.
- Obtain the necessary lands, easements and rights-of-way for the PROJECT.
- Reimburse all plan review, advertising costs, permits and approvals in connection with the PROJECT.
- Pay the ENGINEER is accordance with the terms of the AGREEMENT.

If the CITY observes or otherwise becomes aware of any fault or defect in the PROJECT, the CITY shall give prompt written notice thereof to the ENGINEER.

SERVICES BY THE ENGINEER

- Meet all requirements of the AGREEMENT including any AMENDMENTS.
- Produce all documents and services needed for the PROJECT, including but not limited to:

  Topographical surveys, Right-of-Way Surveys, Utility Surveys and Coordination, Traffic Study, Geotechnical Investigations, Environmental Surveys, Permitting, Major Drainage Study, Conceptual Design Phase (30%), Preliminary Design Phase (60%), Final Design Phase (90%), Public Meetings, Bidding Services, Construction Support Services, Project Management Services, Project Closeout.
- Project Management services for the entire life of the project that align with the Project Management Institute Project Management Book of Knowledge Latest Edition.
- All Design and Construction shall conform to Federal, State and Local regulations.
- Coordinate PROJECT with Franchise Utility Companies to assure adequate space for all facilities and timely relocations.
- Coordinate and Furnish approvals and permits from all Regulatory Agencies having jurisdiction over the PROJECT.
- Provide all services relevant to City of Bentonville Plan Review procedures.
- Create and provide all documents for property acquisitions and assist with any layout or staking required.
- Coordinate and facilitate meetings with CITY and Agencies for plan review, project coordination and right-of-way.
- Subcontracting of services by the ENGINEER shall have prior approval of the CITY.

APPENDIX C

SCHEDULE OF FEES AND SERVICES, KEY MILESTONES, AND DURATIONS
FOR MAJOR TASKS

Appendix C - Cost Proposal

Project: NW 5th and Bella Vista
Location: Bentonville, AR

A. Stormwater Improvements Engineering

	Task	Engineer IV $165.00	Engineer III $145.00	Engineer II $125.00	Field Services Tech $45.00	Total Hours	Total Cost
1.	Site Investigation & Planning Phase	16	4			20	$3,220.00
2.	Perform Hydrologic and Hydraulic Analysis	2	6	10		18	$2,450.00
3.	Develop Plans & Specifications	2	40	60		102	$13,630.00
4.	Assist with Project Bidding		4			4	$580.00
5.	Construction Support Services	4	8	8	160	20	$10,020.00
6.	Project Management & Closeout	4	2	8		14	$1,950.00
	Total Hours	28	64	86	160	178	
	Total Cost Item A.	$4,620.00	$9,280.00	$10,750.00	$7,200.00		**$31,850.00**

B. Reimbursable Costs

	Item	Cost/Unit	Units	Total Cost
1.	Topographic & Boundary Surveys	$1,750.00	1	$1,750.00
2.	Mileage & Miscellaneous Costs	$1,000.00	1	$1,000.00
	Total Cost Item B.			**$2,750.00**

C. Project Summary

A.	Stormwater Improvements Engineering	$31,850.00
B.	Reimbursable Costs	$2,750.00
	Total Project Cost	**$34,600.00**

RESOLUTION NO. _____

A RESOLUTION AUTHORIZING THE MAYOR TO ENTER INTO AN AGREEMENT WITH POLLUTION MANAGEMENT, INC., FOR ENGINEERING AND PROJECT SERVICES FOR NW 5TH AND BELLA VISTA DRAINAGE.

NOW, THEREFORE, BE IT RESOLVED BY THE CITY COUNCIL FOR THE CITY OF BENTONVILLE, ARKANSAS.

Section 1: That the Mayor be and is hereby authorized to enter into an agreement with Pollution Management, Inc. for engineering and project services for NW 5th and Bella Vista Drainage in an amount of $34,600 as set forth in the Professional Services Agreement attached hereto as Exhibit "A".

Section 2: This resolution shall be in full force and effect from and after the date of its passage.

PASSED and APPROVED this _____ day of _____, 2021.

APPROVED:

_____
MAYOR

ATTEST:

_____
CITY CLERK

Agenda Item Form

Date of City Council Meeting	**6/22/2021**
Department	**Engineering**
Submitted by	**Dan Weese**
Phone	**(479) 254-2024**

Item Type: (*Check Applicable Item Type*)					
☐ Budget Adjustment	☐ Change Order	☐ Informational	☐ Ordinance	☑ Resolution	☐ Bid Award

Recommendation/Suggested Action *(Enter recommendation in space below)*:

Resolution allowing the Mayor to enter into a professional services agreement with Pollution Management, Inc. for engineering and project services for SE 6th and Main Lateral Drainage. The cost of this contract will be $22,050.00. This Firm was selected following the City's standard RFQ solicitation and selection process for the procurement of professional services in accordance with state law.

Estimated Cost	**$22,050**
Is this Item Budgeted?	☐ Yes ☑ No

If no, please explain how item will be funded *(briefly explain in space below)* **:**

This project is part of the Bond program.

Memorandum

To: Mayor and City Council

From: Dan Weese, City Engineer

Date: Friday, June 4, 2021

Re: PSA for SE 6th and Main St Lateral

Project Description: New collection system and add curb and gutter near SE 6th and Main.

Pollution Management, Inc. has been selected to perform all related engineering services needed for this project. This Professional Services Agreement (PSA) amount for this project is $22,050.00.

Staff requests approval of a resolution allowing the Mayor to enter into a PSA with Pollution Management, Inc. for this project.

Please contact me with any questions or concerns regarding this PSA or the project as a whole. My telephone number is (479) 254-2024 or I can be reached via email at dweese@bentonvillear.com

PROFESSIONAL SERVICES AGREEMENT

PROJECT NAME: **SE 6th and Main Street Lateral (Munis# 21EN0014)** ("PROJECT")

THIS AGREEMENT ("AGREEMENT") is made in Benton County, Arkansas, by and between the City of Bentonville, Arkansas, hereinafter referred to as "CITY", and Pollution Management, Inc., hereinafter referred to as "ENGINEER" (collectively, the "PARTIES").

The PARTIES have caused this AGREEMENT to be effective this ____ day of _____ , 20 ____ ("EFFECTIVE DATE").

RECITALS:

A. WHEREAS, the CITY has a need to perform capital improvement projects for the City of Bentonville, Arkansas; and

B. WHEREAS, The CITY has selected the ENGINEER and negotiated this AGREEMENT using the procedures as set forth in Ark. Code Ann. § 19-11-800; and

C. WHEREAS, the CITY wishes to contract for Professional Services; and

D. WHEREAS, The ENGINEER has the skill, experience, ability, background, certifications and knowledge to provide these services; and

E. WHEREAS, The ENGINEER wishes to perform such professional services under this AGREEMENT with the CITY.

NOW, THEREFORE, in consideration of the terms in this AGREEMENT, the CITY and ENGINEER agree to the following:

ARTICLE I - PROJECT DESCRIPTION

The PROJECT shall be as described in APPENDIX A. "Project Description", attached hereto and incorporated herein by reference.

ARTICLE II - SCOPE OF SERVICE

Upon issuance of a written Notice to Proceed by the CITY, ENGINEER agrees to provide the CITY the necessary professional services related to the PROJECT, as set forth in APPENDIX B, "Scope of Services" ("SCOPE"), attached hereto and incorporated herein by reference.

ARTICLE III - STANDARD OF CARE

ENGINEER shall at all times material hereto adhere to the generally accepted standard of care typically exhibited by similarly situated professionals performing similar scope(s) of service on projects of like size, scope, nature, cost, schedule, and complexity, at the same time and in the same general regional locale ("Standard of Care").

ARTICLE IV - ADDITIONAL SERVICES

A. Any service outside of the work described herein or included by reference hereto must be pre-approved by the CITY and executed as an AMENDMENT to this AGREEMENT by the Parties prior to any such work being completed; any such AMENDMENT shall be in accordance with the CITY'S purchasing laws and guidelines and may require approval from the Bentonville City Council.

B. ENGINEER shall make no claims for additional services or changes in the services until an AMENDMENT has been fully executed by the Parties.

ARTICLE V - SCHEDULE OF FEES, SERVICES AND PAYMENT

A. The term of this AGREEMENT shall commence on the EFFECTIVE DATE and shall proceed in accordance with APPENDIX C, "Schedule of Fees and Services, Key Milestones, and Durations for Major Tasks", attached hereto and incorporated herein by reference.

B. The cost of this AGREEMENT shall be in accordance with APPENDIX C.

C. CITY agrees to pay ENGINEER for all services authorized by inclusion in this AGREEMENT which have been properly performed by ENGINEER in accordance with this AGREEMENT.

D. All fees paid to ENGINEER shall be based on invoices submitted by ENGINEER for work performed under this AGREEMENT, less any previous payments. ENGINEER shall submit invoices for services related to this AGREEMENT on a monthly basis.

E. CITY reserves the right to delay, without penalty, any partial payment when, in the opinion of the CITY, ENGINEER has not made satisfactory progress on the Project based on the SCOPE. If CITY objects to any portion of an invoice, the CITY shall notify ENGINEER and shall pay all other portions of the invoice which are not in dispute. In the event of dispute, CITY and ENGINEER shall immediately make every effort to settle the disputed portion of the invoice.

F. In the event that the CITY becomes credibly informed that any representations of ENGINEER provided in its invoicing are wholly or partially inaccurate, CITY may withhold payment of sums then, or in the future, otherwise due to ENGINEER until the inaccuracy and the cause thereof is corrected to the CITY's reasonable satisfaction.

G. If the CITY fails to make any payment, not in dispute, due to ENGINEER within thirty (30) days after receipt of an invoice, then the amount due to the ENGINEER will increase at the lesser of one percent (1 %) per month or the maximum amount allowed by law after the 30th day. In addition, ENGINEER may, after giving seven (7) days' written notice to CITY, suspend its services and any deliverables until ENGINEER has been paid in full for all amounts outstanding more than thirty (30) days.

ARTICLE VI - INSURANCE

A. ENGINEER shall during the term hereof maintain in full force and effect the following insurance:

1. A comprehensive general liability policy of insurance for bodily injury, death and property damage insuring against all claims, demands or actions relating to the ENGINEER's performance of services pursuant to this AGREEMENT with a combined single limit of not less than $1,000,000.00 per occurrence and $2,000,000 in the aggregate for injury to persons (including death), and for property damage;
2. A policy of automobile liability insurance covering any vehicles owned and/or operated by ENGINEER, its officers, agents, and employees, and used in the performance of this AGREEMENT with policy limits of not less than $1,000,000.00 combined single limit and aggregate for bodily injury and property damage;
3. Statutory Worker's Compensation Insurance at the statutory limits and Employers Liability covering all of ENGINEER's employees involved in the provision of services under this AGREEMENT with policy limit of not less than $1,000,000.00; and
4. Professional Liability/Errors and Omissions coverage covering negligent acts, errors and omissions in the performance of professional services with policy limit of not less than $1,000,000.00.

B. All insurance and certificate(s) of insurance shall contain the following provisions:

1. Include CITY as additional insured as to all applicable coverage with the exception of Workers Compensation Insurance and Professional Liability/Errors and Omissions coverage; and
2. provide for at least thirty (30) days prior written notice to CITY for cancellation or non-renewal of the insurance;
3. provide for a waiver of subrogation against CITY for injuries, including death, property damage, or any other loss to the extent the same is covered by the proceeds of insurance, except for Professional Liability/Errors and Omissions coverage.

C. ENGINEER shall provide 30 day written notice to CITY of any material change of or to the insurance required herein.

D. All insurance companies providing the required insurance shall be authorized to transact business in Arkansas and rated at least "A" by AM Best or other equivalent rating service. A certificate of insurance evidencing the required insurance and all endorsements required by this Agreement shall be submitted prior to commencement of services.

E. In the event that additional or greater insurance requirements are warranted, these requirements shall be included as an Appendix, which will be attached hereto and incorporated by reference.

ARTICLE VII - RIGHT OF ACCESS

A. CITY will obtain and/or furnish right-of-access for ENGINEER to perform any required studies, surveys, tests or other necessary investigations in relation to the PROJECT.

B. ENGINEER will take reasonable precautions to minimize damage to the personal or real property in the performance of such surveys, tests, studies and investigations.

C. CITY recognizes that ENGINEER's operations and use of equipment may unavoidably alter existing conditions or affect the environment at the PROJECT site. The cost of repairing such damage shall be the responsibility of ENGINEER, at no additional cost to the CITY. In the event that ENGINEER fails to correct such damages, CITY is entitled to utilize CITY forces or other labor to repair the damage; any costs incurred by CITY for such work shall be deducted from the monies due to ENGINEER.

ARTICLE VIII - RECORDS AND RETENTION

A. All surveys, studies, proposals, applications, drawings, plans, specifications and other documents, including those in electronic form, prepared by ENGINEER and its ENGINEERs, subcontractors, agents, representatives, and/or employees in connection with this AGREEMENT ("PROJECT DOCUMENTS") are intended for the use and benefit of CITY. ENGINEER and its ENGINEERs, subcontractors, agents, representatives, and/or employees shall be deemed the authors of their respective part of the PROJECT DOCUMENTS. Notwithstanding anything to the contrary, CITY shall own, have, and retain all rights, title and interest in and to all PROJECT DOCUMENTS, whether in draft form or final form, which are produced at CITY's request or otherwise produced from ENGINEER's performance of the work described herein for CITY. The CITY's ownership of PROJECT DOCUMENTS shall not apply to ENGINEER's proprietary standard details that were developed by the ENGINEER prior to the commencement of this PROJECT.

B. CITY shall have full authority to reuse, reproduce, publish, disclose and distribute PROJECT DOCUMENTS, as needed, according to Arkansas State Law.

C. ENGINEER shall, upon completion of the services and full payment for the ENGINEER'S services by the CITY, or earlier termination and appropriate compensation as provided by this AGREEMENT, provide the CITY with all PROJECT DOCUMENTS prepared by ENGINEER pursuant to this AGREEMENT in formats requested by the CITY.

D. All instruments of service (including plans, specifications, drawings, reports, designs, computations, computer programs, estimates, surveys, other data or work items, etc.) prepared under this AGREEMENT shall be submitted for approval to the CITY. All instruments of service shall be professionally sealed in accordance to applicable laws or at CITY's request.

E. Acceptance and approval of the PROJECT DOCUMENTS by the CITY shall not constitute nor be deemed a release of the responsibility and liability of ENGINEER, its employees, associates, agents and ENGINEERs for the accuracy or competency of their designs, working drawings and specifications, or other documents and work; nor shall such approval be deemed to be an assumption of such responsibility by the CITY for any defect in the designs, working drawings and specifications, or other documents prepared by ENGINEER, its employees, contractor, agents and ENGINEERs.

F. ENGINEER will retain the PROJECT DOCUMENTS for a period of three years following project completion. During this three year period, any requests for document recovery and reproduction will be assessed a fee in accordance with ENGINEER's FEES.

ARTICLE IX - SAFETY

A. CITY agrees to inform ENGINEER of any applicable site safety procedures and regulations known to CITY as well as any special safety concerns or dangerous conditions at the site of which the CITY is aware, which ENGINEER shall communicate to its employees. ENGINEER and its employees shall adhere to such procedures and regulations once notice has been given by the CITY.

B. Unless specifically provided in the SCOPE, ENGINEER shall not have any responsibility for overall job safety at the site. If in the ENGINEER's opinion, its field personnel are unable to access required locations or perform required services in conformance with applicable safety standards, ENGINEER may immediately suspend performance until such safety standards can be attained.

C. ENGINEER agrees to indemnify and hold harmless the CITY for any safety conditions that may arise out of ENGINEER's performance of this AGREEMENT.

ARTICLE X - TERMINATION

A. CITY may suspend or terminate this AGREEMENT for cause or without cause at any time by giving written notice to ENGINEER. In the event suspension or termination is without cause, payment to ENGINEER, in accordance with the terms of this AGREEMENT, will be made on the basis of services reasonably determined by the CITY to be satisfactorily performed to the date of suspension or termination. Such payment will be due upon delivery of all instruments of service to CITY.

B. Should the CITY require a modification of this AGREEMENT with the ENGINEER, and in the event the CITY and ENGINEER fail to agree upon a modification to this AGREEMENT, the CITY shall have the option of terminating this AGREEMENT and the ENGINEER's services hereunder at no additional cost other than the payment to ENGINEER, in accordance with the terms of this AGREEMENT, for the services reasonably determined by the CITY to be properly performed by ENGINEER prior to such termination date.

C. If, for whatever adequate funding is not made available by CITY to support or justify continuation of the level of services to be provided by ENGINEER under this AGREEMENT, CITY may terminate or reduce the amount of services to be provided by ENGINEER under this AGREEMENT. In such event, CITY will notify ENGINEER in writing at least thirty (30) days in advance of such termination or reduction of services for lack of funds.

D. In no event shall the CITY pay to ENGINEER fees for termination outside of payment for services reasonably determined by the City to be properly performed prior to termination.

ARTICLE XI - INDEMNIFICATION

A. For purposes of this AGREEMENT, ENGINEER agrees to indemnify, hold harmless the CITY, its officers and employees from any loss, damage, liability or expense, of any nature whatsoever to the extent caused by the negligence, willful misconduct, or other actionable fault of ENGINEER, its affiliates, subsidiaries, employees, agents, assignees, and subcontractors and their respective employees and agents. ENGINEER is not required hereunder to defend the CITY, its officers, appointees, employees, or agents from assertions that they were negligent, nor to indemnify and hold them harmless from liability based on the CITY's negligence

B. Nothing contained herein shall waive any governmental immunity CITY may be entitled to by law.

C. This provision shall survive the termination of this AGREEMENT.

ARTICLE XII - CONTINGENCY CLAUSE

A. The CITY may add a contingency amount to the contract to cover additional services as described in APPENDIX B. Any use of such contingency funds for additional services shall be executed as an AMENDMENT to this AGREEMENT.

B. The Contingency shall in no manner substitute for an official AMENDMENT.

ARTICLE XIII - RELATIONSHIP OF THE PARTIES

It is understood and agreed by and between the parties that the ENGINEER, in satisfying the conditions of this AGREEMENT, is acting independently, and that the CITY assumes no responsibility or liabilities to any third party in connection with ENGINEER's actions. All services to be performed by the ENGINEER pursuant to this AGREEMENT shall be in the capacity of an Independent Contractor, and not as an agent or employee of CITY. The ENGINEER shall supervise the performance of its services and shall be entitled to control the manner and means by which its services are to be performed, subject to the terms of this AGREEMENT. There is no intended third party beneficiary to the AGREEMENT and nothing contained herein shall create a contractual relationship with, or any rights in favor of, any third party.

ARTICLE XIV - DISPUTE RESOLUTION

A. CITY and ENGINEER agree that disputes relative to the services will first be addressed by negotiations between the Parties. If direct negotiations fail to resolve the dispute, the Party initiating the claim that is the basis for dispute may take such steps as it deems necessary to protect its interests; provided, however, that notwithstanding any such dispute, ENGINEER will proceed with the services as per this AGREEMENT as if no dispute existed, and CITY will continue to make payment for ENGINEER's completed services; and provided further that no dispute will be submitted to arbitration without both Parties' express written consent.

ARTICLE XV - OPINIONS OF PROBABLE COST

A. Since the ENGINEER has no control over the cost of labor, materials, equipment or services furnished by others, or over methods of determining prices, or over competitive bidding or market conditions, the ENGINEER's estimates of PROJECT costs and construction costs provided for herein are to be made on the basis of the ENGINEER's experience and qualifications and represent the ENGINEER's judgement in accordance with the "Standard of Care". The ENGINEER cannot and does not guarantee that proposals, bids or actual PROJECT or construction costs will not vary from estimates prepared by the ENGINEER.

B. The CITY understands that the construction cost estimates developed by the ENGINEER do not establish a limit for construction contract amount. If the actual amount of the low construction bid exceeds the construction budget established by the CITY, the ENGINEER will not be required to re-design the PROJECT or any part thereof without additional compensation.

ARTICLE XVI - APPLICABLE LAWS

ENGINEER shall comply with all Federal, State, Local laws, ordinances, resolutions, specifications, regulations and all other laws or regulations relating or applicable to service to be performed under this AGREEMENT. Interpretation of this AGREEMENT and disputes arising out of or related to this AGREEMENT will be subject to and governed by the laws of the State of Arkansas. Jurisdiction and venue for any suit arising out of or related to this AGREEMENT will be in the District Court of Benton County, Arkansas,

ARTICLE XVII - PRECEDENCE

This AGREEMENT shall take precedence over any inconsistent of contradictory provisions contained in any proposal, contract, purchase order, requisition, notice to proceed, or any other like document regarding the PROJECT or ENGINEER's services.

ARTICLE XVIII - SEVERABILITY

A. In the event that one or more provisions contained herein shall, for any reason, be deemed invalid, illegal, void or unenforceable, in whole or in part, the remaining provisions hereof shall remain in full force and effect.

B. In the event that any provision hereof is in conflict with any statutory provision of the State of Arkansas, said provision, which may be in conflict therewith, shall be deemed inoperative, null and void insofar as it may be in conflict therewith, and shall be deemed modified to conform to such statutory provisions; provided, however, that the remaining provisions of this AGREEMENT will be unaffected and will continue to be valid and enforceable.

ARTICLE XIX - SURVIVAL OF OBLIGATIONS

The obligations of the Parties contained in this AGREEMENT, which by their nature survive after the term of the AGREEMENT, shall survive the termination or expiration of this AGREEMENT and continue indefinitely or as otherwise provided by this AGREEMENT.

ARTICLE XIX – ENTIRE AGREEMENT

This AGREEMENT, including all documents and Appendices included by reference herein, constitutes the entire agreement between the PARTIES and supersedes all prior agreements, whether oral or written, covering the same subject matter. This AGREEMENT may not be modified or amended except in writing, mutually agreed upon and accepted by both PARTIES to this AGREEMENT.

The cost of this AGREEMENT including all reimbursable expenses as described in the FEES AND SCHEDULE, **shall not exceed:**

Twenty thousand fifty dollars and 00/100

$ 22,050.00 , unless otherwise approved by the CITY through an official AMENDMENT agreed and executed by CITY and ENGINEER.

IN WITNESS THEREOF, the CITY and ENGINEER have executed this AGREEMENT, the EFFECTIVE DATE of which is indicated on page 1 of this AGREEMENT.

CITY OF BENTONVILLE	**Pollution Management, Inc.**
CITY	ENGINEER
BY	BY
MAYOR	**Principal – Engineering Division**
TITLE	TITLE
DATE SIGNED	DATE SIGNED

APPENDIX A
PROJECT DESCRIPTION

BASIC PROJECT INFORMATION: NEW COLLECTION SYSTEM WITH CURB AND GUTTER.

APPENDIX B

SCOPE OF SERVICES

SERVICES BY THE CITY

- Furnish required information and approvals and perform responsibilities and activities in a timely manner to facilitate orderly progress of the work.
- Provide criteria and information as to the requirements for the PROJECT, including design objectives and constraints, right-of-way, capacity and performance requirements, and any budgetary limitations.
- Furnish copies of design and construction standards that the CITY will require to be included in the drawings and specifications.
- Assist the ENGINEER by placing at their disposal all available information pertinent to the PROJECT, including previous reports and other data relative to design or construction of the PROJECT.
- Arrange for access to public and private property as required for the PROJECT.
- Obtain the necessary lands, easements and rights-of-way for the PROJECT.
- Reimburse all plan review, advertising costs, permits and approvals in connection with the PROJECT.
- Pay the ENGINEER is accordance with the terms of the AGREEMENT.

If the CITY observes or otherwise becomes aware of any fault or defect in the PROJECT, the CITY shall give prompt written notice thereof to the ENGINEER.

SERVICES BY THE ENGINEER

- Meet all requirements of the AGREEMENT including any AMENDMENTS.
- Produce all documents and services needed for the PROJECT, including but not limited to:

  Topographical surveys, Right-of-Way Surveys, Utility Surveys and Coordination, Traffic Study, Geotechnical Investigations, Environmental Surveys, Permitting, Major Drainage Study, Conceptual Design Phase (30%), Preliminary Design Phase (60%), Final Design Phase (90%), Public Meetings, Bidding Services, Construction Support Services, Project Management Services, Project Closeout.
- Project Management services for the entire life of the project that align with the Project Management Institute Project Management Book of Knowledge Latest Edition.
- All Design and Construction shall conform to Federal, State and Local regulations.
- Coordinate PROJECT with Franchise Utility Companies to assure adequate space for all facilities and timely relocations.
- Coordinate and Furnish approvals and permits from all Regulatory Agencies having jurisdiction over the PROJECT.
- Provide all services relevant to City of Bentonville Plan Review procedures.
- Create and provide all documents for property acquisitions and assist with any layout or staking required.
- Coordinate and facilitate meetings with CITY and Agencies for plan review, project coordination and right-of-way.
- Subcontracting of services by the ENGINEER shall have prior approval of the CITY.

APPENDIX C

SCHEDULE OF FEES AND SERVICES, KEY MILESTONES, AND DURATIONS
FOR MAJOR TASKS

Appendix C - Cost Proposal

Project: SE 6th and Main Lateral
Location: Bentonville, AR

A. Stormwater Improvements Engineering

	Task	Engineer IV $165.00	Engineer III $145.00	Engineer I $110.00	Field Services Tech $45.00	Total Hours	Total Cost
1.	Site Investigation & Planning Phase	8	4			12	$1,900.00
2.	Perform Hydrologic and Hydraulic Analysis	2	6	10		18	$2,300.00
3.	Develop Plans & Specifications	2	16	40		58	$7,050.00
4.	Assist with Project Bidding		4			4	$580.00
5.	Construction Support Services		8	8	80	16	$5,640.00
6.	Project Management & Closeout	4	2	8		14	$1,830.00
	Total Hours	16	40	66	80	122	
	Total Cost Item A.	$2,640.00	$5,800.00	$7,260.00	$3,600.00		**$19,300.00**

B. Reimbursable Costs

	Item	Cost/Unit	Units	Total Cost
1.	Topographic & Boundary Surveys	$1,750.00	1	$1,750.00
2.	Mileage & Miscellaneous Costs	$1,000.00	1	$1,000.00
	Total Cost Item B.			**$2,750.00**

C. Project Summary

A.	Stormwater Improvements Engineering	$19,300.00
B.	Reimbursable Costs	$2,750.00
	Total Project Cost	**$22,050.00**

RESOLUTION NO. _____

A RESOLUTION AUTHORIZING THE MAYOR TO ENTER INTO AN AGREEMENT WITH POLLUTION MANAGEMENT, INC., FOR ENGINEERING AND PROJECT SERVICES FOR SE 6TH AND MAIN ST LATERAL.

NOW, THEREFORE, BE IT RESOLVED BY THE CITY COUNCIL FOR THE CITY OF BENTONVILLE, ARKANSAS.

Section 1: That the Mayor be and is hereby authorized to enter into an agreement with Pollution Management, Inc. for engineering and project services for SE 6th and Main Lateral Drainage in an amount of $22,050 as set forth in the Professional Services Agreement attached hereto as Exhibit "A".

Section 2: This resolution shall be in full force and effect from and after the date of its passage.

PASSED and APPROVED this _____ day of _____, 2021.

APPROVED:

_____
MAYOR

ATTEST:

_____
CITY CLERK

Agenda Item Form

Date of City Council Meeting	**6/22/2021**
Department	**Engineering**
Submitted by	**Dan Weese**
Phone	**(479) 254-2024**

Item Type: (*Check Applicable Item Type*)					
☐ Budget Adjustment	☐ Change Order	☐ Informational	☐ Ordinance	☑ Resolution	☐ Bid Award

Recommendation/Suggested Action ***(Enter recommendation in space below)*:**

Resolution allowing the Mayor to enter into a professional services agreement with Pollution Management, Inc. for engineering and project services for SE Henry and F Drainage. The cost of this contract will be $54,200.00. This Firm was selected following the City's standard RFQ solicitation and selection process for the procurement of professional services in accordance with state law.

Estimated Cost	**$54,200**
Is this Item Budgeted?	☐ Yes ☑ No

If no, please explain how item will be funded ***(briefly explain in space below)*** **:**

This project is part of the Bond program.

Memorandum

To: Mayor and City Council

From: Dan Weese, City Engineer

Date: Friday, June 4, 2021

Re: PSA for SE Henry and F Street

Project Description:

Reroute the stormwater flowing from the east to new collection system

Pollution Management, Inc. has been selected to perform all related engineering services needed for this project. This Professional Services Agreement (PSA) amount for this project is $54,200.00.

Staff requests approval of a resolution allowing the Mayor to enter into a PSA with Pollution Management, Inc. for this project.

Please contact me with any questions or concerns regarding this PSA or the project as a whole. My telephone number is (479) 254-2024 or I can be reached via email at dweese@bentonvillear.com

PROFESSIONAL SERVICES AGREEMENT

PROJECT NAME: **SE Henry and F Street (Munis# 21EN0019)** ("PROJECT")

THIS AGREEMENT ("AGREEMENT") is made in Benton County, Arkansas, by and between the City of Bentonville, Arkansas, hereinafter referred to as "CITY", and Pollution Management, Inc., hereinafter referred to as "ENGINEER" (collectively, the "PARTIES").

The PARTIES have caused this AGREEMENT to be effective this ____ day of _____ , 20 ____ ("EFFECTIVE DATE").

RECITALS:

A. WHEREAS, the CITY has a need to perform capital improvement projects for the City of Bentonville, Arkansas; and

B. WHEREAS, The CITY has selected the ENGINEER and negotiated this AGREEMENT using the procedures as set forth in Ark. Code Ann. § 19-11-800; and

C. WHEREAS, the CITY wishes to contract for Professional Services; and

D. WHEREAS, The ENGINEER has the skill, experience, ability, background, certifications and knowledge to provide these services; and

E. WHEREAS, The ENGINEER wishes to perform such professional services under this AGREEMENT with the CITY.

NOW, THEREFORE, in consideration of the terms in this AGREEMENT, the CITY and ENGINEER agree to the following:

ARTICLE I - PROJECT DESCRIPTION

The PROJECT shall be as described in APPENDIX A. "Project Description", attached hereto and incorporated herein by reference.

ARTICLE II - SCOPE OF SERVICE

Upon issuance of a written Notice to Proceed by the CITY, ENGINEER agrees to provide the CITY the necessary professional services related to the PROJECT, as set forth in APPENDIX B, "Scope of Services" ("SCOPE"), attached hereto and incorporated herein by reference.

ARTICLE III - STANDARD OF CARE

ENGINEER shall at all times material hereto adhere to the generally accepted standard of care typically exhibited by similarly situated professionals performing similar scope(s) of service on projects of like size, scope, nature, cost, schedule, and complexity, at the same time and in the same general regional locale ("Standard of Care").

ARTICLE IV - ADDITIONAL SERVICES

A. Any service outside of the work described herein or included by reference hereto must be pre-approved by the CITY and executed as an AMENDMENT to this AGREEMENT by the Parties prior to any such work being completed; any such AMENDMENT shall be in accordance with the CITY'S purchasing laws and guidelines and may require approval from the Bentonville City Council.

B. ENGINEER shall make no claims for additional services or changes in the services until an AMENDMENT has been fully executed by the Parties.

ARTICLE V - SCHEDULE OF FEES, SERVICES AND PAYMENT

A. The term of this AGREEMENT shall commence on the EFFECTIVE DATE and shall proceed in accordance with APPENDIX C, "Schedule of Fees and Services, Key Milestones, and Durations for Major Tasks", attached hereto and incorporated herein by reference.

B. The cost of this AGREEMENT shall be in accordance with APPENDIX C.

C. CITY agrees to pay ENGINEER for all services authorized by inclusion in this AGREEMENT which have been properly performed by ENGINEER in accordance with this AGREEMENT.

D. All fees paid to ENGINEER shall be based on invoices submitted by ENGINEER for work performed under this AGREEMENT, less any previous payments. ENGINEER shall submit invoices for services related to this AGREEMENT on a monthly basis.

E. CITY reserves the right to delay, without penalty, any partial payment when, in the opinion of the CITY, ENGINEER has not made satisfactory progress on the Project based on the SCOPE. If CITY objects to any portion of an invoice, the CITY shall notify ENGINEER and shall pay all other portions of the invoice which are not in dispute. In the event of dispute, CITY and ENGINEER shall immediately make every effort to settle the disputed portion of the invoice.

F. In the event that the CITY becomes credibly informed that any representations of ENGINEER provided in its invoicing are wholly or partially inaccurate, CITY may withhold payment of sums then, or in the future, otherwise due to ENGINEER until the inaccuracy and the cause thereof is corrected to the CITY's reasonable satisfaction.

G. If the CITY fails to make any payment, not in dispute, due to ENGINEER within thirty (30) days after receipt of an invoice, then the amount due to the ENGINEER will increase at the lesser of one percent (1 %) per month or the maximum amount allowed by law after the 30th day. In addition, ENGINEER may, after giving seven (7) days' written notice to CITY, suspend its services and any deliverables until ENGINEER has been paid in full for all amounts outstanding more than thirty (30) days.

ARTICLE VI - INSURANCE

A. ENGINEER shall during the term hereof maintain in full force and effect the following insurance:

1. A comprehensive general liability policy of insurance for bodily injury, death and property damage insuring against all claims, demands or actions relating to the ENGINEER's performance of services pursuant to this AGREEMENT with a combined single limit of not less than $1,000,000.00 per occurrence and $2,000,000 in the aggregate for injury to persons (including death), and for property damage;
2. A policy of automobile liability insurance covering any vehicles owned and/or operated by ENGINEER, its officers, agents, and employees, and used in the performance of this AGREEMENT with policy limits of not less than $1,000,000.00 combined single limit and aggregate for bodily injury and property damage;
3. Statutory Worker's Compensation Insurance at the statutory limits and Employers Liability covering all of ENGINEER's employees involved in the provision of services under this AGREEMENT with policy limit of not less than $1,000,000.00; and
4. Professional Liability/Errors and Omissions coverage covering negligent acts, errors and omissions in the performance of professional services with policy limit of not less than $1,000,000.00.

B. All insurance and certificate(s) of insurance shall contain the following provisions:

1. Include CITY as additional insured as to all applicable coverage with the exception of Workers Compensation Insurance and Professional Liability/Errors and Omissions coverage; and
2. provide for at least thirty (30) days prior written notice to CITY for cancellation or non-renewal of the insurance;
3. provide for a waiver of subrogation against CITY for injuries, including death, property damage, or any other loss to the extent the same is covered by the proceeds of insurance, except for Professional Liability/Errors and Omissions coverage.

C. ENGINEER shall provide 30 day written notice to CITY of any material change of or to the insurance required herein.

D. All insurance companies providing the required insurance shall be authorized to transact business in Arkansas and rated at least "A" by AM Best or other equivalent rating service. A certificate of insurance evidencing the required insurance and all endorsements required by this Agreement shall be submitted prior to commencement of services.

E. In the event that additional or greater insurance requirements are warranted, these requirements shall be included as an Appendix, which will be attached hereto and incorporated by reference.

ARTICLE VII - RIGHT OF ACCESS

A. CITY will obtain and/or furnish right-of-access for ENGINEER to perform any required studies, surveys, tests or other necessary investigations in relation to the PROJECT.

B. ENGINEER will take reasonable precautions to minimize damage to the personal or real property in the performance of such surveys, tests, studies and investigations.

C. CITY recognizes that ENGINEER's operations and use of equipment may unavoidably alter existing conditions or affect the environment at the PROJECT site. The cost of repairing such damage shall be the responsibility of ENGINEER, at no additional cost to the CITY. In the event that ENGINEER fails to correct such damages, CITY is entitled to utilize CITY forces or other labor to repair the damage; any costs incurred by CITY for such work shall be deducted from the monies due to ENGINEER.

ARTICLE VIII - RECORDS AND RETENTION

A. All surveys, studies, proposals, applications, drawings, plans, specifications and other documents, including those in electronic form, prepared by ENGINEER and its ENGINEERs, subcontractors, agents, representatives, and/or employees in connection with this AGREEMENT ("PROJECT DOCUMENTS") are intended for the use and benefit of CITY. ENGINEER and its ENGINEERs, subcontractors, agents, representatives, and/or employees shall be deemed the authors of their respective part of the PROJECT DOCUMENTS. Notwithstanding anything to the contrary, CITY shall own, have, and retain all rights, title and interest in and to all PROJECT DOCUMENTS, whether in draft form or final form, which are produced at CITY's request or otherwise produced from ENGINEER's performance of the work described herein for CITY. The CITY's ownership of PROJECT DOCUMENTS shall not apply to ENGINEER's proprietary standard details that were developed by the ENGINEER prior to the commencement of this PROJECT.

B. CITY shall have full authority to reuse, reproduce, publish, disclose and distribute PROJECT DOCUMENTS, as needed, according to Arkansas State Law.

C. ENGINEER shall, upon completion of the services and full payment for the ENGINEER'S services by the CITY, or earlier termination and appropriate compensation as provided by this AGREEMENT, provide the CITY with all PROJECT DOCUMENTS prepared by ENGINEER pursuant to this AGREEMENT in formats requested by the CITY.

D. All instruments of service (including plans, specifications, drawings, reports, designs, computations, computer programs, estimates, surveys, other data or work items, etc.) prepared under this AGREEMENT shall be submitted for approval to the CITY. All instruments of service shall be professionally sealed in accordance to applicable laws or at CITY's request.

E. Acceptance and approval of the PROJECT DOCUMENTS by the CITY shall not constitute nor be deemed a release of the responsibility and liability of ENGINEER, its employees, associates, agents and ENGINEERs for the accuracy or competency of their designs, working drawings and specifications, or other documents and work; nor shall such approval be deemed to be an assumption of such responsibility by the CITY for any defect in the designs, working drawings and specifications, or other documents prepared by ENGINEER, its employees, contractor, agents and ENGINEERs.

F. ENGINEER will retain the PROJECT DOCUMENTS for a period of three years following project completion. During this three year period, any requests for document recovery and reproduction will be assessed a fee in accordance with ENGINEER's FEES.

ARTICLE IX - SAFETY

A. CITY agrees to inform ENGINEER of any applicable site safety procedures and regulations known to CITY as well as any special safety concerns or dangerous conditions at the site of which the CITY is aware, which ENGINEER shall communicate to its employees. ENGINEER and its employees shall adhere to such procedures and regulations once notice has been given by the CITY.

B. Unless specifically provided in the SCOPE, ENGINEER shall not have any responsibility for overall job safety at the site. If in the ENGINEER's opinion, its field personnel are unable to access required locations or perform required services in conformance with applicable safety standards, ENGINEER may immediately suspend performance until such safety standards can be attained.

C. ENGINEER agrees to indemnify and hold harmless the CITY for any safety conditions that may arise out of ENGINEER's performance of this AGREEMENT.

ARTICLE X - TERMINATION

A. CITY may suspend or terminate this AGREEMENT for cause or without cause at any time by giving written notice to ENGINEER. In the event suspension or termination is without cause, payment to ENGINEER, in accordance with the terms of this AGREEMENT, will be made on the basis of services reasonably determined by the CITY to be satisfactorily performed to the date of suspension or termination. Such payment will be due upon delivery of all instruments of service to CITY.

B. Should the CITY require a modification of this AGREEMENT with the ENGINEER, and in the event the CITY and ENGINEER fail to agree upon a modification to this AGREEMENT, the CITY shall have the option of terminating this AGREEMENT and the ENGINEER's services hereunder at no additional cost other than the payment to ENGINEER, in accordance with the terms of this AGREEMENT, for the services reasonably determined by the CITY to be properly performed by ENGINEER prior to such termination date.

C. If, for whatever adequate funding is not made available by CITY to support or justify continuation of the level of services to be provided by ENGINEER under this AGREEMENT, CITY may terminate or reduce the amount of services to be provided by ENGINEER under this AGREEMENT. In such event, CITY will notify ENGINEER in writing at least thirty (30) days in advance of such termination or reduction of services for lack of funds.

D. In no event shall the CITY pay to ENGINEER fees for termination outside of payment for services reasonably determined by the City to be properly performed prior to termination.

ARTICLE XI - INDEMNIFICATION

A. For purposes of this AGREEMENT, ENGINEER agrees to indemnify, hold harmless the CITY, its officers and employees from any loss, damage, liability or expense, of any nature whatsoever to the extent caused by the negligence, willful misconduct, or other actionable fault of ENGINEER, its affiliates, subsidiaries, employees, agents, assignees, and subcontractors and their respective employees and agents. ENGINEER is not required hereunder to defend the CITY, its officers, appointees, employees, or agents from assertions that they were negligent, nor to indemnify and hold them harmless from liability based on the CITY's negligence

B. Nothing contained herein shall waive any governmental immunity CITY may be entitled to by law.

C. This provision shall survive the termination of this AGREEMENT.

ARTICLE XII - CONTINGENCY CLAUSE

A. The CITY may add a contingency amount to the contract to cover additional services as described in APPENDIX B. Any use of such contingency funds for additional services shall be executed as an AMENDMENT to this AGREEMENT.

B. The Contingency shall in no manner substitute for an official AMENDMENT.

ARTICLE XIII - RELATIONSHIP OF THE PARTIES

It is understood and agreed by and between the parties that the ENGINEER, in satisfying the conditions of this AGREEMENT, is acting independently, and that the CITY assumes no responsibility or liabilities to any third party in connection with ENGINEER's actions. All services to be performed by the ENGINEER pursuant to this AGREEMENT shall be in the capacity of an Independent Contractor, and not as an agent or employee of CITY. The ENGINEER shall supervise the performance of its services and shall be entitled to control the manner and means by which its services are to be performed, subject to the terms of this AGREEMENT. There is no intended third party beneficiary to the AGREEMENT and nothing contained herein shall create a contractual relationship with, or any rights in favor of, any third party.

ARTICLE XIV - DISPUTE RESOLUTION

A. CITY and ENGINEER agree that disputes relative to the services will first be addressed by negotiations between the Parties. If direct negotiations fail to resolve the dispute, the Party initiating the claim that is the basis for dispute may take such steps as it deems necessary to protect its interests; provided, however, that notwithstanding any such dispute, ENGINEER will proceed with the services as per this AGREEMENT as if no dispute existed, and CITY will continue to make payment for ENGINEER's completed services; and provided further that no dispute will be submitted to arbitration without both Parties' express written consent.

ARTICLE XV - OPINIONS OF PROBABLE COST

A. Since the ENGINEER has no control over the cost of labor, materials, equipment or services furnished by others, or over methods of determining prices, or over competitive bidding or market conditions, the ENGINEER's estimates of PROJECT costs and construction costs provided for herein are to be made on the basis of the ENGINEER's experience and qualifications and represent the ENGINEER's judgement in accordance with the "Standard of Care". The ENGINEER cannot and does not guarantee that proposals, bids or actual PROJECT or construction costs will not vary from estimates prepared by the ENGINEER.

B. The CITY understands that the construction cost estimates developed by the ENGINEER do not establish a limit for construction contract amount. If the actual amount of the low construction bid exceeds the construction budget established by the CITY, the ENGINEER will not be required to re-design the PROJECT or any part thereof without additional compensation.

ARTICLE XVI - APPLICABLE LAWS

ENGINEER shall comply with all Federal, State, Local laws, ordinances, resolutions, specifications, regulations and all other laws or regulations relating or applicable to service to be performed under this AGREEMENT. Interpretation of this AGREEMENT and disputes arising out of or related to this AGREEMENT will be subject to and governed by the laws of the State of Arkansas. Jurisdiction and venue for any suit arising out of or related to this AGREEMENT will be in the District Court of Benton County, Arkansas,

ARTICLE XVII - PRECEDENCE

This AGREEMENT shall take precedence over any inconsistent of contradictory provisions contained in any proposal, contract, purchase order, requisition, notice to proceed, or any other like document regarding the PROJECT or ENGINEER's services.

ARTICLE XVIII - SEVERABILITY

A. In the event that one or more provisions contained herein shall, for any reason, be deemed invalid, illegal, void or unenforceable, in whole or in part, the remaining provisions hereof shall remain in full force and effect.

B. In the event that any provision hereof is in conflict with any statutory provision of the State of Arkansas, said provision, which may be in conflict therewith, shall be deemed inoperative, null and void insofar as it may be in conflict therewith, and shall be deemed modified to conform to such statutory provisions; provided, however, that the remaining provisions of this AGREEMENT will be unaffected and will continue to be valid and enforceable.

ARTICLE XIX - SURVIVAL OF OBLIGATIONS

The obligations of the Parties contained in this AGREEMENT, which by their nature survive after the term of the AGREEMENT, shall survive the termination or expiration of this AGREEMENT and continue indefinitely or as otherwise provided by this AGREEMENT.

ARTICLE XIX – ENTIRE AGREEMENT

This AGREEMENT, including all documents and Appendices included by reference herein, constitutes the entire agreement between the PARTIES and supersedes all prior agreements, whether oral or written, covering the same subject matter. This AGREEMENT may not be modified or amended except in writing, mutually agreed upon and accepted by both PARTIES to this AGREEMENT.

The cost of this AGREEMENT including all reimbursable expenses as described in the FEES AND SCHEDULE, **shall not exceed:**

Fifty four thousand and two hundred dollars and 00/100

$ 54,200.00, unless otherwise approved by the CITY through an official AMENDMENT agreed and executed by CITY and ENGINEER.

IN WITNESS THEREOF, the CITY and ENGINEER have executed this AGREEMENT, the EFFECTIVE DATE of which is indicated on page 1 of this AGREEMENT.

CITY OF BENTONVILLE	**Pollution Management, Inc.**
CITY	ENGINEER
BY	BY
MAYOR	**Principal – Engineering Division**
TITLE	TITLE
DATE SIGNED	DATE SIGNED

APPENDIX A
PROJECT DESCRIPTION

BASIC PROJECT INFORMATION: REROUTE STORMWATER TO NEW COLLECTION SYSTEM.

APPENDIX B

SCOPE OF SERVICES

SERVICES BY THE CITY

- Furnish required information and approvals and perform responsibilities and activities in a timely manner to facilitate orderly progress of the work.
- Provide criteria and information as to the requirements for the PROJECT, including design objectives and constraints, right-of-way, capacity and performance requirements, and any budgetary limitations.
- Furnish copies of design and construction standards that the CITY will require to be included in the drawings and specifications.
- Assist the ENGINEER by placing at their disposal all available information pertinent to the PROJECT, including previous reports and other data relative to design or construction of the PROJECT.
- Arrange for access to public and private property as required for the PROJECT.
- Obtain the necessary lands, easements and rights-of-way for the PROJECT.
- Reimburse all plan review, advertising costs, permits and approvals in connection with the PROJECT.
- Pay the ENGINEER is accordance with the terms of the AGREEMENT.

If the CITY observes or otherwise becomes aware of any fault or defect in the PROJECT, the CITY shall give prompt written notice thereof to the ENGINEER.

SERVICES BY THE ENGINEER

- Meet all requirements of the AGREEMENT including any AMENDMENTS.
- Produce all documents and services needed for the PROJECT, including but not limited to:

  Topographical surveys, Right-of-Way Surveys, Utility Surveys and Coordination, Traffic Study, Geotechnical Investigations, Environmental Surveys, Permitting, Major Drainage Study, Conceptual Design Phase (30%), Preliminary Design Phase (60%), Final Design Phase (90%), Public Meetings, Bidding Services, Construction Support Services, Project Management Services, Project Closeout.
- Project Management services for the entire life of the project that align with the Project Management Institute Project Management Book of Knowledge Latest Edition.
- All Design and Construction shall conform to Federal, State and Local regulations.
- Coordinate PROJECT with Franchise Utility Companies to assure adequate space for all facilities and timely relocations.
- Coordinate and Furnish approvals and permits from all Regulatory Agencies having jurisdiction over the PROJECT.
- Provide all services relevant to City of Bentonville Plan Review procedures.
- Create and provide all documents for property acquisitions and assist with any layout or staking required.
- Coordinate and facilitate meetings with CITY and Agencies for plan review, project coordination and right-of-way.
- Subcontracting of services by the ENGINEER shall have prior approval of the CITY.

APPENDIX C

SCHEDULE OF FEES AND SERVICES, KEY MILESTONES, AND DURATIONS FOR MAJOR TASKS

Appendix C - Cost Proposal

Project: SE Henry and F
Location: Bentonville, AR

A. Stormwater Improvements Engineering

	Task	Engineer IV $165.00	Engineer III $145.00	Engineer II $125.00	Field Services Tech $45.00	Total Hours	Total Cost
1.	Site Investigation & Planning Phase	16	4			20	$3,220.00
2.	Perform Hydrologic and Hydraulic Analysis	8	6	16		30	$4,190.00
3.	Develop Plans & Specifications	24	60	80		164	$22,660.00
4.	Assist with Project Bidding		4			4	$580.00
5.	Construction Support Services	8	16	16	240	40	$16,440.00
6.	Project Management & Closeout	8	2	16		26	$3,610.00
	Total Hours	64	92	128	240	284	
	Total Cost Item A.	$10,560.00	$13,340.00	$16,000.00	$10,800.00		**$50,700.00**

B. Reimbursable Costs

	Item	Cost/Unit	Units	Total Cost
1.	Topographic & Boundary Surveys	$2,500.00	1	$2,500.00
2.	Mileage & Miscellaneous Costs	$1,000.00	1	$1,000.00
	Total Cost Item B.			**$3,500.00**

C. Project Summary

A.	Stormwater Improvements Engineering	$50,700.00
B.	Reimbursable Costs	$3,500.00
	Total Project Cost	**$54,200.00**

RESOLUTION NO. _____

A RESOLUTION AUTHORIZING THE MAYOR TO ENTER INTO AN AGREEMENT WITH POLLUTION MANAGEMENT, INC., FOR ENGINEERING AND PROJECT SERVICES FOR SE HENRY AND F STREET.

NOW, THEREFORE, BE IT RESOLVED BY THE CITY COUNCIL FOR THE CITY OF BENTONVILLE, ARKANSAS.

Section 1: That the Mayor be and is hereby authorized to enter into an agreement with Pollution Management, Inc. for engineering and project services for SE Henry and F Drainage in an amount of $54,200 as set forth in the Professional Services Agreement attached hereto as Exhibit "A".

Section 2: This resolution shall be in full force and effect from and after the date of its passage.

PASSED and APPROVED this _____ day of _____, 2021.

APPROVED:

_____
MAYOR

ATTEST:

_____
CITY CLERK

Agenda Item Form

Date of City Council Meeting	**6/22/2021**
Department	**Engineering**
Submitted by	**Dan Weese**
Phone	**(479) 254-2024**

Item Type: (*Check Applicable Item Type*)

☐ Budget Adjustment	☐ Change Order	☐ Informational	☐ Ordinance	☑ Resolution	☐ Bid Award

Recommendation/Suggested Action *(Enter recommendation in space below)*:

Resolution allowing the Mayor to enter into a professional services agreement with McClelland Consulting Engineers, Inc. for engineering and project services for NW 8th & F Drainage. The cost of this contract will be $139,520.00. This Firm was selected following the City's standard RFQ solicitation and selection process for the procurement of professional services in accordance with state law.

Estimated Cost	**$139,520**
Is this Item Budgeted?	☐ Yes ☑ No

If no, please explain how item will be funded *(briefly explain in space below)* **:**

This project is part of the Bond program.

Memorandum

To: Mayor and City Council

From: Dan Weese, City Engineer

Date: Tuesday, June 8, 2021

Re: PSA for NW 8th & F Drainage

Project Description: New storm drain collection system that will provide drainage improvements for 20 homes.

McClelland Consulting Engineers, Inc. has been selected to perform all related engineering services needed for this project. This Professional Services Agreement (PSA) amount for this project is $139,520.00.

Staff requests approval of a resolution allowing the Mayor to enter into a PSA with McClelland Consulting Engineers, Inc. for this project.

Please contact me with any questions or concerns regarding this PSA or the project as a whole. My telephone number is (479) 254-2024 or I can be reached via email at dweese@bentonvillear.com

PROFESSIONAL SERVICES AGREEMENT

PROJECT NAME: NW 8TH & F DRAINAGE ("PROJECT")

Munis # 21EN0008

THIS AGREEMENT ("AGREEMENT") is made in Benton County, Arkansas, by and between the City of Bentonville, Arkansas, hereinafter referred to as "CITY", and MCCLELLAND CONSULTING ENGINEERS, INC., hereinafter referred to as "ENGINEER" (collectively, the "PARTIES").

The PARTIES have caused this AGREEMENT to be effective this ____day of _____, 2021 ("EFFECTIVE DATE").

RECITALS:

A. WHEREAS, the CITY has a need to perform capital improvement projects for the City of Bentonville, Arkansas; and

B. WHEREAS, The CITY has selected the ENGINEER and negotiated this AGREEMENT using the procedures as set forth in Ark. Code Ann. § 19-11-800; and

C. WHEREAS, the CITY wishes to contract for Professional Services; and

D. WHEREAS, The ENGINEER has the skill, experience, ability, background, certifications and knowledge to provide these services; and

E. WHEREAS, The ENGINEER wishes to perform such professional services under this AGREEMENT with the CITY.

NOW, THEREFORE, in consideration of the terms in this AGREEMENT, the CITY and ENGINEER agree to the following:

ARTICLE I - PROJECT DESCRIPTION

The PROJECT shall be as described in APPENDIX A. "Project Description", attached hereto and incorporated herein by reference.

ARTICLE II - SCOPE OF SERVICE

Upon issuance of a written Notice to Proceed by the CITY, ENGINEER agrees to provide the CITY the necessary professional services related to the PROJECT, as set forth in APPENDIX B, "Scope of Services" ("SCOPE"), attached hereto and incorporated herein by reference.

ARTICLE III - STANDARD OF CARE

ENGINEER shall at all times material hereto adhere to the generally accepted standard of care typically exhibited by similarly situated professionals performing similar scope(s) of service on projects of like size, scope, nature, cost, schedule, and complexity, at the same time and in the same general regional locale ("Standard of Care").

ARTICLE IV - ADDITIONAL SERVICES

A. Any service outside of the work described herein or included by reference hereto must be pre-approved by the CITY and executed as an AMENDMENT to this AGREEMENT by the Parties prior to any such work being completed; any such AMENDMENT shall be in accordance with the CITY'S purchasing laws and guidelines and may require approval from the Bentonville City Council.

B. ENGINEER shall make no claims for additional services or changes in the services until an AMENDMENT has been fully executed by the Parties.

ARTICLE V - SCHEDULE OF FEES, SERVICES AND PAYMENT

A. The term of this AGREEMENT shall commence on the EFFECTIVE DATE and shall proceed in accordance with APPENDIX C, "Schedule of Fees and Services, Key Milestones, and Durations for Major Tasks", attached hereto and incorporated herein by reference.

B. The cost of this AGREEMENT shall be in accordance with APPENDIX C.

C. CITY agrees to pay ENGINEER for all services authorized by inclusion in this AGREEMENT which have been properly performed by ENGINEER in accordance with this AGREEMENT.

D. All fees paid to ENGINEER shall be based on invoices submitted by ENGINEER for work performed under this AGREEMENT, less any previous payments. ENGINEER shall submit invoices for services related to this AGREEMENT on a monthly basis.

E. CITY reserves the right to delay, without penalty, any partial payment when, in the opinion of the CITY, ENGINEER has not made satisfactory progress on the Project based on the SCOPE. If CITY objects to any portion of an invoice, the CITY shall notify ENGINEER and shall pay all other portions of the invoice which are not in dispute. In the event of dispute, CITY and ENGINEER shall immediately make every effort to settle the disputed portion of the invoice.

F. In the event that the CITY becomes credibly informed that any representations of ENGINEER provided in its invoicing are wholly or partially inaccurate, CITY may withhold payment of sums then, or in the future, otherwise due to ENGINEER until the inaccuracy and the cause thereof is corrected to the CITY's reasonable satisfaction.

G. If the CITY fails to make any payment, not in dispute, due to ENGINEER within thirty (30) days after receipt of an invoice, then the amount due to the ENGINEER will increase at the lesser of one percent (1 %) per month or the maximum amount allowed by law after the 30th day. In addition, ENGINEER may, after giving seven (7) days' written notice to CITY, suspend its services and any deliverables until ENGINEER has been paid in full for all amounts outstanding more than thirty (30) days.

ARTICLE VI - INSURANCE

A. ENGINEER shall during the term hereof maintain in full force and effect the following insurance:

1. A comprehensive general liability policy of insurance for bodily injury, death and property damage insuring against all claims, demands or actions relating to the ENGINEER's performance of services pursuant to this AGREEMENT with a combined single limit of not less than $1,000,000.00 per occurrence and $2,000,000 in the aggregate for injury to persons (including death), and for property damage;
2. A policy of automobile liability insurance covering any vehicles owned and/or operated by ENGINEER, its officers, agents, and employees, and used in the performance of this AGREEMENT with policy limits of not less than $1,000,000.00 combined single limit and aggregate for bodily injury and property damage;
3. Statutory Worker's Compensation Insurance at the statutory limits and Employers Liability covering all of ENGINEER's employees involved in the provision of services under this AGREEMENT with policy limit of not less than $1,000,000.00; and
4. Professional Liability/Errors and Omissions coverage covering negligent acts, errors and omissions in the performance of professional services with policy limit of not less than $1,000,000.00.

B. All insurance and certificate(s) of insurance shall contain the following provisions:

1. Include CITY as additional insured as to all applicable coverage with the exception of Workers Compensation Insurance and Professional Liability/Errors and Omissions coverage; and
2. provide for at least thirty (30) days prior written notice to CITY for cancellation or non-renewal of the insurance;
3. provide for a waiver of subrogation against CITY for injuries, including death, property damage, or any other loss to the extent the same is covered by the proceeds of insurance, except for Professional Liability/Errors and Omissions coverage.

C. ENGINEER shall provide 30 day written notice to CITY of any material change of or to the insurance required herein.

D. All insurance companies providing the required insurance shall be authorized to transact business in Arkansas and rated at least "A" by AM Best or other equivalent rating service. A certificate of insurance evidencing the required insurance and all endorsements required by this Agreement shall be submitted prior to commencement of services.

E. In the event that additional or greater insurance requirements are warranted, these requirements shall be included as an Appendix, which will be attached hereto and incorporated by reference.

ARTICLE VII - RIGHT OF ACCESS

A. CITY will obtain and/or furnish right-of-access for ENGINEER to perform any required studies, surveys, tests or other necessary investigations in relation to the PROJECT.

B. ENGINEER will take reasonable precautions to minimize damage to the personal or real property in the performance of such surveys, tests, studies and investigations.

C. CITY recognizes that ENGINEER's operations and use of equipment may unavoidably alter existing conditions or affect the environment at the PROJECT site. The cost of repairing such damage shall be the responsibility of ENGINEER, at no additional cost to the CITY. In the event that ENGINEER fails to correct such damages, CITY is entitled to utilize CITY forces or other labor to repair the damage; any costs incurred by CITY for such work shall be deducted from the monies due to ENGINEER.

ARTICLE VIII - RECORDS AND RETENTION

A. All surveys, studies, proposals, applications, drawings, plans, specifications and other documents, including those in electronic form, prepared by ENGINEER and its ENGINEERs, subcontractors, agents, representatives, and/or employees in connection with this AGREEMENT ("PROJECT DOCUMENTS") are intended for the use and benefit of CITY. ENGINEER and its ENGINEERs, subcontractors, agents, representatives, and/or employees shall be deemed the authors of their respective part of the PROJECT DOCUMENTS. Notwithstanding anything to the contrary, CITY shall own, have, and retain all rights, title and interest in and to all PROJECT DOCUMENTS, whether in draft form or final form, which are produced at CITY's request or otherwise produced from ENGINEER's performance of the work described herein for CITY. The CITY's ownership of PROJECT DOCUMENTS shall not apply to ENGINEER's proprietary standard details that were developed by the ENGINEER prior to the commencement of this PROJECT.

B. CITY shall have full authority to reuse, reproduce, publish, disclose and distribute PROJECT DOCUMENTS, as needed, according to Arkansas State Law.

C. ENGINEER shall, upon completion of the services and full payment for the ENGINEER'S services by the CITY, or earlier termination and appropriate compensation as provided by this AGREEMENT, provide the CITY with all PROJECT DOCUMENTS prepared by ENGINEER pursuant to this AGREEMENT in formats requested by the CITY.

D. All instruments of service (including plans, specifications, drawings, reports, designs, computations, computer programs, estimates, surveys, other data or work items, etc.) prepared under this AGREEMENT shall be submitted for approval to the CITY. All instruments of service shall be professionally sealed in accordance to applicable laws or at CITY's request.

E. Acceptance and approval of the PROJECT DOCUMENTS by the CITY shall not constitute nor be deemed a release of the responsibility and liability of ENGINEER, its employees, associates, agents and ENGINEERs for the accuracy or competency of their designs, working drawings and specifications, or other documents and work; nor shall such approval be deemed to be an assumption of such responsibility by the CITY for any defect in the designs, working drawings and specifications, or other documents prepared by ENGINEER, its employees, contractor, agents and ENGINEERs.

F. ENGINEER will retain the PROJECT DOCUMENTS for a period of three years following project completion. During this three-year period, any requests for document recovery and reproduction will be assessed a fee in accordance with ENGINEER's FEES.

ARTICLE IX - SAFETY

A. CITY agrees to inform ENGINEER of any applicable site safety procedures and regulations known to CITY as well as any special safety concerns or dangerous conditions at the site of which the CITY is aware, which ENGINEER shall communicate to its employees. ENGINEER and its employees shall adhere to such procedures and regulations once notice has been given by the CITY.

B. Unless specifically provided in the SCOPE, ENGINEER shall not have any responsibility for overall job safety at the site. If in the ENGINEER's opinion, its field personnel are unable to access required locations or perform required services in conformance with applicable safety standards, ENGINEER may immediately suspend performance until such safety standards can be attained.

C. ENGINEER agrees to indemnify and hold harmless the CITY for any safety conditions that may arise out of ENGINEER's performance of this AGREEMENT.

ARTICLE X - TERMINATION

A. CITY may suspend or terminate this AGREEMENT for cause or without cause at any time by giving written notice to ENGINEER. In the event suspension or termination is without cause, payment to ENGINEER, in accordance with the terms of this AGREEEMENT, will be made on the basis of services reasonably determined by the CITY to be satisfactorily performed to the date of suspension or termination. Such payment will be due upon delivery of all instruments of service to CITY.

B. Should the CITY require a modification of this AGREEMENT with the ENGINEER, and in the event the CITY and ENGINEER fail to agree upon a modification to this AGREEMENT, the CITY shall have the option of terminating this AGREEMENT and the ENGINEER's services hereunder at no additional cost other than the payment to ENGINEER, in accordance with the terms of this AAGREEMENT, for the services reasonably determined by the CITY to be properly performed by ENGINEER prior to such termination date.

C. If, for whatever adequate funding is not made available by CITY to support or justify continuation of the level of services to be provided by ENGINEER under this AGREEMENT, CITY may terminate or reduce the amount of services to be provided by ENGINEER under this AGREEMENT. In such event, CITY will notify ENGINEER in writing at least thirty (30) days in advance of such termination or reduction of services for lack of funds.

D. In no event shall the CITY pay to ENGINEER fees for termination outside of payment for services reasonably determined by the City to be properly performed prior to termination.

ARTICLE XI - INDEMNIFICATION

A. For purposes of this AGREEMENT, ENGINEER agrees to indemnify, hold harmless the CITY, its officers and employees from any loss, damage, liability or expense, of any nature whatsoever to the extent caused by the negligence, willful misconduct, or other actionable fault of ENGINEER, its affiliates, subsidiaries, employees, agents, assignees, and subcontractors and their respective employees and agents. ENGINEER is not required hereunder to defend the CITY, its officers, appointees, employees, or agents from assertions that they were negligent, nor to indemnify and hold them harmless from liability based on the CITY's negligence

B. Nothing contained herein shall waive any governmental immunity CITY may be entitled to by law.

C. This provision shall survive the termination of this AGREEMENT.

ARTICLE XII - CONTINGENCY CLAUSE

A. The CITY may add a contingency amount to the contract to cover additional services as described in APPENDIX B. Any use of such contingency funds for additional services shall be executed as an AMENDMENT to this AGREEMENT.

B. The Contingency shall in no manner substitute for an official AMENDMENT.

ARTICLE XIII - RELATIONSHIP OF THE PARTIES

It is understood and agreed by and between the parties that the ENGINEER, in satisfying the conditions of this AGREEMENT, is acting independently, and that the CITY assumes no responsibility or liabilities to any third party in connection with ENGINEER's actions. All services to be performed by the ENGINEER pursuant to this AGREEMENT shall be in the capacity of an Independent Contractor, and not as an agent or employee of CITY. The ENGINEER shall supervise the performance of its services and shall be entitled to control the manner and means by which its services are to be performed, subject to the terms of this AGREEMENT. There is no intended third party beneficiary to the AGREEMENT and nothing contained herein shall create a contractual relationship with, or any rights in favor of, any third party.

ARTICLE XIV - DISPUTE RESOLUTION

A. CITY and ENGINEER agree that disputes relative to the services will first be addressed by negotiations between the Parties. If direct negotiations fail to resolve the dispute, the Party initiating the claim that is the basis for dispute may take such steps as it deems necessary to protect its interests; provided, however, that notwithstanding any such dispute, ENGINEER will proceed with the services as per this AGREEMENT as if no dispute existed, and CITY will continue to make payment for ENGINEER's completed services; and provided further that no dispute will be submitted to arbitration without both Parties' express written consent.

ARTICLE XV - OPINIONS OF PROBABLE COST

A. Since the ENGINEER has no control over the cost of labor, materials, equipment or services furnished by others, or over methods of determining prices, or over competitive bidding or market conditions, the ENGINEER's estimates of PROJECT costs and construction costs provided for herein are to be made on the basis of the ENGINEER's experience and qualifications and represent the ENGINEER's judgement in accordance with the "Standard of Care". The ENGINEER cannot and does not guarantee that proposals, bids or actual PROJECT or construction costs will not vary from estimates prepared by the ENGINEER.

B. The CITY understands that the construction cost estimates developed by the ENGINEER do not establish a limit for construction contract amount. If the actual amount of the low construction bid exceeds the construction budget established by the CITY, the ENGINEER will not be required to re-design the PROJECT or any part thereof without additional compensation.

ARTICLE XVI - APPLICABLE LAWS

ENGINEER shall comply with all Federal, State, Local laws, ordinances, resolutions, specifications, regulations and all other laws or regulations relating or applicable to service to be performed under this AGREEMENT. Interpretation of this AGREEMENT and disputes arising out of or related to this AGREEMENT will be subject to and governed by the laws of the State of Arkansas. Jurisdiction and venue for any suit arising out of or related to this AGREEMENT will be in the District Court of Benton County, Arkansas,

ARTICLE XVII - PRECEDENCE

This AGREEMENT shall take precedence over any inconsistent of contradictory provisions contained in any proposal, contract, purchase order, requisition, notice to proceed, or any other like document regarding the PROJECT or ENGINEER's services.

ARTICLE XVIII - SEVERABILITY

A. In the event that one or more provisions contained herein shall, for any reason, be deemed invalid, illegal, void or unenforceable, in whole or in part, the remaining provisions hereof shall remain in full force and effect.

B. In the event that any provision hereof is in conflict with any statutory provision of the State of Arkansas, said provision, which may be in conflict therewith, shall be deemed inoperative, null and void insofar as it may be in conflict therewith, and shall be deemed modified to conform to such statutory provisions; provided, however, that the remaining provisions of this AGREEMENT will be unaffected and will continue to be valid and enforceable.

ARTICLE XIX - SURVIVAL OF OBLIGATIONS

The obligations of the Parties contained in this AGREEMENT, which by their nature survive after the term of the AGREEMENT, shall survive the termination or expiration of this AGREEMENT and continue indefinitely or as otherwise provided by this AGREEMENT.

ARTICLE XX – ENTIRE AGREEMENT

This AGREEMENT, including all documents and Appendices included by reference herein, constitutes the entire agreement between the PARTIES and supersedes all prior agreements, whether oral or written, covering the same subject matter. This AGREEMENT may not be modified or amended except in writing, mutually agreed upon and accepted by both PARTIES to this AGREEMENT.

The cost of this AGREEMENT including all reimbursable expenses as described in the FEES AND SCHEDULE, **shall not exceed** One Hundred Thirty-Nine Thousand Five Hundred Twenty Dollars ($139,520.00.), unless otherwise approved by the CITY through an official AMENDMENT agreed and executed by CITY and ENGINEER.

IN WITNESS THEREOF, the CITY and ENGINEER have executed this AGREEMENT, the EFFECTIVE DATE of which is indicated on page 1 of this AGREEMENT.

CITY OF BENTONVILLE	**MCCLELLAND CONSULTING ENGINEERS, INC.**
CITY	ENGINEER
	[redacted]
BY	BY
MAYOR	**VICE PRESIDENT**
TITLE	TITLE
	06.04.2021
DATE SIGNED	DATE SIGNED

Kevin Beaumont Date: 2021.06.04 16:56:17-05'00'

APPENDIX A

PROJECT DESCRIPTION

BASIC PROJECT INFORMATION:

CONSTRUCT A STORM WATER DRAINAGE COLLECTION SYSTEM INCLUDING CURB AND GUTTER AND SIDEWALK (DDT. ALT IN BID) ALONG A PORTION OF NW 9TH STREET, NW 8TH STREET, BELLA VISTA ROAD AND NW 9TH STREET.

APPENDIX B

SCOPE OF SERVICES

SERVICES BY THE CITY

- Furnish required information and approvals and perform responsibilities and activities in a timely manner to facilitate orderly progress of the work.
- Provide criteria and information as to the requirements for the PROJECT, including design objectives and constraints, right-of-way, capacity and performance requirements, and any budgetary limitations.
- Furnish copies of design and construction standards that the CITY will require to be included in the drawings and specifications.
- Assist the ENGINEER by placing at their disposal all available information pertinent to the PROJECT, including previous reports and other data relative to design or construction of the PROJECT.
- Arrange for access to public and private property as required for the PROJECT.
- Obtain the necessary lands, easements and rights-of-way for the PROJECT.
- Reimburse all plan review, advertising costs, permits and approvals in connection with the PROJECT.
- Pay the ENGINEER is accordance with the terms of the AGREEMENT.

If the CITY observes or otherwise becomes aware of any fault or defect in the PROJECT, the CITY shall give prompt written notice thereof to the ENGINEER.

SERVICES BY THE ENGINEER

- Meet all requirements of the AGREEMENT including any AMENDMENTS.
- Produce all documents and services needed for the PROJECT, including but not limited to:

  Topographical surveys, Right-of-Way Surveys, Utility Surveys and Coordination, Traffic Study, Geotechnical Investigations, Environmental Surveys, Permitting, Major Drainage Study, Conceptual Design Phase (30%), Preliminary Design Phase (60%), Final Design Phase (90%), Public Meetings, Bidding Services, Construction Support Services, Project Management Services, Project Closeout.
- Project Management services for the entire life of the project that align with the Project Management Institute Project Management Book of Knowledge Latest Edition.
- All Design and Construction shall conform to Federal, State and Local regulations.
- Coordinate PROJECT with Franchise Utility Companies to assure adequate space for all facilities and timely relocations.
- Coordinate and Furnish approvals and permits from all Regulatory Agencies having jurisdiction over the PROJECT.
- Provide all services relevant to City of Bentonville Plan Review procedures.
- Create and provide all documents for property acquisitions and assist with any layout or staking required.
- Coordinate and facilitate meetings with CITY and Agencies for plan review, project coordination and right-of-way.
- Subcontracting of services by the ENGINEER shall have prior approval of the CITY.
- Refer also to Appendix D attached for ENGINEER'S supplemental information.

APPENDIX C

SCHEDULE OF FEES AND SERVICES, KEY MILESTONES, AND DURATIONS FOR MAJOR TASKS

Task No.	Description	Estimated Fees
1	Topographic Survey	$ 8,500.00
2	Boundary Survey, Easements & Exhibits	$ 36,960.00
3	Engineering Design	$ 37,950.00
4	Project Management	$ 11,825.00
5	Appraisals & Acquisitions (By Others)	$ TBA
6	Advertising and Bidding Services	$ 1,500.00
7	Construction Administration	$ 5,750.00
8	Services During Construction (SDC)	$ 25,750.00
9	Materials Testing	$ 5,785.00
10	Reimbursables	$ 5,500.00
TOTAL ESTIMATED ENGINEERING COSTS		**$ 139,520.00**

Note: Total Estimated Engineering Costs excludes that of Appraisals & Acquisitions to be performed by sub-consultant(s), fee subject to City approval. For Schedule of Fees see Exhibit 2 attached for detailed information.

PROJECT TASKS & MILESTONES (See also Exhibit 1 overpage "Project Design & Construction Schedule"):

1. Topographic Survey = 9 weeks/ 2 months
2. Boundary Survey and Easements = 8 weeks/ 2 months
3. Engineering Design = 8 weeks/ 2 months (excludes City and ARDOT reviews)
4. Project Management = Duration of entire contract
5. Public Involvement = 2 * 2 days
6. Utility Coordination = Duration of entire contract
7. Advertising and Bidding Services = 8 weeks
8. Construction Admin & SDC = 15 weeks/3.75 months (Materials, Project Mgm't & Construction Obs)
9. Utility Relocations = Estimate 10 weeks/ 2.5 months (Timing TBA)
10. ROW/Easement Acquisitions = Estimate 5 months (Process start upon approval of 60% Submittal)
11. Total Estimated Design Duration = 18 weeks/4.5 months (excludes City and ARDOT reviews)
12. Total Estimated Construction Duration = 31 weeks/7.75 months (Bidding to Final Completion)

PROJECT DESIGN & CONSTRUCTION SCHEDULE

EXHIBIT 1

NW 8th St. and F Drainage

MCE | CITY OF BENTONVILLE | OTHERS

McCLELLAND CONSULTING ENGINEERS, INC.

PROPOSED PROJECT SCHEDULE - NW 8TH ST. AND F DRAINAGE

TASK #	PROJECT TASK	WEEKS
1	**Topographic Survey**	
	Field Survey	5 6 7 8
	Drafting and Review by PLS	9 10 11 12 13
2	**Boundary Survey and Easements**	
	Boundary Survey and Property Ownership Determination	9 10 11 12 13 14
	Preparation of Easements and Rights of Way	21 22 23 24
	Easements and Rights of Way Acquisition	24 25 26 27 28 29 30 32 34 36 38 40 42 43
3	**Design Drawings**	
	30% Design Submittal	14 15
	30% Design Review	16 17
	60% Design Submittal	18 19 20 21
	60% Design Review	22 23
	100% Design Submittal	24 25
	100% Design Review	26 27
4	**Project Management**	
	Weekly Reports, Internal Reviews and Closeout	
5	**Public Involvement Meeting**	
	Scheduling/Coordination	17 28
	PI Meeting	18 29
6	**Utility Coordination**	
	Utility Coordination Meeting and Coordination	18 29
	Relocations (By Others)	42 44 46 49 51
7	**Advertising and Bidding Services**	
	Advertisement Period	34 36
	Award and Preconstruction Meeting	40 42
8	**Services During Construction**	
	Construction Administration	50 52 54 56 58 60 62
	Project Closeout	62 64

APPENDIX D

ENGINEER'S SUPPLEMENTAL INFORMATION

ENGINEER'S ASSUMPTIONS & UNDERSTANDING OF PROJECT:

1. Water, Sanitary Sewer and Stormwater utility information is as presented on the City of Bentonville GIS website per the Master Public Map. It is anticipated that there will changes to this information, including alignments and sizes, once field locates have been completed and that these will be minor in nature.
2. Street improvements, other than drainage shall be in accordance with the local street designation as identified in the current version of the Master Street Plan, as approved on 01.21.2021, namely a street with 4' greenspace and 5' sidewalks on both sides of street for NW 8th St. and NW 9th St. and a street with 7' greenspace and 5' sidewalk and 12' sidepath.
3. Bike/ Pedestrian accommodations shall be in accordance with the Draft Bentonville Bike & Pedestrian Master Plan "Connecting Bentonville" dated January 2021.
4. Two public engagement meetings are included, along with preparation of color exhibits of project concept/ design OR a recorded engineering presentation to be posted on City website with feedback provided to them via mechanism/forum set up and managed by City.
5. Basis of ENGINEER's fee for Services During Construction (SDC) assumes a maximum of 50% site attendance for the duration of the construction phase. Actual hours worked on a daily basis will vary depending on the needs of the construction activities at that time.
6. ENGINEER shall invoice monthly for work completed using hourly rates in effect at time of execution of work. See attached hourly rate schedule.
7. Reimbursable expenses shall include actual expenses incurred directly or indirectly in connection with the project and shall include, but not be limited to: ARKUPS, Deed Searches, Permits, mileage etc.
8. ENGINEER shall make best efforts to ensure timely relocations of utilities by way of advance project meetings and written communications. ENGINEER shall not be responsible for delays associated with utility relocations and associated impact on project schedule when utilities are non-responsive.
9. All project correspondence and documentation including submittals shall be made electronically, unless otherwise requested.
10. Project services in addition to that stated above under heading "Services By The Engineer" shall also include:
    a) Survey Related (see details below)
    b) Construction Materials Testing & Special Inspection Services (see details below)

SURVEY RELATED:

i. **Boundary Resolution:** ENGINEER will complete records research, field research and boundary resolution of up to twenty-two (22) parcels along the specified route. The property lines of the parcel will be located and shown only on the topographic survey and exhibit maps. This scope does not include a separate boundary survey of each property. Total estimated cost $13,200.00.

ii. **Exhibit Maps & Descriptions:** ENGINEER will complete exhibit maps and descriptions for up to twenty-two (22) properties affected by the route of the proposed project. The exhibit maps will show any Rights-of-Way, easements, or temporary construction easements needed for each property, and will be accompanied by separate descriptions for each area.

- Payment for the exhibit maps and descriptions shall be on a lump sum basis per completed maps in the amount of $750/map, up to five (22) maps, for a total estimated cost of $16,500.00.

iii. **ROW/Easement Acquisition:** As part of ROW &/or easement acquisition process ENGINEER shall contract with and coordinate with licensed Real Estate Appraisal &/or Broker regards obtaining property appraisals to determine FMV of affected land as well as meeting with property owners to outline details of project and obtain signed legal agreement regards acquisition. ENGINEER shall coordinate with City regards agreement as to conditions and compensation being sought by individual property owners. The cost of this ROW/ Easement acquisition work shall be paid separately by the City removed from the scope of this agreement. ENGINEER shall obtain prior approval from City prior to entering into separate contract agreement with entity/entities responsible for this work. City shall undertake all legal actions necessary and be responsible for all costs associated with condemnation of property should the need arise.

iv. **Right-of-Way & Easement Stakeout:** ENGINEER will provide field stakeout of proposed right-of-way and easement lines as requested to assist with property acquisition for the project.

- Stakeout items include:
  - Proposed right-of-way and easement lines as shown on the Exhibit Maps that will be produced under the scope outlined in "Exhibit Maps & Descriptions" task above.
  - This proposal does not cover staking of any designed structures, changes, features, or centerline of route.
  - Staking services will be provided only as requested, on a per-parcel basis, to facilitate acquisition negotiations with affected landowners.
  - This proposal is only valid for the items specified herein and does not include the re-staking of any previously staked items.
  - Staking of any additional items not specified herein, or re-staking of any previously staked items will be considered additional work outside the scope of this proposal and will be billed at ENGINEER'S hourly rates. Hourly rates shall be in accordance with the most current hourly rate schedule for Survey Field Crew, Survey Technician and Professional Land Surveyor.
  - Estimated cost $7,260.00.

CONSTRUCTION MATERIALS TESTING & SPECIAL INSPECTION SERVICES:

It is anticipated that services for construction-materials testing and special inspections for the project will include proof roll observations/subgrade recommendations, soil and coarse aggregate base density testing, reinforcing bar observations, cast-in-place concrete testing, and asphalt testing. MCE would be happy to provide additional services relevant to the project that are not currently anticipated by this proposal, at the request of the Client at an agreed-upon unit price.

The fees for each service include travel time, mileage, reporting fees, and assume the following factors:

i. A Geotechnical Engineer/engineering technician spending one (1) hour onsite for proof-roll observation and/or subgrade recommendations regarding the building pad and pavement areas.

- Travel time, mileage, and report writing is factored into the unit trip price
- $275.00 per trip

ii. A certified technician spending 30 minutes onsite for each soil/base density testing trip

- Three (3) density tests being conducted per trip
- $215.00 per trip

iii. A Geotechnical Engineer or Engineering Technician spending one (1) hour onsite for the observation of reinforcing elements.

- $275.00 per trip

iv. A certified technician spending one (1) hour onsite for each cast-in-place concrete testing trip.

- MCE assumes that one (1) set of five (5) lab-cured 4" x 8" cylinders being sampled for every 50 cubic yards of concrete will satisfy testing frequency for the project based on project specifications.
- $305.00 per trip

v. A charge for concrete cylinder pick-up will only be applied in the event that it is the sole reason for the site visit on days where no other testing is scheduled. We have assumed that this will be required for approximately one-half (0.5) of the anticipated number of testing trips.

- $105.00 per trip

vi. A certified technician spending one (1) hour on-site to assist with establishing a rolling pattern during the placement of asphalt in pavement improvement areas.

- $215.00 per trip

vii. A certified technician spending three (3) hours on-site coring asphalt samples for laboratory testing. A minimum of four (4) cores will be required for bulk-specific gravity and thickness verification.

- $685.00 per trip

Based on provided project information, we expect that the project duration will be approximately two (2) months. From the assumptions and project details referenced above, we can provide construction materials testing and special inspections on this project for a Not-To-Exceed Without Approval amount as detailed below:

- Proof Roll Observations/Subgrade Recommendations $825.00
- Soil and Base Density Testing $2,795.00
- Reinforcing Observations..... $550.00

- Cast-in-Place Concrete Testing. $610.00
- Concrete Cylinder Pick-up $105.00
- Asphalt Rolling Pattern $215.00
- Asphalt Coring and Testing $685.00

Total Not-To-Exceed Without Approval Fee: $5,785.00

EXHIBIT 2

McCLELLAND CONSULTING ENGINEERS, INC.
DESIGNED TO SERVE

2021
McCLELLAND CONSULTING ENGINEERS, INC.
***STANDARD HOURLY RATES**

Chief Draftsman	$95 - $110
Clerical	$45 - $75
Construction Observer	$70 - $140
Draftsman	$65 - $95
Environmental Scientist/Designer	$105 - $120
Geotech Engineer	$85 - $170
HR/Payroll Admin	$75-$100
Landscape Architect	$90 - $140
Media Specialist	$80 - $100
Principal	$160 - $230
Project Accountant	$70 - $155
Project Designer	$80 - $140
Project Engineer	$120 - $175
Project Manager	$120 - $200
Registered Land Surveyor	$95 - $140
Soils Lab Technician	$50 - $135
Specification Writer	$50 - $90
Sr. Project Manager	$140 - $230
Survey (2 man or Robotic) Crew	$115 - $160
Survey (3 man) Crew	$135 - $195
Survey Field (1 Man or Rodman)	$45 - $105
Survey GPS	$75 - $130
Survey Technician	$65 - $95
Water Lab Supervisor	$70 - $120
Water Lab Tech	$50 - $95
Expenses	@ Cost
Mileage	.560/mi

** Standard Hourly Rates may be adjusted annually in accordance with the normal salary review practices of McClelland Consulting Engineers.*

RESOLUTION NO. _____

A RESOLUTION AUTHORIZING THE MAYOR TO ENTER INTO AN AGREEMENT WITH MCCLELLAND CONSULTING ENGINEERS, INC., FOR ENGINEERING AND PROJECT SERVICES FOR NW 8TH & F DRAINAGE.

NOW, THEREFORE, BE IT RESOLVED BY THE CITY COUNCIL FOR THE CITY OF BENTONVILLE, ARKANSAS.

Section 1: That the Mayor be and is hereby authorized to enter into an agreement with McClelland Consulting Engineers, Inc. for engineering and project services for NW 8th and F Drainage in an amount of $139,520 as set forth in the Professional Services Agreement attached hereto as Exhibit "A".

Section 2: This resolution shall be in full force and effect from and after the date of its passage.

PASSED and APPROVED this _____ day of _____, 2021.

APPROVED:

_____
MAYOR

ATTEST:

_____
CITY CLERK

Agenda Item Form

Date of City Council Meeting	**6/22/2021**
Department	**Engineering**
Submitted by	**Dan Weese**
Phone	**(479) 254-2024**

Item Type: (*Check Applicable Item Type*)					
☐ Budget Adjustment	☐ Change Order	☐ Informational	☐ Ordinance	☑ Resolution	☐ Bid Award

Recommendation/Suggested Action *(Enter recommendation in space below)*:

Resolution allowing the Mayor to enter into a professional services agreement with McClelland Consulting Engineers, Inc. for engineering and project services for SE Lateral D. The cost of this contract will be $74,475.00. This Firm was selected following the City's standard RFQ solicitation and selection process for the procurement of professional services in accordance with state law.

Estimated Cost	**$74,475**
Is this Item Budgeted?	☐ Yes ☑ No

If no, please explain how item will be funded *(briefly explain in space below)* **:**

This project is part of the Bond program.

Memorandum

To: Mayor and City Council

From: Dan Weese, City Engineer

Date: Tuesday, June 8, 2021

Re: PSA for SE D Lateral

Project Description: Extend the storm drainage collection system and add curb and gutter.

McClelland Consulting Engineers, Inc. has been selected to perform all related engineering services needed for this project. This Professional Services Agreement (PSA) amount for this project is $74,475.00.

Staff requests approval of a resolution allowing the Mayor to enter into a PSA with McClelland Consulting Engineers, Inc. for this project.

Please contact me with any questions or concerns regarding this PSA or the project as a whole. My telephone number is (479) 254-2024 or I can be reached via email at dweese@bentonvillear.com

PROFESSIONAL SERVICES AGREEMENT

PROJECT NAME: SE D LATERAL ("PROJECT")

Munis # 21EN0018

THIS AGREEMENT ("AGREEMENT") is made in Benton County, Arkansas, by and between the City of Bentonville, Arkansas, hereinafter referred to as "CITY", and MCCLELLAND CONSULTING ENGINEERS, INC., hereinafter referred to as "ENGINEER" (collectively, the "PARTIES").

The PARTIES have caused this AGREEMENT to be effective this ____day of _____, 2021 ("EFFECTIVE DATE").

RECITALS:

A. WHEREAS, the CITY has a need to perform capital improvement projects for the City of Bentonville, Arkansas; and

B. WHEREAS, The CITY has selected the ENGINEER and negotiated this AGREEMENT using the procedures as set forth in Ark. Code Ann. § 19-11-800; and

C. WHEREAS, the CITY wishes to contract for Professional Services; and

D. WHEREAS, The ENGINEER has the skill, experience, ability, background, certifications and knowledge to provide these services; and

E. WHEREAS, The ENGINEER wishes to perform such professional services under this AGREEMENT with the CITY.

NOW, THEREFORE, in consideration of the terms in this AGREEMENT, the CITY and ENGINEER agree to the following:

ARTICLE I - PROJECT DESCRIPTION

The PROJECT shall be as described in APPENDIX A. "Project Description", attached hereto and incorporated herein by reference.

ARTICLE II - SCOPE OF SERVICE

Upon issuance of a written Notice to Proceed by the CITY, ENGINEER agrees to provide the CITY the necessary professional services related to the PROJECT, as set forth in APPENDIX B, "Scope of Services" ("SCOPE"), attached hereto and incorporated herein by reference.

ARTICLE III - STANDARD OF CARE

ENGINEER shall at all times material hereto adhere to the generally accepted standard of care typically exhibited by similarly situated professionals performing similar scope(s) of service on projects of like size, scope, nature, cost, schedule, and complexity, at the same time and in the same general regional locale ("Standard of Care").

ARTICLE IV - ADDITIONAL SERVICES

A. Any service outside of the work described herein or included by reference hereto must be pre-approved by the CITY and executed as an AMENDMENT to this AGREEMENT by the Parties prior to any such work being completed; any such AMENDMENT shall be in accordance with the CITY'S purchasing laws and guidelines and may require approval from the Bentonville City Council.

B. ENGINEER shall make no claims for additional services or changes in the services until an AMENDMENT has been fully executed by the Parties.

ARTICLE V - SCHEDULE OF FEES, SERVICES AND PAYMENT

A. The term of this AGREEMENT shall commence on the EFFECTIVE DATE and shall proceed in accordance with APPENDIX C, "Schedule of Fees and Services, Key Milestones, and Durations for Major Tasks", attached hereto and incorporated herein by reference.

B. The cost of this AGREEMENT shall be in accordance with APPENDIX C.

C. CITY agrees to pay ENGINEER for all services authorized by inclusion in this AGREEMENT which have been properly performed by ENGINEER in accordance with this AGREEMENT.

D. All fees paid to ENGINEER shall be based on invoices submitted by ENGINEER for work performed under this AGREEMENT, less any previous payments. ENGINEER shall submit invoices for services related to this AGREEMENT on a monthly basis.

E. CITY reserves the right to delay, without penalty, any partial payment when, in the opinion of the CITY, ENGINEER has not made satisfactory progress on the Project based on the SCOPE. If CITY objects to any portion of an invoice, the CITY shall notify ENGINEER and shall pay all other portions of the invoice which are not in dispute. In the event of dispute, CITY and ENGINEER shall immediately make every effort to settle the disputed portion of the invoice.

F. In the event that the CITY becomes credibly informed that any representations of ENGINEER provided in its invoicing are wholly or partially inaccurate, CITY may withhold payment of sums then, or in the future, otherwise due to ENGINEER until the inaccuracy and the cause thereof is corrected to the CITY's reasonable satisfaction.

G. If the CITY fails to make any payment, not in dispute, due to ENGINEER within thirty (30) days after receipt of an invoice, then the amount due to the ENGINEER will increase at the lesser of one percent (1 %) per month or the maximum amount allowed by law after the 30th day. In addition, ENGINEER may, after giving seven (7) days' written notice to CITY, suspend its services and any deliverables until ENGINEER has been paid in full for all amounts outstanding more than thirty (30) days.

ARTICLE VI - INSURANCE

A. ENGINEER shall during the term hereof maintain in full force and effect the following insurance:

1. A comprehensive general liability policy of insurance for bodily injury, death and property damage insuring against all claims, demands or actions relating to the ENGINEER's performance of services pursuant to this AGREEMENT with a combined single limit of not less than $1,000,000.00 per occurrence and $2,000,000 in the aggregate for injury to persons (including death), and for property damage;
2. A policy of automobile liability insurance covering any vehicles owned and/or operated by ENGINEER, its officers, agents, and employees, and used in the performance of this AGREEMENT with policy limits of not less than $1,000,000.00 combined single limit and aggregate for bodily injury and property damage;
3. Statutory Worker's Compensation Insurance at the statutory limits and Employers Liability covering all of ENGINEER's employees involved in the provision of services under this AGREEMENT with policy limit of not less than $1,000,000.00; and
4. Professional Liability/Errors and Omissions coverage covering negligent acts, errors and omissions in the performance of professional services with policy limit of not less than $1,000,000.00.

B. All insurance and certificate(s) of insurance shall contain the following provisions:

1. Include CITY as additional insured as to all applicable coverage with the exception of Workers Compensation Insurance and Professional Liability/Errors and Omissions coverage; and
2. provide for at least thirty (30) days prior written notice to CITY for cancellation or non-renewal of the insurance;
3. provide for a waiver of subrogation against CITY for injuries, including death, property damage, or any other loss to the extent the same is covered by the proceeds of insurance, except for Professional Liability/Errors and Omissions coverage.

C. ENGINEER shall provide 30 day written notice to CITY of any material change of or to the insurance required herein.

D. All insurance companies providing the required insurance shall be authorized to transact business in Arkansas and rated at least "A" by AM Best or other equivalent rating service. A certificate of insurance evidencing the required insurance and all endorsements required by this Agreement shall be submitted prior to commencement of services.

E. In the event that additional or greater insurance requirements are warranted, these requirements shall be included as an Appendix, which will be attached hereto and incorporated by reference.

ARTICLE VII - RIGHT OF ACCESS

A. CITY will obtain and/or furnish right-of-access for ENGINEER to perform any required studies, surveys, tests or other necessary investigations in relation to the PROJECT.

B. ENGINEER will take reasonable precautions to minimize damage to the personal or real property in the performance of such surveys, tests, studies and investigations.

C. CITY recognizes that ENGINEER's operations and use of equipment may unavoidably alter existing conditions or affect the environment at the PROJECT site. The cost of repairing such damage shall be the responsibility of ENGINEER, at no additional cost to the CITY. In the event that ENGINEER fails to correct such damages, CITY is entitled to utilize CITY forces or other labor to repair the damage; any costs incurred by CITY for such work shall be deducted from the monies due to ENGINEER.

ARTICLE VIII - RECORDS AND RETENTION

A. All surveys, studies, proposals, applications, drawings, plans, specifications and other documents, including those in electronic form, prepared by ENGINEER and its ENGINEERs, subcontractors, agents, representatives, and/or employees in connection with this AGREEMENT ("PROJECT DOCUMENTS") are intended for the use and benefit of CITY. ENGINEER and its ENGINEERs, subcontractors, agents, representatives, and/or employees shall be deemed the authors of their respective part of the PROJECT DOCUMENTS. Notwithstanding anything to the contrary, CITY shall own, have, and retain all rights, title and interest in and to all PROJECT DOCUMENTS, whether in draft form or final form, which are produced at CITY's request or otherwise produced from ENGINEER's performance of the work described herein for CITY. The CITY's ownership of PROJECT DOCUMENTS shall not apply to ENGINEER's proprietary standard details that were developed by the ENGINEER prior to the commencement of this PROJECT.

B. CITY shall have full authority to reuse, reproduce, publish, disclose and distribute PROJECT DOCUMENTS, as needed, according to Arkansas State Law.

C. ENGINEER shall, upon completion of the services and full payment for the ENGINEER'S services by the CITY, or earlier termination and appropriate compensation as provided by this AGREEMENT, provide the CITY with all PROJECT DOCUMENTS prepared by ENGINEER pursuant to this AGREEMENT in formats requested by the CITY.

D. All instruments of service (including plans, specifications, drawings, reports, designs, computations, computer programs, estimates, surveys, other data or work items, etc.) prepared under this AGREEMENT shall be submitted for approval to the CITY. All instruments of service shall be professionally sealed in accordance to applicable laws or at CITY's request.

E. Acceptance and approval of the PROJECT DOCUMENTS by the CITY shall not constitute nor be deemed a release of the responsibility and liability of ENGINEER, its employees, associates, agents and ENGINEERs for the accuracy or competency of their designs, working drawings and specifications, or other documents and work; nor shall such approval be deemed to be an assumption of such responsibility by the CITY for any defect in the designs, working drawings and specifications, or other documents prepared by ENGINEER, its employees, contractor, agents and ENGINEERs.

F. ENGINEER will retain the PROJECT DOCUMENTS for a period of three years following project completion. During this three-year period, any requests for document recovery and reproduction will be assessed a fee in accordance with ENGINEER's FEES.

ARTICLE IX - SAFETY

A. CITY agrees to inform ENGINEER of any applicable site safety procedures and regulations known to CITY as well as any special safety concerns or dangerous conditions at the site of which the CITY is aware, which ENGINEER shall communicate to its employees. ENGINEER and its employees shall adhere to such procedures and regulations once notice has been given by the CITY.

B. Unless specifically provided in the SCOPE, ENGINEER shall not have any responsibility for overall job safety at the site. If in the ENGINEER's opinion, its field personnel are unable to access required locations or perform required services in conformance with applicable safety standards, ENGINEER may immediately suspend performance until such safety standards can be attained.

C. ENGINEER agrees to indemnify and hold harmless the CITY for any safety conditions that may arise out of ENGINEER's performance of this AGREEMENT.

ARTICLE X - TERMINATION

A. CITY may suspend or terminate this AGREEMENT for cause or without cause at any time by giving written notice to ENGINEER. In the event suspension or termination is without cause, payment to ENGINEER, in accordance with the terms of this AGREEEMENT, will be made on the basis of services reasonably determined by the CITY to be satisfactorily performed to the date of suspension or termination. Such payment will be due upon delivery of all instruments of service to CITY.

B. Should the CITY require a modification of this AGREEMENT with the ENGINEER, and in the event the CITY and ENGINEER fail to agree upon a modification to this AGREEMENT, the CITY shall have the option of terminating this AGREEMENT and the ENGINEER's services hereunder at no additional cost other than the payment to ENGINEER, in accordance with the terms of this AAGREEMENT, for the services reasonably determined by the CITY to be properly performed by ENGINEER prior to such termination date.

C. If, for whatever adequate funding is not made available by CITY to support or justify continuation of the level of services to be provided by ENGINEER under this AGREEMENT, CITY may terminate or reduce the amount of services to be provided by ENGINEER under this AGREEMENT. In such event, CITY will notify ENGINEER in writing at least thirty (30) days in advance of such termination or reduction of services for lack of funds.

D. In no event shall the CITY pay to ENGINEER fees for termination outside of payment for services reasonably determined by the City to be properly performed prior to termination.

ARTICLE XI - INDEMNIFICATION

A. For purposes of this AGREEMENT, ENGINEER agrees to indemnify, hold harmless the CITY, its officers and employees from any loss, damage, liability or expense, of any nature whatsoever to the extent caused by the negligence, willful misconduct, or other actionable fault of ENGINEER, its affiliates, subsidiaries, employees, agents, assignees, and subcontractors and their respective employees and agents. ENGINEER is not required hereunder to defend the CITY, its officers, appointees, employees, or agents from assertions that they were negligent, nor to indemnify and hold them harmless from liability based on the CITY's negligence

B. Nothing contained herein shall waive any governmental immunity CITY may be entitled to by law.

C. This provision shall survive the termination of this AGREEMENT.

ARTICLE XII - CONTINGENCY CLAUSE

A. The CITY may add a contingency amount to the contract to cover additional services as described in APPENDIX B. Any use of such contingency funds for additional services shall be executed as an AMENDMENT to this AGREEMENT.

B. The Contingency shall in no manner substitute for an official AMENDMENT.

ARTICLE XIII - RELATIONSHIP OF THE PARTIES

It is understood and agreed by and between the parties that the ENGINEER, in satisfying the conditions of this AGREEMENT, is acting independently, and that the CITY assumes no responsibility or liabilities to any third party in connection with ENGINEER's actions. All services to be performed by the ENGINEER pursuant to this AGREEMENT shall be in the capacity of an Independent Contractor, and not as an agent or employee of CITY. The ENGINEER shall supervise the performance of its services and shall be entitled to control the manner and means by which its services are to be performed, subject to the terms of this AGREEMENT. There is no intended third party beneficiary to the AGREEMENT and nothing contained herein shall create a contractual relationship with, or any rights in favor of, any third party.

ARTICLE XIV - DISPUTE RESOLUTION

A. CITY and ENGINEER agree that disputes relative to the services will first be addressed by negotiations between the Parties. If direct negotiations fail to resolve the dispute, the Party initiating the claim that is the basis for dispute may take such steps as it deems necessary to protect its interests; provided, however, that notwithstanding any such dispute, ENGINEER will proceed with the services as per this AGREEMENT as if no dispute existed, and CITY will continue to make payment for ENGINEER's completed services; and provided further that no dispute will be submitted to arbitration without both Parties' express written consent.

ARTICLE XV - OPINIONS OF PROBABLE COST

A. Since the ENGINEER has no control over the cost of labor, materials, equipment or services furnished by others, or over methods of determining prices, or over competitive bidding or market conditions, the ENGINEER's estimates of PROJECT costs and construction costs provided for herein are to be made on the basis of the ENGINEER's experience and qualifications and represent the ENGINEER's judgement in accordance with the "Standard of Care". The ENGINEER cannot and does not guarantee that proposals, bids or actual PROJECT or construction costs will not vary from estimates prepared by the ENGINEER.

B. The CITY understands that the construction cost estimates developed by the ENGINEER do not establish a limit for construction contract amount. If the actual amount of the low construction bid exceeds the construction budget established by the CITY, the ENGINEER will not be required to re-design the PROJECT or any part thereof without additional compensation.

ARTICLE XVI - APPLICABLE LAWS

ENGINEER shall comply with all Federal, State, Local laws, ordinances, resolutions, specifications, regulations and all other laws or regulations relating or applicable to service to be performed under this AGREEMENT. Interpretation of this AGREEMENT and disputes arising out of or related to this AGREEMENT will be subject to and governed by the laws of the State of Arkansas. Jurisdiction and venue for any suit arising out of or related to this AGREEMENT will be in the District Court of Benton County, Arkansas,

ARTICLE XVII - PRECEDENCE

This AGREEMENT shall take precedence over any inconsistent of contradictory provisions contained in any proposal, contract, purchase order, requisition, notice to proceed, or any other like document regarding the PROJECT or ENGINEER's services.

ARTICLE XVIII - SEVERABILITY

A. In the event that one or more provisions contained herein shall, for any reason, be deemed invalid, illegal, void or unenforceable, in whole or in part, the remaining provisions hereof shall remain in full force and effect.

B. In the event that any provision hereof is in conflict with any statutory provision of the State of Arkansas, said provision, which may be in conflict therewith, shall be deemed inoperative, null and void insofar as it may be in conflict therewith, and shall be deemed modified to conform to such statutory provisions; provided, however, that the remaining provisions of this AGREEMENT will be unaffected and will continue to be valid and enforceable.

ARTICLE XIX - SURVIVAL OF OBLIGATIONS

The obligations of the Parties contained in this AGREEMENT, which by their nature survive after the term of the AGREEMENT, shall survive the termination or expiration of this AGREEMENT and continue indefinitely or as otherwise provided by this AGREEMENT.

ARTICLE XX – ENTIRE AGREEMENT

This AGREEMENT, including all documents and Appendices included by reference herein, constitutes the entire agreement between the PARTIES and supersedes all prior agreements, whether oral or written, covering the same subject matter. This AGREEMENT may not be modified or amended except in writing, mutually agreed upon and accepted by both PARTIES to this AGREEMENT.

The cost of this AGREEMENT including all reimbursable expenses as described in the FEES AND SCHEDULE, **shall not exceed** Seventy-Four Thousand, Four Hundred & Seventy-Five Dollars ($ 74,475.00.), unless otherwise approved by the CITY through an official AMENDMENT agreed and executed by CITY and ENGINEER.

IN WITNESS THEREOF, the CITY and ENGINEER have executed this AGREEMENT, the EFFECTIVE DATE of which is indicated on page 1 of this AGREEMENT.

CITY OF BENTONVILLE	**MCCLELLAND CONSULTING ENGINEERS, INC.**
CITY	ENGINEER
	[redacted]
BY	BY
MAYOR	**VICE PRESIDENT**
TITLE	TITLE
	06.04.2021
DATE SIGNED	DATE SIGNED

Kevin Beaumont
Date: 2021.06.04 16:56:55-05'00'

APPENDIX A

PROJECT DESCRIPTION

BASIC PROJECT INFORMATION:

EXTEND THE STORM WATER DRAINAGE COLLECTION SYSTEM INCLUDING CURB & GUTTER AND SIDEWALK (DDT. ALT IN BID) ALONG A PORTION OF SE D STREET AND SE 4TH STREET.

APPENDIX B

SCOPE OF SERVICES

SERVICES BY THE CITY

- Furnish required information and approvals and perform responsibilities and activities in a timely manner to facilitate orderly progress of the work.
- Provide criteria and information as to the requirements for the PROJECT, including design objectives and constraints, right-of-way, capacity and performance requirements, and any budgetary limitations.
- Furnish copies of design and construction standards that the CITY will require to be included in the drawings and specifications.
- Assist the ENGINEER by placing at their disposal all available information pertinent to the PROJECT, including previous reports and other data relative to design or construction of the PROJECT.
- Arrange for access to public and private property as required for the PROJECT.
- Obtain the necessary lands, easements and rights-of-way for the PROJECT.
- Reimburse all plan review, advertising costs, permits and approvals in connection with the PROJECT.
- Pay the ENGINEER is accordance with the terms of the AGREEMENT.

If the CITY observes or otherwise becomes aware of any fault or defect in the PROJECT, the CITY shall give prompt written notice thereof to the ENGINEER.

SERVICES BY THE ENGINEER

- Meet all requirements of the AGREEMENT including any AMENDMENTS.
- Produce all documents and services needed for the PROJECT, including but not limited to:

  Topographical surveys, Right-of-Way Surveys, Utility Surveys and Coordination, Traffic Study, Geotechnical Investigations, Environmental Surveys, Permitting, Major Drainage Study, Conceptual Design Phase (30%), Preliminary Design Phase (60%), Final Design Phase (90%), Public Meetings, Bidding Services, Construction Support Services, Project Management Services, Project Closeout.
- Project Management services for the entire life of the project that align with the Project Management Institute Project Management Book of Knowledge Latest Edition.
- All Design and Construction shall conform to Federal, State and Local regulations.
- Coordinate PROJECT with Franchise Utility Companies to assure adequate space for all facilities and timely relocations.
- Coordinate and Furnish approvals and permits from all Regulatory Agencies having jurisdiction over the PROJECT.
- Provide all services relevant to City of Bentonville Plan Review procedures.
- Create and provide all documents for property acquisitions and assist with any layout or staking required.
- Coordinate and facilitate meetings with CITY and Agencies for plan review, project coordination and right-of-way.
- Subcontracting of services by the ENGINEER shall have prior approval of the CITY.
- Refer also to Appendix D attached for ENGINEER'S supplemental information.

APPENDIX C

SCHEDULE OF FEES AND SERVICES, KEY MILESTONES, AND DURATIONS FOR MAJOR TASKS

Task No.	Description	Estimated Fees
1	Topographic Survey	$ 3,400.00
2	Boundary Survey, Easements & Exhibits	$ 13,800.00
3	Engineering Design	$ 22,750.00
4	Project Management	$ 6,450.00
5	Appraisals & Acquisitions (By Others)	$ TBA
6	Advertising and Bidding Services	$ 1,500.00
7	Construction Administration	$ 3,250.00
8	Services During Construction (SDC)	$ 17,500.00
9	Materials Testing	$ 3,325.00
10	Reimbursables	$ 2,500.00
TOTAL ESTIMATED ENGINEERING COSTS		**$ 74,475.00**

Note: Total Estimated Engineering Costs excludes that of Appraisals & Acquisitions to be performed by sub-consultant(s), fee subject to City approval. For Schedule of Fees see Exhibit 2 attached for detailed information.

PROJECT TASKS & MILESTONES (See also Exhibit 1 overpage "Project Design & Construction Schedule"):

1. Topographic Survey = 6 weeks/ 1.5 months
2. Boundary Survey and Easements = 9 weeks/ 2.25 months
3. Engineering Design = 6 weeks/ 1.5 months (excludes City and ARDOT reviews)
4. Project Management = Duration of entire contract
5. Public Involvement = 2 * 2 days
6. Utility Coordination = Duration of entire contract
7. Advertising and Bidding Services = 8 weeks
8. Construction Admin & SDC = 10 weeks/2.5 months (Materials, Project Mgm't & Construction Obs)
9. Utility Relocations = Estimate 12 weeks/ 3.0 months (Timing TBA)
10. ROW/Easement Acquisitions = Estimate 3.5 months (Process start upon approval of 60% Submittal)
11. Total Estimated Design Duration = 16 weeks/4 months (excludes City and ARDOT reviews)
12. Total Estimated Construction Duration = 18 weeks/4.5 months (Bidding to Final Completion)

EXHIBIT 1

PROJECT DESIGN & CONSTRUCTION SCHEDULE

SW D St. Lateral Drainage — MCE — CITY OF BENTONVILLE — OTHERS

McCLELLAND CONSULTING ENGINEERS, INC.

PROPOSED PROJECT SCHEDULE - SE D LATERAL

TASK #	PROJECT TASK	WEEKS
		1 2 3 4 5 6 7 8 9 10 11 12 13 14 15 16 17 18 19 20 21 22 23 24 25 26 27 28 29 30 31 32 33 34 35 36 37 38 39 40 41 42 43 44 45 46 47 48 49 50 51 52
1	**Topographic Survey**	
	Field Survey	5 6 7 8
	Drafting and Review by PLS	9 10
2	**Boundary Survey and Easements**	
	Boundary Survey and Property Ownership Determination	9 10 11 12
	Preparation of Easements and Rights of Way	18 19 20 21 22
	Easements and Rights of Way Acquisition	20 21 22 23 24 25 26 27 28 29 30 31 32 33
3	**Design Drawings**	
	30% Design Submittal	11 12
	30% Design Review	13 14
	60% Design Submittal	15 16 17
	60% Design Review	18 19
	100% Design Submittal	20
	100% Design Review	21 22
4	**Project Management**	
	Weekly Reports, Internal Reviews and Closeout	
5	**Public Involvement Meeting**	
	Scheduling/Coordination	15 23
	PI Meeting	16 24
6	**Utility Coordination**	
	Utility Coordination Meeting and Coordination	16 26
	Relocations (By Others)	31 32 33 34 35 36 37 38 39 40 41 42
7	**Advertising and Bidding Services**	
	Advertisement Period	27 28 29 30
	Award and Preconstruction Meeting	33 34 35 36
8	**Services During Construction**	
	Construction Administration	42 43 44 45 46 47 48 49 50
	Project Closeout	50 51

APPENDIX D

ENGINEER'S SUPPLEMENTAL INFORMATION

ENGINEER'S ASSUMPTIONS & UNDERSTANDING OF PROJECT:

1. Water, Sanitary Sewer and Stormwater utility information is as presented on the City of Bentonville GIS website per the Master Public Map. It is anticipated that there will changes to this information, including alignments and sizes, once field locates have been completed and that these will be minor in nature.
2. Street improvements, other than drainage shall be in accordance with the local street designation as identified in the current version of the Master Street Plan, as approved on 01.21.2021, namely a local street with 4' greenspace and 5' sidewalks on both sides of street for SE 4th St. and SE. D St.
3. Bike/ Pedestrian accommodations shall be in accordance with the Draft Bentonville Bike & Pedestrian Master Plan "Connecting Bentonville" dated January 2021.
4. Two public engagement meetings are included, along with preparation of color exhibits of project concept/ design OR a recorded engineering presentation to be posted on City website with feedback provided to them via mechanism/forum set up and managed by City.
5. Basis of ENGINEER's fee for Services During Construction (SDC) assumes a maximum of 50% site attendance for the duration of the construction phase. Actual hours worked on a daily basis will vary depending on the needs of the construction activities at that time.
6. ENGINEER shall invoice monthly for work completed using hourly rates in effect at time of execution of work. See attached hourly rate schedule as Exhibit #2.
7. Reimbursable expenses shall include actual expenses incurred directly or indirectly in connection with the project and shall include, but not be limited to: ARKUPS, Deed Searches, Permits, mileage etc.
8. ENGINEER shall make best efforts to ensure timely relocations of utilities by way of advance project meetings and written communications. ENGINEER shall not be responsible for delays associated with utility relocations and associated impact on project schedule when utilities are non-responsive.
9. All project correspondence and documentation including submittals shall be made electronically, unless otherwise requested.
10. Project services in addition to that stated above under heading "Services by The Engineer" shall also include:
    a) Survey Related (see details below)
    b) Construction Materials Testing & Special Inspection Services (see details below)

SURVEY RELATED:

i. **Boundary Resolution:** ENGINEER will complete records research, field research and boundary resolution of up to eight (8) parcels along the specified route. The property lines of the parcel will be located and shown only on the topographic survey and exhibit maps. This scope does not include a separate boundary survey of each property. Total estimated cost $5,160.00.

ii. **Exhibit Maps & Descriptions:** ENGINEER will complete exhibit maps and descriptions for up to eight (8) properties affected by the route of the proposed project. The exhibit maps will show any Rights-of-Way, easements, or temporary construction easements needed for each property, and will be accompanied by separate descriptions for each area.

- Payment for the exhibit maps and descriptions shall be on a lump sum basis per completed maps in the amount of $750/map, up to eight (8) maps, for a total estimated cost of $6,000.00.

iii. **ROW/Easement Acquisition:** As part of ROW &/or easement acquisition process ENGINEER shall contract with and coordinate with licensed Real Estate Appraisal &/or Broker regards obtaining property appraisals to determine FMV of affected land as well as meeting with property owners to outline details of project and obtain signed legal agreement regards acquisition. ENGINEER shall coordinate with City regards agreement as to conditions and compensation being sought by individual property owners. The cost of this ROW/ Easement acquisition work shall be paid separately by the City removed from the scope of this agreement. ENGINEER shall obtain prior approval from City prior to entering into separate contract agreement with entity/entities responsible for this work. City shall undertake all legal actions necessary and be responsible for all costs associated with condemnation of property should the need arise.

iv. **Right-of-Way & Easement Stakeout:** ENGINEER will provide field stakeout of proposed right-of-way and easement lines as requested to assist with property acquisition for the project.

- Stakeout items include:
  - Proposed right-of-way and easement lines as shown on the Exhibit Maps that will be produced under the scope outlined in "Exhibit Maps & Descriptions" task above.
  - This proposal does not cover staking of any designed structures, changes, features, or centerline of route.
  - Staking services will be provided only as requested, on a per-parcel basis, to facilitate acquisition negotiations with affected landowners.
  - This proposal is only valid for the items specified herein and does not include the re-staking of any previously staked items.
  - Staking of any additional items not specified herein, or re-staking of any previously staked items will be considered additional work outside the scope of this proposal and will be billed at ENGINEER'S hourly rates. Hourly rates shall be in accordance with the most current hourly rate schedule for Survey Field Crew, Survey Technician and Professional Land Surveyor.
  - Estimated cost $2,640.00.

CONSTRUCTION MATERIALS TESTING & SPECIAL INSPECTION SERVICES:

It is anticipated that services for construction-materials testing and special inspections for the project will include proof roll observations/subgrade recommendations, soil and coarse aggregate base density testing, reinforcing bar observations, cast-in-place concrete testing, and asphalt testing. MCE would be happy to provide additional services relevant to the project that are not currently anticipated by this proposal, at the request of the Client at an agreed-upon unit price.

The fees for each service include travel time, mileage, reporting fees, and assume the following factors:

i. A Geotechnical Engineer/engineering technician spending one (1) hour onsite for proof-roll observation and/or subgrade recommendations regarding the building pad and pavement areas.

- Travel time, mileage, and report writing is factored into the unit trip price
- $275.00 per trip

ii. A certified technician spending 30 minutes onsite for each soil/base density testing trip

- Three (3) density tests being conducted per trip
- $215.00 per trip

iii. A Geotechnical Engineer or Engineering Technician spending one (1) hour onsite for the observation of reinforcing elements.

- $275.00 per trip

iv. A certified technician spending one (1) hour onsite for each cast-in-place concrete testing trip.

- MCE assumes that one (1) set of five (5) lab-cured 4" x 8" cylinders being sampled for every 50 cubic yards of concrete will satisfy testing frequency for the project based on project specifications.
- $305.00 per trip

v. A charge for concrete cylinder pick-up will only be applied in the event that it is the sole reason for the site visit on days where no other testing is scheduled. We have assumed that this will be required for approximately one-half (0.5) of the anticipated number of testing trips.

- $105.00 per trip

vi. A certified technician spending one (1) hour on-site to assist with establishing a rolling pattern during the placement of asphalt in pavement improvement areas.

- $215.00 per trip

vii. A certified technician spending two (2) hours on-site coring asphalt samples for laboratory testing. A minimum of two (2) cores will be required for bulk-specific gravity and thickness verification.

- $555.00 per trip

Based on provided project information, we expect that the project duration will be approximately six (6) months. From the assumptions and project details referenced above, we can provide construction materials testing and special inspections on this project for a Not-To-Exceed Without Approval amount as detailed below:

- Proof Roll Observations/Subgrade Recommendations $275.00
- Soil and Base Density Testing $1,290.00
- Reinforcing Observations $275.00

- Cast-in-Place Concrete Testing $610.00
- Concrete Cylinder Pick-Up $105.00
- Asphalt Rolling Pattern $215.00
- Asphalt Coring and Testing $555.00

Total Not-To-Exceed Without Approval Fee: $3,325.00

EXHIBIT 2

McCLELLAND CONSULTING ENGINEERS, INC.
DESIGNED TO SERVE

2021
McCLELLAND CONSULTING ENGINEERS, INC.
***STANDARD HOURLY RATES**

Chief Draftsman	$95 - $110
Clerical	$45 - $75
Construction Observer	$70 - $140
Draftsman	$65 - $95
Environmental Scientist/Designer	$105 - $120
Geotech Engineer	$85 - $170
HR/Payroll Admin	$75-$100
Landscape Architect	$90 - $140
Media Specialist	$80 - $100
Principal	$160 - $230
Project Accountant	$70 - $155
Project Designer	$80 - $140
Project Engineer	$120 - $175
Project Manager	$120 - $200
Registered Land Surveyor	$95 - $140
Soils Lab Technician	$50 - $135
Specification Writer	$50 - $90
Sr. Project Manager	$140 - $230
Survey (2 man or Robotic) Crew	$115 - $160
Survey (3 man) Crew	$135 - $195
Survey Field (1 Man or Rodman)	$45 - $105
Survey GPS	$75 - $130
Survey Technician	$65 - $95
Water Lab Supervisor	$70 - $120
Water Lab Tech	$50 - $95
Expenses	@ Cost
Mileage	.560/mi

** Standard Hourly Rates may be adjusted annually in accordance with the normal salary review practices of McClelland Consulting Engineers.*

RESOLUTION NO. _____

A RESOLUTION AUTHORIZING THE MAYOR TO ENTER INTO AN AGREEMENT WITH MCCLELLAND CONSULTING ENGINEERS, INC., FOR ENGINEERING AND PROJECT SERVICES FOR SE D LATERAL.

NOW, THEREFORE, BE IT RESOLVED BY THE CITY COUNCIL FOR THE CITY OF BENTONVILLE, ARKANSAS.

Section 1: That the Mayor be and is hereby authorized to enter into an agreement with McClelland Consulting Engineers, Inc. for engineering and project services for SE D Lateral Drainage in an amount of $74,475 as set forth in the Professional Services Agreement attached hereto as Exhibit "A".

Section 2: This resolution shall be in full force and effect from and after the date of its passage.

PASSED and APPROVED this _____ day of _____, 2021.

APPROVED:

_____
MAYOR

ATTEST:

_____
CITY CLERK

Agenda Item Form

Date of City Council Meeting	**6/22/2021**
Department	**Engineering**
Submitted by	**Dan Weese**
Phone	**(479) 254-2024**

Item Type: (*Check Applicable Item Type*)					
☐ Budget Adjustment	☐ Change Order	☐ Informational	☐ Ordinance	☑ Resolution	☐ Bid Award

Recommendation/Suggested Action *(Enter recommendation in space below):*

Resolution allowing the Mayor to enter into a professional services agreement with McClelland Consulting Engineers, Inc. for engineering and project services for Water Tower Road, SE 6th to E Battlefield Blvd (Phase 3). The cost of this contract will be $518,477.00. This Firm was selected following the City's standard RFQ solicitation and selection process for the procurement of professional services in accordance with state law.

Estimated Cost	**$518,477**
Is this Item Budgeted?	☐ Yes ☑ No

If no, please explain how item will be funded *(briefly explain in space below)* **:**

This project is part of the Bond program.

Memorandum

To: Mayor and City Council

From: Dan Weese, City Engineer

Date: Tuesday, June 8, 2021

Re: PSA for Water Tower Road PH3

Project Description: Road Improvements to Water Tower Road PH3.

McClelland Consulting Engineers, Inc. has been selected to perform all related engineering services needed for this project. This Professional Services Agreement (PSA) amount for this project is $518,477.00.

Staff requests approval of a resolution allowing the Mayor to enter into a PSA with McClelland Consulting Engineers, Inc. for this project.

Please contact me with any questions or concerns regarding this PSA or the project as a whole. My telephone number is (479) 254-2024 or I can be reached via email at dweese@bentonvillear.com.

PROFESSIONAL SERVICES AGREEMENT

PROJECT NAME: WATER TOWER ROAD PHASE III (8TH ST. TO E. BATTLEFIELD BLVD) ("PROJECT")

Munis # 21ST0018

THIS AGREEMENT ("AGREEMENT") is made in Benton County, Arkansas, by and between the City of Bentonville, Arkansas, hereinafter referred to as "CITY", and MCCLELLAND CONSULTING ENGINEERS, INC., hereinafter referred to as "ENGINEER" (collectively, the "PARTIES").

The PARTIES have caused this AGREEMENT to be effective this ____day of _____, 2021 ("EFFECTIVE DATE").

RECITALS:

A. WHEREAS, the CITY has a need to perform capital improvement projects for the City of Bentonville, Arkansas; and

B. WHEREAS, The CITY has selected the ENGINEER and negotiated this AGREEMENT using the procedures as set forth in Ark. Code Ann. § 19-11-800; and

C. WHEREAS, the CITY wishes to contract for Professional Services; and

D. WHEREAS, The ENGINEER has the skill, experience, ability, background, certifications and knowledge to provide these services; and

E. WHEREAS, The ENGINEER wishes to perform such professional services under this AGREEMENT with the CITY.

NOW, THEREFORE, in consideration of the terms in this AGREEMENT, the CITY and ENGINEER agree to the following:

ARTICLE I - PROJECT DESCRIPTION

The PROJECT shall be as described in APPENDIX A. "Project Description", attached hereto and incorporated herein by reference.

ARTICLE II - SCOPE OF SERVICE

Upon issuance of a written Notice to Proceed by the CITY, ENGINEER agrees to provide the CITY the necessary professional services related to the PROJECT, as set forth in APPENDIX B, "Scope of Services" ("SCOPE"), attached hereto and incorporated herein by reference.

ARTICLE III - STANDARD OF CARE

ENGINEER shall at all times material hereto adhere to the generally accepted standard of care typically exhibited by similarly situated professionals performing similar scope(s) of service on projects of like size, scope, nature, cost, schedule, and complexity, at the same time and in the same general regional locale ("Standard of Care").

ARTICLE IV - ADDITIONAL SERVICES

A. Any service outside of the work described herein or included by reference hereto must be pre-approved by the CITY and executed as an AMENDMENT to this AGREEMENT by the Parties prior to any such work being completed; any such AMENDMENT shall be in accordance with the CITY'S purchasing laws and guidelines and may require approval from the Bentonville City Council.

B. ENGINEER shall make no claims for additional services or changes in the services until an AMENDMENT has been fully executed by the Parties.

ARTICLE V - SCHEDULE OF FEES, SERVICES AND PAYMENT

A. The term of this AGREEMENT shall commence on the EFFECTIVE DATE and shall proceed in accordance with APPENDIX C, "Schedule of Fees and Services, Key Milestones, and Durations for Major Tasks", attached hereto and incorporated herein by reference.

B. The cost of this AGREEMENT shall be in accordance with APPENDIX C.

C. CITY agrees to pay ENGINEER for all services authorized by inclusion in this AGREEMENT which have been properly performed by ENGINEER in accordance with this AGREEMENT.

D. All fees paid to ENGINEER shall be based on invoices submitted by ENGINEER for work performed under this AGREEMENT, less any previous payments. ENGINEER shall submit invoices for services related to this AGREEMENT on a monthly basis.

E. CITY reserves the right to delay, without penalty, any partial payment when, in the opinion of the CITY, ENGINEER has not made satisfactory progress on the Project based on the SCOPE. If CITY objects to any portion of an invoice, the CITY shall notify ENGINEER and shall pay all other portions of the invoice which are not in dispute. In the event of dispute, CITY and ENGINEER shall immediately make every effort to settle the disputed portion of the invoice.

F. In the event that the CITY becomes credibly informed that any representations of ENGINEER provided in its invoicing are wholly or partially inaccurate, CITY may withhold payment of sums then, or in the future, otherwise due to ENGINEER until the inaccuracy and the cause thereof is corrected to the CITY's reasonable satisfaction.

G. If the CITY fails to make any payment, not in dispute, due to ENGINEER within thirty (30) days after receipt of an invoice, then the amount due to the ENGINEER will increase at the lesser of one percent (1 %) per month or the maximum amount allowed by law after the 30th day. In addition, ENGINEER may, after giving seven (7) days' written notice to CITY, suspend its services and any deliverables until ENGINEER has been paid in full for all amounts outstanding more than thirty (30) days.

ARTICLE VI - INSURANCE

A. ENGINEER shall during the term hereof maintain in full force and effect the following insurance:

1. A comprehensive general liability policy of insurance for bodily injury, death and property damage insuring against all claims, demands or actions relating to the ENGINEER's performance of services pursuant to this AGREEMENT with a combined single limit of not less than $1,000,000.00 per occurrence and $2,000,000 in the aggregate for injury to persons (including death), and for property damage;
2. A policy of automobile liability insurance covering any vehicles owned and/or operated by ENGINEER, its officers, agents, and employees, and used in the performance of this AGREEMENT with policy limits of not less than $1,000,000.00 combined single limit and aggregate for bodily injury and property damage;
3. Statutory Worker's Compensation Insurance at the statutory limits and Employers Liability covering all of ENGINEER's employees involved in the provision of services under this AGREEMENT with policy limit of not less than $1,000,000.00; and
4. Professional Liability/Errors and Omissions coverage covering negligent acts, errors and omissions in the performance of professional services with policy limit of not less than $1,000,000.00.

B. All insurance and certificate(s) of insurance shall contain the following provisions:

1. Include CITY as additional insured as to all applicable coverage with the exception of Workers Compensation Insurance and Professional Liability/Errors and Omissions coverage; and
2. provide for at least thirty (30) days prior written notice to CITY for cancellation or non-renewal of the insurance;
3. provide for a waiver of subrogation against CITY for injuries, including death, property damage, or any other loss to the extent the same is covered by the proceeds of insurance, except for Professional Liability/Errors and Omissions coverage.

C. ENGINEER shall provide 30 day written notice to CITY of any material change of or to the insurance required herein.

D. All insurance companies providing the required insurance shall be authorized to transact business in Arkansas and rated at least "A" by AM Best or other equivalent rating service. A certificate of insurance evidencing the required insurance and all endorsements required by this Agreement shall be submitted prior to commencement of services.

E. In the event that additional or greater insurance requirements are warranted, these requirements shall be included as an Appendix, which will be attached hereto and incorporated by reference.

ARTICLE VII - RIGHT OF ACCESS

A. CITY will obtain and/or furnish right-of-access for ENGINEER to perform any required studies, surveys, tests or other necessary investigations in relation to the PROJECT.

B. ENGINEER will take reasonable precautions to minimize damage to the personal or real property in the performance of such surveys, tests, studies and investigations.

C. CITY recognizes that ENGINEER's operations and use of equipment may unavoidably alter existing conditions or affect the environment at the PROJECT site. The cost of repairing such damage shall be the responsibility of ENGINEER, at no additional cost to the CITY. In the event that ENGINEER fails to correct such damages, CITY is entitled to utilize CITY forces or other labor to repair the damage; any costs incurred by CITY for such work shall be deducted from the monies due to ENGINEER.

ARTICLE VIII - RECORDS AND RETENTION

A. All surveys, studies, proposals, applications, drawings, plans, specifications and other documents, including those in electronic form, prepared by ENGINEER and its ENGINEERs, subcontractors, agents, representatives, and/or employees in connection with this AGREEMENT ("PROJECT DOCUMENTS") are intended for the use and benefit of CITY. ENGINEER and its ENGINEERs, subcontractors, agents, representatives, and/or employees shall be deemed the authors of their respective part of the PROJECT DOCUMENTS. Notwithstanding anything to the contrary, CITY shall own, have, and retain all rights, title and interest in and to all PROJECT DOCUMENTS, whether in draft form or final form, which are produced at CITY's request or otherwise produced from ENGINEER's performance of the work described herein for CITY. The CITY's ownership of PROJECT DOCUMENTS shall not apply to ENGINEER's proprietary standard details that were developed by the ENGINEER prior to the commencement of this PROJECT.

B. CITY shall have full authority to reuse, reproduce, publish, disclose and distribute PROJECT DOCUMENTS, as needed, according to Arkansas State Law.

C. ENGINEER shall, upon completion of the services and full payment for the ENGINEER'S services by the CITY, or earlier termination and appropriate compensation as provided by this AGREEMENT, provide the CITY with all PROJECT DOCUMENTS prepared by ENGINEER pursuant to this AGREEMENT in formats requested by the CITY.

D. All instruments of service (including plans, specifications, drawings, reports, designs, computations, computer programs, estimates, surveys, other data or work items, etc.) prepared under this AGREEMENT shall be submitted for approval to the CITY. All instruments of service shall be professionally sealed in accordance to applicable laws or at CITY's request.

E. Acceptance and approval of the PROJECT DOCUMENTS by the CITY shall not constitute nor be deemed a release of the responsibility and liability of ENGINEER, its employees, associates, agents and ENGINEERs for the accuracy or competency of their designs, working drawings and specifications, or other documents and work; nor shall such approval be deemed to be an assumption of such responsibility by the CITY for any defect in the designs, working drawings and specifications, or other documents prepared by ENGINEER, its employees, contractor, agents and ENGINEERs.

F. ENGINEER will retain the PROJECT DOCUMENTS for a period of three years following project completion. During this three-year period, any requests for document recovery and reproduction will be assessed a fee in accordance with ENGINEER's FEES.

ARTICLE IX - SAFETY

A. CITY agrees to inform ENGINEER of any applicable site safety procedures and regulations known to CITY as well as any special safety concerns or dangerous conditions at the site of which the CITY is aware, which ENGINEER shall communicate to its employees. ENGINEER and its employees shall adhere to such procedures and regulations once notice has been given by the CITY.

B. Unless specifically provided in the SCOPE, ENGINEER shall not have any responsibility for overall job safety at the site. If in the ENGINEER's opinion, its field personnel are unable to access required locations or perform required services in conformance with applicable safety standards, ENGINEER may immediately suspend performance until such safety standards can be attained.

C. ENGINEER agrees to indemnify and hold harmless the CITY for any safety conditions that may arise out of ENGINEER's performance of this AGREEMENT.

ARTICLE X - TERMINATION

A. CITY may suspend or terminate this AGREEMENT for cause or without cause at any time by giving written notice to ENGINEER. In the event suspension or termination is without cause, payment to ENGINEER, in accordance with the terms of this AGREEEMENT, will be made on the basis of services reasonably determined by the CITY to be satisfactorily performed to the date of suspension or termination. Such payment will be due upon delivery of all instruments of service to CITY.

B. Should the CITY require a modification of this AGREEMENT with the ENGINEER, and in the event the CITY and ENGINEER fail to agree upon a modification to this AGREEMENT, the CITY shall have the option of terminating this AGREEMENT and the ENGINEER's services hereunder at no additional cost other than the payment to ENGINEER, in accordance with the terms of this AAGREEMENT, for the services reasonably determined by the CITY to be properly performed by ENGINEER prior to such termination date.

C. If, for whatever adequate funding is not made available by CITY to support or justify continuation of the level of services to be provided by ENGINEER under this AGREEMENT, CITY may terminate or reduce the amount of services to be provided by ENGINEER under this AGREEMENT. In such event, CITY will notify ENGINEER in writing at least thirty (30) days in advance of such termination or reduction of services for lack of funds.

D. In no event shall the CITY pay to ENGINEER fees for termination outside of payment for services reasonably determined by the City to be properly performed prior to termination.

ARTICLE XI - INDEMNIFICATION

A. For purposes of this AGREEMENT, ENGINEER agrees to indemnify, hold harmless the CITY, its officers and employees from any loss, damage, liability or expense, of any nature whatsoever to the extent caused by the negligence, willful misconduct, or other actionable fault of ENGINEER, its affiliates, subsidiaries, employees, agents, assignees, and subcontractors and their respective employees and agents. ENGINEER is not required hereunder to defend the CITY, its officers, appointees, employees, or agents from assertions that they were negligent, nor to indemnify and hold them harmless from liability based on the CITY's negligence

B. Nothing contained herein shall waive any governmental immunity CITY may be entitled to by law.

C. This provision shall survive the termination of this AGREEMENT.

ARTICLE XII - CONTINGENCY CLAUSE

A. The CITY may add a contingency amount to the contract to cover additional services as described in APPENDIX B. Any use of such contingency funds for additional services shall be executed as an AMENDMENT to this AGREEMENT.

B. The Contingency shall in no manner substitute for an official AMENDMENT.

ARTICLE XIII - RELATIONSHIP OF THE PARTIES

It is understood and agreed by and between the parties that the ENGINEER, in satisfying the conditions of this AGREEMENT, is acting independently, and that the CITY assumes no responsibility or liabilities to any third party in connection with ENGINEER's actions. All services to be performed by the ENGINEER pursuant to this AGREEMENT shall be in the capacity of an Independent Contractor, and not as an agent or employee of CITY. The ENGINEER shall supervise the performance of its services and shall be entitled to control the manner and means by which its services are to be performed, subject to the terms of this AGREEMENT. There is no intended third party beneficiary to the AGREEMENT and nothing contained herein shall create a contractual relationship with, or any rights in favor of, any third party.

ARTICLE XIV - DISPUTE RESOLUTION

A. CITY and ENGINEER agree that disputes relative to the services will first be addressed by negotiations between the Parties. If direct negotiations fail to resolve the dispute, the Party initiating the claim that is the basis for dispute may take such steps as it deems necessary to protect its interests; provided, however, that notwithstanding any such dispute, ENGINEER will proceed with the services as per this AGREEMENT as if no dispute existed, and CITY will continue to make payment for ENGINEER's completed services; and provided further that no dispute will be submitted to arbitration without both Parties' express written consent.

ARTICLE XV - OPINIONS OF PROBABLE COST

A. Since the ENGINEER has no control over the cost of labor, materials, equipment or services furnished by others, or over methods of determining prices, or over competitive bidding or market conditions, the ENGINEER's estimates of PROJECT costs and construction costs provided for herein are to be made on the basis of the ENGINEER's experience and qualifications and represent the ENGINEER's judgement in accordance with the "Standard of Care". The ENGINEER cannot and does not guarantee that proposals, bids or actual PROJECT or construction costs will not vary from estimates prepared by the ENGINEER.

B. The CITY understands that the construction cost estimates developed by the ENGINEER do not establish a limit for construction contract amount. If the actual amount of the low construction bid exceeds the construction budget established by the CITY, the ENGINEER will not be required to re-design the PROJECT or any part thereof without additional compensation.

ARTICLE XVI - APPLICABLE LAWS

ENGINEER shall comply with all Federal, State, Local laws, ordinances, resolutions, specifications, regulations and all other laws or regulations relating or applicable to service to be performed under this AGREEMENT. Interpretation of this AGREEMENT and disputes arising out of or related to this AGREEMENT will be subject to and governed by the laws of the State of Arkansas. Jurisdiction and venue for any suit arising out of or related to this AGREEMENT will be in the District Court of Benton County, Arkansas,

ARTICLE XVII - PRECEDENCE

This AGREEMENT shall take precedence over any inconsistent of contradictory provisions contained in any proposal, contract, purchase order, requisition, notice to proceed, or any other like document regarding the PROJECT or ENGINEER's services.

ARTICLE XVIII - SEVERABILITY

A. In the event that one or more provisions contained herein shall, for any reason, be deemed invalid, illegal, void or unenforceable, in whole or in part, the remaining provisions hereof shall remain in full force and effect.

B. In the event that any provision hereof is in conflict with any statutory provision of the State of Arkansas, said provision, which may be in conflict therewith, shall be deemed inoperative, null and void insofar as it may be in conflict therewith, and shall be deemed modified to conform to such statutory provisions; provided, however, that the remaining provisions of this AGREEMENT will be unaffected and will continue to be valid and enforceable.

ARTICLE XIX - SURVIVAL OF OBLIGATIONS

The obligations of the Parties contained in this AGREEMENT, which by their nature survive after the term of the AGREEMENT, shall survive the termination or expiration of this AGREEMENT and continue indefinitely or as otherwise provided by this AGREEMENT.

ARTICLE XX – ENTIRE AGREEMENT

This AGREEMENT, including all documents and Appendices included by reference herein, constitutes the entire agreement between the PARTIES and supersedes all prior agreements, whether oral or written, covering the same subject matter. This AGREEMENT may not be modified or amended except in writing, mutually agreed upon and accepted by both PARTIES to this AGREEMENT.

The cost of this AGREEMENT including all reimbursable expenses as described in the FEES AND SCHEDULE, **shall not exceed** Five Hundred Eighteen Thousand, Four Hundred Seventy-Seven Dollars ($518,477.00.), unless otherwise approved by the CITY through an official AMENDMENT agreed and executed by CITY and ENGINEER.

IN WITNESS THEREOF, the CITY and ENGINEER have executed this AGREEMENT, the EFFECTIVE DATE of which is indicated on page 1 of this AGREEMENT.

CITY OF BENTONVILLE	**MCCLELLAND CONSULTING ENGINEERS, INC.**
CITY	ENGINEER
	Kevin Beaumont
BY	BY
MAYOR	**VICE PRESIDENT**
TITLE	TITLE
	06.04.2021
DATE SIGNED	DATE SIGNED

Kevin Beaumont Date: 2021.06.04 16:57:30-05'00'

APPENDIX A

PROJECT DESCRIPTION

BASIC PROJECT INFORMATION:

CONSTRUCT IMPROVEMENTS TO WATER TOWER ROAD FOR APPROXIMATELY 0.51 MILES BETWEEN SE 6TH STREET AND BATTLEFIELD BOULEVARD. THE ROADWAY WILL BE A FOUR-LANE ROAD WITH A RAISED CENTER MEDIAN AND A ROUNDABOUT AT THE INTERSECTION OF WATER TOWER ROAD AND BATTLEFIELD BOULEVARD. THE PROJECT WILL INCLUDE PEDESTRIAN AND BICYCLE FACILITIES THAT ARE CONSISTENT WITH THE CITY OF BENTONVILLE'S BICYCLE AND PEDESTRIAN MASTER PLAN.

APPENDIX B

SCOPE OF SERVICES

SERVICES BY THE CITY

- Furnish required information and approvals and perform responsibilities and activities in a timely manner to facilitate orderly progress of the work.
- Provide criteria and information as to the requirements for the PROJECT, including design objectives and constraints, right-of-way, capacity and performance requirements, and any budgetary limitations.
- Furnish copies of design and construction standards that the CITY will require to be included in the drawings and specifications.
- Assist the ENGINEER by placing at their disposal all available information pertinent to the PROJECT, including previous reports and other data relative to design or construction of the PROJECT.
- Arrange for access to public and private property as required for the PROJECT.
- Obtain the necessary lands, easements and rights-of-way for the PROJECT.
- Reimburse all plan review, advertising costs, permits and approvals in connection with the PROJECT.
- Pay the ENGINEER is accordance with the terms of the AGREEMENT.

If the CITY observes or otherwise becomes aware of any fault or defect in the PROJECT, the CITY shall give prompt written notice thereof to the ENGINEER.

SERVICES BY THE ENGINEER

- Meet all requirements of the AGREEMENT including any AMENDMENTS.
- Produce all documents and services needed for the PROJECT, including but not limited to:

  Topographical Surveys, Right-of-Way Surveys, Utility Surveys and Coordination, Traffic Study, Geotechnical Investigations, Environmental Surveys, Permitting, Major Drainage Study, Conceptual Design Phase (30%), Preliminary Design Phase (60%), Final Design Phase (90%), Public Meetings, Bidding Services, Construction Support Services, Project Management Services, Project Closeout.
- Project Management services for the entire life of the project that align with the Project Management Institute Project Management Book of Knowledge Latest Edition.
- All Design and Construction shall conform to Federal, State and Local regulations.
- Coordinate PROJECT with Franchise Utility Companies to assure adequate space for all facilities and timely relocations.
- Coordinate and Furnish approvals and permits from all Regulatory Agencies having jurisdiction over the PROJECT.
- Provide all services relevant to City of Bentonville Plan Review procedures.
- Create and provide all documents for property acquisitions and assist with any layout or staking required.
- Coordinate and facilitate meetings with CITY and Agencies for plan review, project coordination and right-of-way.
- Subcontracting of services by the ENGINEER shall have prior approval of the CITY.
- Refer also to Appendix D attached for ENGINEER'S supplemental information.

APPENDIX C

SCHEDULE OF FEES AND SERVICES, KEY MILESTONES, AND DURATIONS FOR MAJOR TASKS

Task No.	Description	Estimated Fees
1	Topographic Survey	$ 8,500.00
2	Geotechnical Survey	$ 14,620.00
3	Boundary Survey, Easements & Exhibits	$ 12,250.00
4	Engineering Design	$ 245,430.00
5	Project Management	$ 75,250.00
6	Appraisals & Acquisitions (By Others)	$ TBA
7	Advertising and Bidding Services	$ 3,700.00
8	Construction Administration	$ 35,450.00
9	Services During Construction (SDC)	$ 107,250.00
10	Materials Testing	$ 8,777.00
11	Reimbursables	$ 7,250.00
TOTAL ESTIMATED ENGINEERING COSTS		**$ 518,477.00**

Note: Total Estimated Engineering Costs excludes that of Appraisals & Acquisitions to be performed by sub-consultant(s), fee subject to City approval. For Schedule of Fees see Exhibit 2 attached for detailed information.

PROJECT TASKS & MILESTONES (See also Exhibit 1 overpage "Project Design & Construction Schedule"):

1. Topographic Survey = 8 weeks/2 months
2. Geotechnical Investigation = 6 weeks/2.5 months
3. Boundary Survey and Easements = 16 weeks/4 months
4. Engineering Design = 46 weeks/10.5 months (excludes City and ARDOT reviews)
5. Project Management = Duration of entire design contract
6. Public Involvement = 2 * 2 days
7. Utility Coordination = Duration of entire contract
8. Advertising and Bidding Services = 10 weeks/2.5 months
9. Construction Admin & SDC = 56 weeks/13 months (Materials, Project Mgm't & Construction Obs)
10. Utility Relocations = Estimate 5 months (Timing TBA)
11. ROW/Easement Acquisitions = Estimate 4 months (Process start upon approval of 60% Submittal)
12. Total Estimated Design Duration = 54 weeks/12.5 months (excludes City and ARDOT reviews)
13. Total Estimated Construction Duration = 66 weeks/15.5 months (Bidding to Final Completion

PROJECT DESIGN & CONSTRUCTION SCHEDULE

EXHIBIT 1

Water Tower Road Phase 3 — MCE — CITY OF BENTONVILLE/ ARDOT — OTHERS

McCLELLAND CONSULTING ENGINEERS, INC.

PROPOSED PROJECT SCHEDULE - Water Tower Road Phase 3: 8th St to Battlefield Blvd

TASK #	PROJECT TASK	WEEKS
		1 2 3 4 5 6 7 8 9 10 11 12 13 14 15 16 17 18 19 20 21 22 23 24 25 26 27 28 29 30 31 32 33 34 35 36 37 38 39 40 41 42 43 44 45 46 47 48 49 50 51 52
1	**Topographic Survey**	
	Field Survey	5 6
	Drafting and Review by PLS	7 8
2	**Geotechnical Investigation**	
	Field Work	10 11
	Analysis & Report	14 15
2	**Boundary Survey and Easements**	
	Boundary Survey and Property Ownership Determination	1 2 3 4
	Preparation of Easements and Rights of Way	44 45 46 47 48 49 50 51 52
	Easements and Rights of Way Acquisition	52
3	**Design Drawings**	
	30% Design Submittal	16 17 18 19 20 21 22 23 24 25 26 27 28 29
	30% Design Review	30 31
	60% Design Submittal	32 33 34 35 36 37 38 39 40 41 42 43 44 45 46 47 48 49
	60% Design Review	50 51
	100% Design Submittal	52
	100% Design Review	
4	**Project Management**	
	Weekly Reports, Internal Reviews and Closeout	
5	**Public Involvement Meeting**	
	Scheduling/Coordination	33
	PI Meeting	34
6	**Utility Coordination**	
	Utility Coordination Meeting and Coordination	33 34 35 36
	Relocations (By Others)	

TASK #	PROJECT TASK	WEEKS
		53 54 55 56 57 58 59 60 61 62 63 64 65 66 67 68 69 70 71 72 73 74 75 76 77 78 79 80 82 84 86 88 90 92 94 96 98 100 105 110 115 120 125 130 132 134 136 138 140 142 144 146
2	**Boundary Survey and Easements**	
	Boundary Survey and Property Ownership Determination	
	Preparation of Easements and Rights of Way	53 54 55
	Easements and Rights of Way Acquisition	53 54 55 56 57 58 59 60 61 62 63 64 65 66 67 68 69 70 71
3	**Design Drawings**	
	30% Design Submittal	
	30% Design Review	
	60% Design Submittal	
	60% Design Review	
	100% Design Submittal	53 54 55 56 57 58 59 60 61 62 63 64 65
	100% Design Review	66 67 68 69
4	**Project Management**	
	Weekly Reports, Internal Reviews and Closeout	
5	**Public Involvement Meeting**	
	Scheduling/Coordination	70
	PI Meeting	71
6	**Utility Coordination**	
	Utility Coordination Meeting and Coordination	53 54 55 56 57 58 59 60 61 62 63 64 65 66 67 68 69 70 71 72 73 74 75 76 77 78 79 80 82 84 86 88 90 92 94 96
	Relocations (By Others)	72 73 74 75 76 77 78 79 80 82 84 86 88 90 92 94 96
7	**Advertising and Bidding Services**	
	Advertisement Period	72 73 74 75
	Award and Preconstruction Meeting	76 77 78 79
8	**Services During Construction**	
	Construction Administration	84 86 88 90 92 94 96 98 100 105 110 115 120 125 130 132 134 136
	Project Closeout	138 140

APPENDIX D

ENGINEER'S SUPPLEMENTAL INFORMATION

ENGINEER'S ASSUMPTIONS & UNDERSTANDING OF PROJECT:

1. Water, Sanitary Sewer and Stormwater utility information is as presented on the City of Bentonville GIS website per the Master Public Map. It is anticipated that there will changes to this information, including alignments and sizes, once field locates have been completed and that these will be minor in nature.
2. The typical street section shall be in accordance with the arterial street designation as identified in the current version of the Master Street Plan, as approved on 01.21.2021, namely a divided four-lane with central median, See also #5 below.
3. Bike/ Pedestrian accommodations shall be in accordance with the Draft Bentonville Bike & Pedestrian Master Plan "Connecting Bentonville" dated January 2021.
4. Two public engagement meetings are included, along with preparation of color exhibits of project concept/ design OR a recorded engineering presentation to be posted on City website with feedback provided to them via mechanism/forum set up and managed by City.
5. The Phase I roundabout will be constructed as designed. Modifications shall be made to the northern leg to transition to the typical street section for a divided arterial, and shall include a SBRT bypass lane connecting to 8th St west of the roundabout. The NB Lane from the roundabout shall remain a single lane until the point that it connects with SE 6th St. at which point it will transition into two lanes.
6. The centerline radius of the northern leg from the roundabout shall be modified to ensure that the divided four-lane arterial with sidewalk and greenspace does not conflict with the existing Maxwell/Mt. Eden cemetery.
7. Basis of ENGINEER's fee for Services During Construction (SDC) assumes a maximum of 50% site attendance for the duration of the construction phase. Actual hours worked on a daily basis will vary depending on the needs of the construction activities at that time.
8. ENGINEER shall invoice monthly for work completed using hourly rates in effect at time of execution of work. See attached hourly rate schedule.
9. Reimbursable expenses shall include actual expenses incurred directly or indirectly in connection with the project and shall include, but not be limited to: ARKUPS, Deed Searches, Permits, mileage etc.
10. ENGINEER shall make best efforts to ensure timely relocations of utilities by way of advance project meetings and written communications. ENGINEER shall not be responsible for delays associated with utility relocations and associated impact on project schedule when utilities are non-responsive.
11. All project correspondence and documentation including submittals shall be made electronically, unless otherwise requested.
12. Project services in addition to that stated above under heading "Services By The Engineer" shall also include:
    a) Survey Related (see details below)
    b) Geotechnical Investigation (see detail below)
    c) Construction Materials Testing & Special Inspection Services (see details below)

SURVEY RELATED:

i. **Boundary Resolution:** ENGINEER will complete records research, field research and boundary resolution of up to five parcels along the specified route. The property lines of the parcel will be located and shown only on the topographic survey and exhibit maps. This scope does not include a separate boundary survey of the property.

ii. **Exhibit Maps & Descriptions:** ENGINEER will complete exhibit maps and descriptions for up to five (5) properties affected by the route of the proposed project. The exhibit maps will show any Rights-of-Way, easements, or temporary construction easements needed for each property, and will be accompanied by separate descriptions for each area.

- Payment for the exhibit maps and descriptions shall be on a lump sum basis per completed maps in the amount of $675/map, up to five (5) maps, for a total estimated cost of $3,375.

iii. **ROW/Easement Acquisition:** As part of ROW &/or easement acquisition process ENGINEER shall contract with and coordinate with licensed Real Estate Appraisal &/or Broker regards obtaining property appraisals to determine FMV of affected land as well as meeting with property owners to outline details of project and obtain signed legal agreement regards acquisition. ENGINEER shall coordinate with City regards agreement as to conditions and compensation being sought by individual property owners. The cost of this ROW/ Easement acquisition work shall be paid separately by the City removed from the scope of this agreement. ENGINEER shall obtain prior approval from City prior to entering into separate contract agreement with entity/entities responsible for this work. City shall undertake all legal actions necessary and be responsible for all costs associated with condemnation of property should the need arise.

iv. **Right-of-Way & Easement Stakeout:** ENGINEER will provide field stakeout of proposed right-of-way and easement lines as requested to assist with property acquisition for the project.

- Stakeout items include:
  - Proposed right-of-way and easement lines as shown on the Exhibit Maps that will be produced under the scope outlined in "Exhibit Maps & Descriptions" task above.
  - This proposal does not cover staking of any designed structures, changes, features, or centerline of route.
  - Staking services will be provided only as requested, on a per-parcel basis, to facilitate acquisition negotiations with affected landowners.
  - This proposal is only valid for the items specified herein and does not include the re-staking of any previously staked items.
  - Staking of any additional items not specified herein, or re-staking of any previously staked items will be considered additional work outside the scope of this proposal and will be billed at ENGINEER'S hourly rates. Hourly rates shall be in accordance with the most current hourly rate schedule for Survey Field Crew, Survey Technician and Professional Land Surveyor.

GEOTECHNICAL INVESTIGATION:

Scope shall be as follows:

i. **Field Work:** To conduct a geotechnical investigation consisting of five (5) project borings and approximately three (3) project test pits along the understood alignment. Note that excavation of test pits will be subcontracted out. The proposed project borings will be conducted to planned terminal depths ranging between 6.5 and 10.0 feet below the existing ground elevations; or until materials resulting in auger refusal are encountered. The project test pits will be conducted to terminal depths determined by the onsite MCE representative(s) to be suitable for the support of select fill material. Refer to exhibit below.

ii. **Evaluation:** Determine the engineering properties of the encountered site subgrade soils, perform engineering analyses of the sampled soil/rock strata based on laboratory data, and develop a written Geotechnical Report to include soil properties of the encountered subsurface material, initial site grading considerations, recommended subgrade improvements (if applicable), and recommended pavement section. Additional items may include wet weather construction considerations, excavation considerations, suitability of onsite material to be utilized as select fill on the project, and construction materials testing/special inspections recommendations.

iii. **Fee:** To conduct the geotechnical scope of work described herein for a lump sum amount of $8,777.00.

Water Tower Road - SE 6th St. to E. Battlefield Blvd.
MCE23-091 - Proposed Exploration Plan - Sheet 1
Legend
Proposed Test Pit Location
Proposed Boring Location (10')
Proposed Boring Location (6.5')
B-05
B-04
B-03
B-02
B-01
TP-03
TP-02
TP-01
E Battlefield Blvd
Water Tower Rd
SE 3rd St
SE Eaton St
SE 5th St
SE 6th St
Drake St
College Pl
Lyndal Ln
SE Cambridge Pl
Prairie Ln
Rebecca R
Heights Way
49
707
1000 ft
N
Google Earth
© 2021 Google

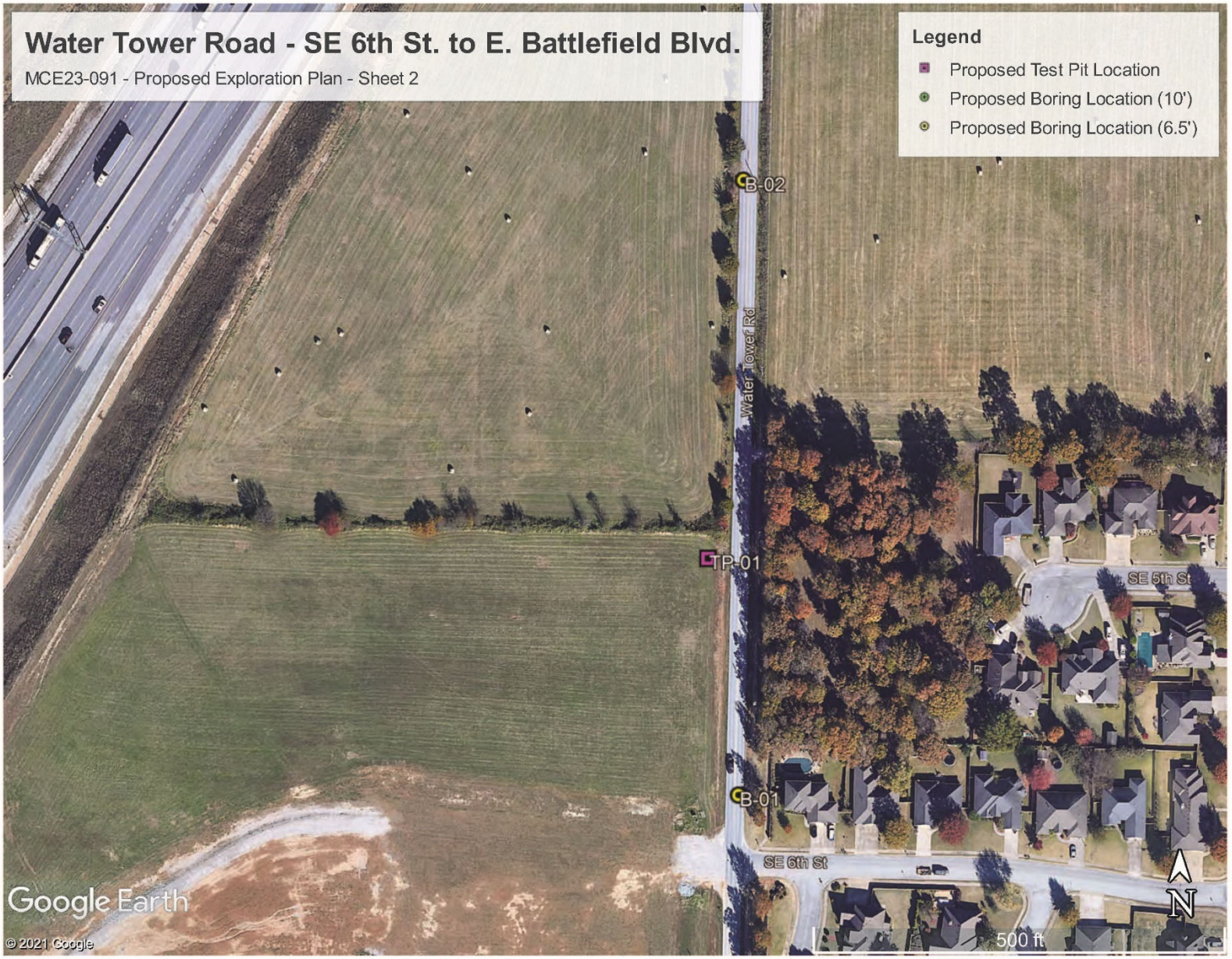
Water Tower Road - SE 6th St. to E. Battlefield Blvd.
MCE23-091 - Proposed Exploration Plan - Sheet 2
Legend
Proposed Test Pit Location
Proposed Boring Location (10')
Proposed Boring Location (6.5')
B-02
Water Tower Rd
TP-01
SE 5th St
B-01
SE 6th St
N
500 ft
Google Earth
© 2021 Google

CONSTRUCTION MATERIALS TESTING & SPECIAL INSPECTION SERVICES:

It is anticipated that services for construction-materials testing and special inspections for the project will include proof roll observations/subgrade recommendations, soil and coarse aggregate base density testing, reinforcing bar observations, cast-in-place concrete testing, and asphalt testing. MCE would be happy to provide additional services relevant to the project that are not currently anticipated by this proposal, at the request of the Client at an agreed-upon unit price.

The fees for each service include travel time, mileage, reporting fees, and assume the following factors:

i. A Geotechnical Engineer/engineering technician spending one (1) hour onsite for proof-roll observation and/or subgrade recommendations regarding the building pad and pavement areas.

- Travel time, mileage, and report writing is factored into the unit trip price
- $275.00 per trip

ii. A certified technician spending 30 minutes onsite for each soil/base density testing trip

- Three (3) density tests being conducted per trip
- $215.00 per trip

iii. A Geotechnical Engineer or Engineering Technician spending one (1) hour onsite for the observation of reinforcing elements.

- $275.00 per trip

iv. A certified technician spending one (1) hour onsite for each cast-in-place concrete testing trip.

- MCE assumes that one (1) set of five (5) lab-cured 4" x 8" cylinders being sampled for every 50 cubic yards of concrete will satisfy testing frequency for the project based on project specifications.
- $305.00 per trip

v. A charge for concrete cylinder pick-up will only be applied in the event that it is the sole reason for the site visit on days where no other testing is scheduled. We have assumed that this will be required for approximately one-half (0.5) of the anticipated number of testing trips.

- $105.00 per trip

vi. A certified technician spending one (1) hour on-site to assist with establishing a rolling pattern during the placement of asphalt in pavement improvement areas.

- $215.00 per trip

vii. A certified technician spending three (3) hours on-site coring asphalt samples for laboratory testing. A minimum of four (4) cores will be required for bulk-specific gravity and thickness verification.

- $685.00 per trip

Based on provided project information, we expect that the project duration will be approximately six (6) months. From the assumptions and project details referenced above, we can provide construction materials testing and special inspections on this project for a Not-To-Exceed Without Approval amount as detailed below:

- Proof Roll Observations/Subgrade Recommendations $2,750.00
- Soil and Base Density Testing $5,805.00
- Reinforcing Observations $1,100.00
- Cast-in-Place Concrete Testing $2,745.00
- Concrete Cylinder Pick-up $420.00
- Asphalt Rolling Pattern $430.00
- Asphalt Coring and Testing $1,370.00

Total Not-To-Exceed Without Approval Fee: $14,620.00

EXHIBIT 2

McCLELLAND CONSULTING ENGINEERS, INC.
DESIGNED TO SERVE

2021
McCLELLAND CONSULTING ENGINEERS, INC.
***STANDARD HOURLY RATES**

Chief Draftsman	$95 - $110
Clerical	$45 - $75
Construction Observer	$70 - $140
Draftsman	$65 - $95
Environmental Scientist/Designer	$105 - $120
Geotech Engineer	$85 - $170
HR/Payroll Admin	$75-$100
Landscape Architect	$90 - $140
Media Specialist	$80 - $100
Principal	$160 - $230
Project Accountant	$70 - $155
Project Designer	$80 - $140
Project Engineer	$120 - $175
Project Manager	$120 - $200
Registered Land Surveyor	$95 - $140
Soils Lab Technician	$50 - $135
Specification Writer	$50 - $90
Sr. Project Manager	$140 - $230
Survey (2 man or Robotic) Crew	$115 - $160
Survey (3 man) Crew	$135 - $195
Survey Field (1 Man or Rodman)	$45 - $105
Survey GPS	$75 - $130
Survey Technician	$65 - $95
Water Lab Supervisor	$70 - $120
Water Lab Tech	$50 - $95
Expenses	@ Cost
Mileage	.560/mi

** Standard Hourly Rates may be adjusted annually in accordance with the normal salary review practices of McClelland Consulting Engineers.*

RESOLUTION NO. _____

A RESOLUTION AUTHORIZING THE MAYOR TO ENTER INTO AN AGREEMENT WITH MCCLELLAND CONSULTING ENGINEERS, INC., FOR ENGINEERING AND PROJECT SERVICES FOR WATER TOWER ROAD PH3.

NOW, THEREFORE, BE IT RESOLVED BY THE CITY COUNCIL FOR THE CITY OF BENTONVILLE, ARKANSAS.

Section 1: That the Mayor be and is hereby authorized to enter into an agreement with McClelland Consulting Engineers, Inc. for engineering and project services for Water Tower Road PH3 in an amount of $518,477 as set forth in the Professional Services Agreement attached hereto as Exhibit "A".

Section 2: This resolution shall be in full force and effect from and after the date of its passage.

PASSED and APPROVED this _____ day of _____, 2021.

APPROVED:

_____
MAYOR

ATTEST:

_____
CITY CLERK

Agenda Item Form

Date of City Council Meeting	**6/22/2021**
Department	**Engineering**
Submitted by	**Dan Weese**
Phone	**(479) 254-2024**

Item Type: (*Check Applicable Item Type*)					
☐ Budget Adjustment	☐ Change Order	☐ Informational	☐ Ordinance	☑ Resolution	☐ Bid Award

Recommendation/Suggested Action *(Enter recommendation in space below):*

Resolution allowing the Mayor to enter into a professional services agreement with Crafton, Tull & Associates, Inc. for engineering and project services for SW I & SW 41st Intersection. The cost of this contract will be $346,000.00. This Firm was selected following the City's standard RFQ solicitation and selection process for the procurement of professional services in accordance with state law.

Estimated Cost	**$346,000.00**
Is this Item Budgeted?	☐ Yes ☑ No

If no, please explain how item will be funded *(briefly explain in space below)* **:**

This project is part of the Bond program.

Memorandum

To: Mayor and City Council

From: Dan Weese, City Engineer

Date: Thursday, June 10, 2021

Re: PSA for SW I & SW 41st Intersection

Project Description:

Intersection improvements at SW I and SW 41St including a traffic signal or round-a-bout subject to ARDOT approval.

Crafton, Tull & Associates, Inc. has been selected to perform all related engineering services needed for this project. This Professional Services Agreement (PSA) amount for this project is $346,000.00.

Staff requests approval of a resolution allowing the Mayor to enter into a PSA with Crafton, Tull & Associates, Inc. for this project.

Please contact me with any questions or concerns regarding this PSA or the project as a whole. My telephone number is (479) 254-2024 or I can be reached via email at dweese@bentonvillear.com

Munis # 21ST0013

PROFESSIONAL SERVICES AGREEMENT

PROJECT NAME: SW I & SW 41ST INTERSECTION ("PROJECT")

THIS AGREEMENT ("AGREEMENT") is made in Benton County, Arkansas, by and between the City of Bentonville, Arkansas, hereinafter referred to as "CITY", and CRAFTON, TULL & ASSOCIATES, INC., hereinafter referred to as "ENGINEER" (collectively, the "PARTIES").

The PARTIES have caused this AGREEMENT to be effective this ____day of _____, 20___ ("EFFECTIVE DATE").

RECITALS:

A. WHEREAS, the CITY has a need to perform capital improvement projects for the City of Bentonville, Arkansas; and

B. WHEREAS, The CITY has selected the ENGINEER and negotiated this AGREEMENT using the procedures as set forth in Ark. Code Ann. § 19-11-800; and

C. WHEREAS, the CITY wishes to contract for Professional Services; and

D. WHEREAS, The ENGINEER has the skill, experience, ability, background, certifications and knowledge to provide these services; and

E. WHEREAS, The ENGINEER wishes to perform such professional services under this AGREEMENT with the CITY.

NOW, THEREFORE, in consideration of the terms in this AGREEMENT, the CITY and ENGINEER agree to the following:

ARTICLE I - PROJECT DESCRIPTION

The PROJECT shall be as described in APPENDIX A. "Project Description", attached hereto and incorporated herein by reference.

ARTICLE II - SCOPE OF SERVICE

Upon issuance of a written Notice to Proceed by the CITY, ENGINEER agrees to provide the CITY the necessary professional services related to the PROJECT, as set forth in APPENDIX B, "Scope of Services" ("SCOPE"), attached hereto and incorporated herein by reference.

ARTICLE III - STANDARD OF CARE

ENGINEER shall at all times material hereto adhere to the generally accepted standard of care typically exhibited by similarly situated professionals performing similar scope(s) of service on projects of like size, scope, nature, cost, schedule, and complexity, at the same time and in the same general regional locale ("Standard of Care").

ARTICLE IV - ADDITIONAL SERVICES

A. Any service outside of the work described herein or included by reference hereto must be pre-approved by the CITY and executed as an AMENDMENT to this AGREEMENT by the Parties prior to any such work being completed; any such AMENDMENT shall be in accordance with the CITY'S purchasing laws and guidelines and may require approval from the Bentonville City Council.

B. ENGINEER shall make no claims for additional services or changes in the services until an AMENDMENT has been fully executed by the Parties.

ARTICLE V - SCHEDULE OF FEES, SERVICES AND PAYMENT

A. The term of this AGREEMENT shall commence on the EFFECTIVE DATE and shall proceed in accordance with APPENDIX C, "Schedule of Fees and Services, Key Milestones, and Durations for Major Tasks", attached hereto and incorporated herein by reference.

B. The cost of this AGREEMENT shall be in accordance with APPENDIX C.

C. CITY agrees to pay ENGINEER for all services authorized by inclusion in this AGREEMENT which have been properly performed by ENGINEER in accordance with this AGREEMENT.

D. All fees paid to ENGINEER shall be based on invoices submitted by ENGINEER for work performed under this AGREEMENT, less any previous payments. ENGINEER shall submit invoices for services related to this AGREEMENT on a monthly basis.

E. CITY reserves the right to delay, without penalty, any partial payment when, in the opinion of the CITY, ENGINEER has not made satisfactory progress on the Project based on the SCOPE. If CITY objects to any portion of an invoice, the CITY shall notify ENGINEER and shall pay all other portions of the invoice which are not in dispute. In the event of dispute, CITY and ENGINEER shall immediately make every effort to settle the disputed portion of the invoice.

F. In the event that the CITY becomes credibly informed that any representations of ENGINEER provided in its invoicing are wholly or partially inaccurate, CITY may withhold payment of sums then, or in the future, otherwise due to ENGINEER until the inaccuracy and the cause thereof is corrected to the CITY's reasonable satisfaction.

G. If the CITY fails to make any payment, not in dispute, due to ENGINEER within thirty (30) days after receipt of an invoice, then the amount due to the ENGINEER will increase at the lesser of one percent (1 %) per month or the maximum amount allowed by law after the 30th day. In addition, ENGINEER may, after giving seven (7) days' written notice to CITY, suspend its services and any deliverables until ENGINEER has been paid in full for all amounts outstanding more than thirty (30) days.

ARTICLE VI - INSURANCE

A. ENGINEER shall during the term hereof maintain in full force and effect the following insurance:

1. A comprehensive general liability policy of insurance for bodily injury, death and property damage insuring against all claims, demands or actions relating to the ENGINEER's performance of services pursuant to this AGREEMENT with a combined single limit of not less than $1,000,000.00 per occurrence and $2,000,000 in the aggregate for injury to persons (including death), and for property damage;
2. A policy of automobile liability insurance covering any vehicles owned and/or operated by ENGINEER, its officers, agents, and employees, and used in the performance of this AGREEMENT with policy limits of not less than $1,000,000.00 combined single limit and aggregate for bodily injury and property damage;
3. Statutory Worker's Compensation Insurance at the statutory limits and Employers Liability covering all of ENGINEER's employees involved in the provision of services under this AGREEMENT with policy limit of not less than $1,000,000.00; and
4. Professional Liability/Errors and Omissions coverage covering negligent acts, errors and omissions in the performance of professional services with policy limit of not less than $1,000,000.00.

B. All insurance and certificate(s) of insurance shall contain the following provisions:

1. Include CITY as additional insured as to all applicable coverage with the exception of Workers Compensation Insurance and Professional Liability/Errors and Omissions coverage; and
2. provide for at least thirty (30) days prior written notice to CITY for cancellation or non-renewal of the insurance;
3. provide for a waiver of subrogation against CITY for injuries, including death, property damage, or any other loss to the extent the same is covered by the proceeds of insurance, except for Professional Liability/Errors and Omissions coverage.

C. ENGINEER shall provide 30 day written notice to CITY of any material change of or to the insurance required herein.

D. All insurance companies providing the required insurance shall be authorized to transact business in Arkansas and rated at least "A" by AM Best or other equivalent rating service. A certificate of insurance evidencing the required insurance and all endorsements required by this Agreement shall be submitted prior to commencement of services.

E. In the event that additional or greater insurance requirements are warranted, these requirements shall be included as an Appendix, which will be attached hereto and incorporated by reference.

ARTICLE VII - RIGHT OF ACCESS

A. CITY will obtain and/or furnish right-of-access for ENGINEER to perform any required studies, surveys, tests or other necessary investigations in relation to the PROJECT.

B. ENGINEER will take reasonable precautions to minimize damage to the personal or real property in the performance of such surveys, tests, studies and investigations.

C. CITY recognizes that ENGINEER's operations and use of equipment may unavoidably alter existing conditions or affect the environment at the PROJECT site. The cost of repairing such damage shall be the responsibility of ENGINEER, at no additional cost to the CITY. In the event that ENGINEER fails to correct such damages, CITY is entitled to utilize CITY forces or other labor to repair the damage; any costs incurred by CITY for such work shall be deducted from the monies due to ENGINEER.

ARTICLE VIII - RECORDS AND RETENTION

A. All surveys, studies, proposals, applications, drawings, plans, specifications and other documents, including those in electronic form, prepared by ENGINEER and its ENGINEERs, subcontractors, agents, representatives, and/or employees in connection with this AGREEMENT ("PROJECT DOCUMENTS") are intended for the use and benefit of CITY. ENGINEER and its ENGINEERs, subcontractors, agents, representatives, and/or employees shall be deemed the authors of their respective part of the PROJECT DOCUMENTS. Notwithstanding anything to the contrary, CITY shall own, have, and retain all rights, title and interest in and to all PROJECT DOCUMENTS, whether in draft form or final form, which are produced at CITY's request or otherwise produced from ENGINEER's performance of the work described herein for CITY. The CITY's ownership of PROJECT DOCUMENTS shall not apply to ENGINEER's proprietary standard details that were developed by the ENGINEER prior to the commencement of this PROJECT.

B. CITY shall have full authority to reuse, reproduce, publish, disclose and distribute PROJECT DOCUMENTS, as needed, according to Arkansas State Law.

C. ENGINEER shall, upon completion of the services and full payment for the ENGINEER'S services by the CITY, or earlier termination and appropriate compensation as provided by this AGREEMENT, provide the CITY with all PROJECT DOCUMENTS prepared by ENGINEER pursuant to this AGREEMENT in formats requested by the CITY.

D. All instruments of service (including plans, specifications, drawings, reports, designs, computations, computer programs, estimates, surveys, other data or work items, etc.) prepared under this AGREEMENT shall be submitted for approval to the CITY. All instruments of service shall be professionally sealed in accordance to applicable laws or at CITY's request.

E. Acceptance and approval of the PROJECT DOCUMENTS by the CITY shall not constitute nor be deemed a release of the responsibility and liability of ENGINEER, its employees, associates, agents and ENGINEERs for the accuracy or competency of their designs, working drawings and specifications, or other documents and work; nor shall such approval be deemed to be an assumption of such responsibility by the CITY for any defect in the designs, working drawings and specifications, or other documents prepared by ENGINEER, its employees, contractor, agents and ENGINEERs.

F. ENGINEER will retain the PROJECT DOCUMENTS for a period of three years following project completion. During this three year period, any requests for document recovery and reproduction will be assessed a fee in accordance with ENGINEER's FEES.

ARTICLE IX - SAFETY

A. CITY agrees to inform ENGINEER of any applicable site safety procedures and regulations known to CITY as well as any special safety concerns or dangerous conditions at the site of which the CITY is aware, which ENGINEER shall communicate to its employees. ENGINEER and its employees shall adhere to such procedures and regulations once notice has been given by the CITY.

B. Unless specifically provided in the SCOPE, ENGINEER shall not have any responsibility for overall job safety at the site. If in the ENGINEER's opinion, its field personnel are unable to access required locations or perform required services in conformance with applicable safety standards, ENGINEER may immediately suspend performance until such safety standards can be attained.

C. ENGINEER agrees to indemnify and hold harmless the CITY for any safety conditions that may arise out of ENGINEER's performance of this AGREEMENT.

ARTICLE X - TERMINATION

A. CITY may suspend or terminate this AGREEMENT for cause or without cause at any time by giving written notice to ENGINEER. In the event suspension or termination is without cause, payment to ENGINEER, in accordance with the terms of this AGREEEMENT, will be made on the basis of services reasonably determined by the CITY to be satisfactorily performed to the date of suspension or termination. Such payment will be due upon delivery of all instruments of service to CITY.

B. Should the CITY require a modification of this AGREEMENT with the ENGINEER, and in the event the CITY and ENGINEER fail to agree upon a modification to this AGREEMENT, the CITY shall have the option of terminating this AGREEMENT and the ENGINEER's services hereunder at no additional cost other than the payment to ENGINEER, in accordance with the terms of this AAGREEMENT, for the services reasonably determined by the CITY to be properly performed by ENGINEER prior to such termination date.

C. If, for whatever adequate funding is not made available by CITY to support or justify continuation of the level of services to be provided by ENGINEER under this AGREEMENT, CITY may terminate or reduce the amount of services to be provided by ENGINEER under this AGREEMENT. In such event, CITY will notify ENGINEER in writing at least thirty (30) days in advance of such termination or reduction of services for lack of funds.

D. In no event shall the CITY pay to ENGINEER fees for termination outside of payment for services reasonably determined by the City to be properly performed prior to termination.

ARTICLE XI - INDEMNIFICATION

A. For purposes of this AGREEMENT, ENGINEER agrees to indemnify, hold harmless the CITY, its officers and employees from any loss, damage, liability or expense, of any nature whatsoever to the extent caused by the negligence, willful misconduct, or other actionable fault of ENGINEER, its affiliates, subsidiaries, employees, agents, assignees, and subcontractors and their respective employees and agents. ENGINEER is not required hereunder to defend the CITY, its officers, appointees, employees, or agents from assertions that they were negligent, nor to indemnify and hold them harmless from liability based on the CITY's negligence

B. Nothing contained herein shall waive any governmental immunity CITY may be entitled to by law.

C. This provision shall survive the termination of this AGREEMENT.

ARTICLE XII - CONTINGENCY CLAUSE

A. The CITY may add a contingency amount to the contract to cover additional services as described in APPENDIX B. Any use of such contingency funds for additional services shall be executed as an AMENDMENT to this AGREEMENT.

B. The Contingency shall in no manner substitute for an official AMENDMENT.

ARTICLE XIII - RELATIONSHIP OF THE PARTIES

It is understood and agreed by and between the parties that the ENGINEER, in satisfying the conditions of this AGREEMENT, is acting independently, and that the CITY assumes no responsibility or liabilities to any third party in connection with ENGINEER's actions. All services to be performed by the ENGINEER pursuant to this AGREEMENT shall be in the capacity of an Independent Contractor, and not as an agent or employee of CITY. The ENGINEER shall supervise the performance of its services and shall be entitled to control the manner and means by which its services are to be performed, subject to the terms of this AGREEMENT. There is no intended third party beneficiary to the AGREEMENT and nothing contained herein shall create a contractual relationship with, or any rights in favor of, any third party.

ARTICLE XIV - DISPUTE RESOLUTION

A. CITY and ENGINEER agree that disputes relative to the services will first be addressed by negotiations between the Parties. If direct negotiations fail to resolve the dispute, the Party initiating the claim that is the basis for dispute may take such steps as it deems necessary to protect its interests; provided, however, that notwithstanding any such dispute, ENGINEER will proceed with the services as per this AGREEMENT as if no dispute existed, and CITY will continue to make payment for ENGINEER's completed services; and provided further that no dispute will be submitted to arbitration without both Parties' express written consent.

ARTICLE XV - OPINIONS OF PROBABLE COST

A. Since the ENGINEER has no control over the cost of labor, materials, equipment or services furnished by others, or over methods of determining prices, or over competitive bidding or market conditions, the ENGINEER's estimates of PROJECT costs and construction costs provided for herein are to be made on the basis of the ENGINEER's experience and qualifications and represent the ENGINEER's judgement in accordance with the "Standard of Care". The ENGINEER cannot and does not guarantee that proposals, bids or actual PROJECT or construction costs will not vary from estimates prepared by the ENGINEER.

B. The CITY understands that the construction cost estimates developed by the ENGINEER do not establish a limit for construction contract amount. If the actual amount of the low construction bid exceeds the construction budget established by the CITY, the ENGINEER will not be required to re-design the PROJECT or any part thereof without additional compensation.

ARTICLE XVI - APPLICABLE LAWS

ENGINEER shall comply with all Federal, State, Local laws, ordinances, resolutions, specifications, regulations and all other laws or regulations relating or applicable to service to be performed under this AGREEMENT. Interpretation of this AGREEMENT and disputes arising out of or related to this AGREEMENT will be subject to and governed by the laws of the State of Arkansas. Jurisdiction and venue for any suit arising out of or related to this AGREEMENT will be in the District Court of Benton County, Arkansas,

ARTICLE XVII - PRECEDENCE

This AGREEMENT shall take precedence over any inconsistent of contradictory provisions contained in any proposal, contract, purchase order, requisition, notice to proceed, or any other like document regarding the PROJECT or ENGINEER's services.

ARTICLE XVIII - SEVERABILITY

A. In the event that one or more provisions contained herein shall, for any reason, be deemed invalid, illegal, void or unenforceable, in whole or in part, the remaining provisions hereof shall remain in full force and effect.

B. In the event that any provision hereof is in conflict with any statutory provision of the State of Arkansas, said provision, which may be in conflict therewith, shall be deemed inoperative, null and void insofar as it may be in conflict therewith, and shall be deemed modified to conform to such statutory provisions; provided, however, that the remaining provisions of this AGREEMENT will be unaffected and will continue to be valid and enforceable.

ARTICLE XIX - SURVIVAL OF OBLIGATIONS

The obligations of the Parties contained in this AGREEMENT, which by their nature survive after the term of the AGREEMENT, shall survive the termination or expiration of this AGREEMENT and continue indefinitely or as otherwise provided by this AGREEMENT.

ARTICLE XIX – ENTIRE AGREEMENT

This AGREEMENT, including all documents and Appendices included by reference herein, constitutes the entire agreement between the PARTIES and supersedes all prior agreements, whether oral or written, covering the same subject matter. This AGREEMENT may not be modified or amended except in writing, mutually agreed upon and accepted by both PARTIES to this AGREEMENT.

The cost of this AGREEMENT including all reimbursable expenses as described in the FEES AND SCHEDULE, **shall not exceed** Three Hundred Forty-Six Thousand Dollars and zero cents ($346,000.00), unless otherwise approved by the CITY through an official AMENDMENT agreed and executed by CITY and ENGINEER.

IN WITNESS THEREOF, the CITY and ENGINEER have executed this AGREEMENT, the EFFECTIVE DATE of which is indicated on page 1 of this AGREEMENT.

CITY OF BENTONVILLE	**CRAFTON, TULL & ASSOC., INC.**
CITY	ENGINEER
	[redacted] Digitally signed by Bill Burnett, P.E., Vice President DN: C=US, E=bill.burnett@craftontull.com, O=Crafton Tull, OU=Infrastructure, CN="Bill Burnett, P.E., Vice President" Reason: I agree to the terms defined by the placement of my signature on this document Date: 2021.06.04 14:54:18-05'00'
BY	BY
MAYOR	**VICE PRESIDENT**
TITLE	TITLE
DATE SIGNED	DATE SIGNED

APPENDIX A
PROJECT DESCRIPTION

BASIC PROJECT INFORMATION:

CONSTRUCT INTERSECTION IMPROVMENTS TO SW I STREET AND SW 41ST STREET TO A ROUNDABOUT WITH PEDESTRIAN / BICYCLE FACILITIES THAT ARE CONSISTENT WITH THE CITY OF BENTONVILLE'S BICYCLE AND PEDESTRIAN MASTER PLAN.

APPENDIX B
SCOPE OF SERVICES

SERVICES BY THE CITY

- Furnish required information and approvals and perform responsibilities and activities in a timely manner to facilitate orderly progress of the work.
- Provide criteria and information as to the requirements for the PROJECT, including design objectives and constraints, right-of-way, capacity and performance requirements, and any budgetary limitations.
- Furnish copies of design and construction standards that the CITY will require to be included in the drawings and specifications.
- Assist the ENGINEER by placing at their disposal all available information pertinent to the PROJECT, including previous reports and other data relative to design or construction of the PROJECT.
- Arrange for access to public and private property as required for the PROJECT.
- Obtain the necessary lands, easements and rights-of-way for the PROJECT.
- Reimburse all plan review, advertising costs, permits and approvals in connection with the PROJECT.
- Pay the ENGINEER is accordance with the terms of the AGREEMENT.

If the CITY observes or otherwise becomes aware of any fault or defect in the PROJECT, the CITY shall give prompt written notice thereof to the ENGINEER.

SERVICES BY THE ENGINEER

- Meet all requirements of the AGREEMENT including any AMENDMENTS.
- Produce all documents and services needed for the PROJECT, including but not limited to:

  Topographical surveys, Right-of-Way Surveys, Utility Surveys and Coordination, Traffic Study, Geotechnical Investigations, Environmental Surveys, Permitting, Major Drainage Study, Conceptual Design Phase (30%), Preliminary Design Phase (60%), Final Design Phase (90%), Public Meetings, Bidding Services, Construction Support Services, Project Management Services, Project Closeout.
- Project Management services for the entire life of the project that align with the Project Management Institute Project Management Book of Knowledge Latest Edition.
- All Design and Construction shall conform to Federal, State and Local regulations.
- Coordinate PROJECT with Franchise Utility Companies to assure adequate space for all facilities and timely relocations.
- Coordinate and Furnish approvals and permits from all Regulatory Agencies having jurisdiction over the PROJECT.
- Provide all services relevant to City of Bentonville Plan Review procedures.
- Create and provide all documents for property acquisitions and assist with any layout or staking required.
- Coordinate and facilitate meetings with CITY and Agencies for plan review, project coordination and right-of-way.
- Subcontracting of services by the ENGINEER shall have prior approval of the CITY.

APPENDIX C

SCHEDULE OF FEES AND SERVICES, KEY MILESTONES, AND DURATIONS FOR MAJOR TASKS

Tasks performed shall be paid for at an amount equal to the cumulative hours charged to the Project by each class of Engineer's employees times standard hourly rates for each applicable billing class. Major tasks with estimated fees are shown below. Overruns and underruns associated with each task may offset one another as long as the overall fee is not exceeded.

TASK	**DURATION***	**ESTIMATED FEE**
Topographic & Land Surveying	1 month	$35,000
30% - Conceptual Design	2 months	$30,000
60% - Preliminary Design	4 months	$70,000
90% - Final Design	3 months	$50,000
ROW Acquisition	6 months	$10,000
Utility Relocation	6 months	$15,000
Bid Letting / Award	1 month	$10,000
Construction Administration	10 months	$100,000
Subconsultants (Geotech Eng., Construction Materials Testing, Title Co.)		$24,000
Reimbursables		$2,000
NOT-TO-EXCEED FEE TOTAL		**$346,000**

* Duration does not include review times for government agencies outside of our control.

Items Excluded from above fee schedule that can be added by contract amendment:

- Wetland determinations
- Traffic study (previously done for signals)
- Retaining wall design
- Landscaping design
- Offsite utility or street extensions

RESOLUTION NO. _____

A RESOLUTION AUTHORIZING THE MAYOR TO ENTER INTO AN AGREEMENT WITH CRAFTON, TULL & ASSOCIATES, INC., FOR ENGINEERING AND PROJECT SERVICES FOR SW I & SW 41ST INTERSECTION.

NOW, THEREFORE, BE IT RESOLVED BY THE CITY COUNCIL FOR THE CITY OF BENTONVILLE, ARKANSAS.

Section 1: That the Mayor be and is hereby authorized to enter into an agreement with Crafton, Tull & Associates, Inc. for engineering and project services for SW I & SW 41st Intersection in an amount of $346,000.00 as set forth in the Professional Services Agreement attached hereto as Exhibit "A".

Section 2: This resolution shall be in full force and effect from and after the date of its passage.

PASSED and APPROVED this _____ day of _____, 2021.

APPROVED:

_____
MAYOR

ATTEST:

_____
CITY CLERK

Agenda Item Form

Date of City Council Meeting	**6/22/2021**
Department	**Engineering**
Submitted by	**Dan Weese**
Phone	**(479) 254-2024**

Item Type: (*Check Applicable Item Type*)					
☐ Budget Adjustment	☐ Change Order	☐ Informational	☐ Ordinance	☑ Resolution	☐ Bid Award

Recommendation/Suggested Action *(Enter recommendation in space below):*

Resolution allowing the Mayor to enter into a professional service agreement with CEI Engineering Associates for engineering and project services for SW 3rd and C Laterals. The cost of this agreement will be $196,287.00. This Firm was selected following the City's standard RFQ solicitation and selection process for the procurement of professional services in accordance with state law.

Estimated Cost	**$196,287.00**
Is this Item Budgeted?	☐ Yes ☑ No

If no, please explain how item will be funded *(briefly explain in space below)* **:**

This project is part of the Bond program.

Memorandum

To: Mayor and City Council

From: Dan Weese, City Engineer

Date: Thursday, June 10, 2021

Re: Professional Services Agreement for SW 3rd and C Laterals

---

Project Description: SW 3rd and C Laterals (Drainage Project, MUNIS # 21EN0022)

Local lateral to direct poorly drained areas to the new 48" collector on SW B Street.

CEI Engineering Associates has been selected to perform all related engineering services needed for this project. This Professional Services Agreement (PSA) amount for this project is $196,287.00.

Staff requests approval of a resolution allowing the Mayor to enter into a PSA with CEI Engineering Associates for this project.

Please contact me with any questions or concerns regarding this PSA or the project. My telephone number is (479) 254-2024 or I can be reached via email at dweese@bentonvillear.com

PROFESSIONAL SERVICES AGREEMENT

PROJECT NAME: **SW 3rd and C LATERALS (MUNIS# 21EN0022)** ("PROJECT")

THIS AGREEMENT ("AGREEMENT") is made in Benton County, Arkansas, by and between the City of Bentonville, Arkansas, hereinafter referred to as "CITY", and CEI Engineering Associates, Inc., hereinafter referred to as "ENGINEER" (collectively, the "PARTIES").

The PARTIES have caused this AGREEMENT to be effective this ____ day of _____ , 20 ____ ("EFFECTIVE DATE").

RECITALS:

A. WHEREAS, the CITY has a need to perform capital improvement projects for the City of Bentonville, Arkansas; and

B. WHEREAS, The CITY has selected the ENGINEER and negotiated this AGREEMENT using the procedures as set forth in Ark. Code Ann. § 19-11-800; and

C. WHEREAS, the CITY wishes to contract for Professional Services; and

D. WHEREAS, The ENGINEER has the skill, experience, ability, background, certifications and knowledge to provide these services; and

E. WHEREAS, The ENGINEER wishes to perform such professional services under this AGREEMENT with the CITY.

NOW, THEREFORE, in consideration of the terms in this AGREEMENT, the CITY and ENGINEER agree to the following:

ARTICLE I - PROJECT DESCRIPTION

The PROJECT shall be as described in APPENDIX A. "Project Description", attached hereto and incorporated herein by reference.

ARTICLE II - SCOPE OF SERVICE

Upon issuance of a written Notice to Proceed by the CITY, ENGINEER agrees to provide the CITY the necessary professional services related to the PROJECT, as set forth in APPENDIX B, "Scope of Services" ("SCOPE"), attached hereto and incorporated herein by reference.

ARTICLE III - STANDARD OF CARE

ENGINEER shall at all times material hereto adhere to the generally accepted standard of care typically exhibited by similarly situated professionals performing similar scope(s) of service on projects of like size, scope, nature, cost, schedule, and complexity, at the same time and in the same general regional locale ("Standard of Care").

ARTICLE IV - ADDITIONAL SERVICES

A. Any service outside of the work described herein or included by reference hereto must be pre-approved by the CITY and executed as an AMENDMENT to this AGREEMENT by the Parties prior to any such work being completed; any such AMENDMENT shall be in accordance with the CITY'S purchasing laws and guidelines and may require approval from the Bentonville City Council.

B. ENGINEER shall make no claims for additional services or changes in the services until an AMENDMENT has been fully executed by the Parties.

ARTICLE V - SCHEDULE OF FEES, SERVICES AND PAYMENT

A. The term of this AGREEMENT shall commence on the EFFECTIVE DATE and shall proceed in accordance with APPENDIX C, "Schedule of Fees and Services, Key Milestones, and Durations for Major Tasks", attached hereto and incorporated herein by reference.

B. The cost of this AGREEMENT shall be in accordance with APPENDIX C.

C. CITY agrees to pay ENGINEER for all services authorized by inclusion in this AGREEMENT which have been properly performed by ENGINEER in accordance with this AGREEMENT.

D. All fees paid to ENGINEER shall be based on invoices submitted by ENGINEER for work performed under this AGREEMENT, less any previous payments. ENGINEER shall submit invoices for services related to this AGREEMENT on a monthly basis.

E. CITY reserves the right to delay, without penalty, any partial payment when, in the opinion of the CITY, ENGINEER has not made satisfactory progress on the Project based on the SCOPE. If CITY objects to any portion of an invoice, the CITY shall notify ENGINEER and shall pay all other portions of the invoice which are not in dispute. In the event of dispute, CITY and ENGINEER shall immediately make every effort to settle the disputed portion of the invoice.

F. In the event that the CITY becomes credibly informed that any representations of ENGINEER provided in its invoicing are wholly or partially inaccurate, CITY may withhold payment of sums then, or in the future, otherwise due to ENGINEER until the inaccuracy and the cause thereof is corrected to the CITY's reasonable satisfaction.

G. If the CITY fails to make any payment, not in dispute, due to ENGINEER within thirty (30) days after receipt of an invoice, then the amount due to the ENGINEER will increase at the lesser of one percent (1 %) per month or the maximum amount allowed by law after the 30th day. In addition, ENGINEER may, after giving seven (7) days' written notice to CITY, suspend its services and any deliverables until ENGINEER has been paid in full for all amounts outstanding more than thirty (30) days.

ARTICLE VI - INSURANCE

A. ENGINEER shall during the term hereof maintain in full force and effect the following insurance:

1. A comprehensive general liability policy of insurance for bodily injury, death and property damage insuring against all claims, demands or actions relating to the ENGINEER's performance of services pursuant to this AGREEMENT with a combined single limit of not less than $1,000,000.00 per occurrence and $2,000,000 in the aggregate for injury to persons (including death), and for property damage;
2. A policy of automobile liability insurance covering any vehicles owned and/or operated by ENGINEER, its officers, agents, and employees, and used in the performance of this AGREEMENT with policy limits of not less than $1,000,000.00 combined single limit and aggregate for bodily injury and property damage;
3. Statutory Worker's Compensation Insurance at the statutory limits and Employers Liability covering all of ENGINEER's employees involved in the provision of services under this AGREEMENT with policy limit of not less than $1,000,000.00; and
4. Professional Liability/Errors and Omissions coverage covering negligent acts, errors and omissions in the performance of professional services with policy limit of not less than $1,000,000.00.

B. All insurance and certificate(s) of insurance shall contain the following provisions:

1. Include CITY as additional insured as to all applicable coverage with the exception of Workers Compensation Insurance and Professional Liability/Errors and Omissions coverage; and
2. provide for at least thirty (30) days prior written notice to CITY for cancellation or non-renewal of the insurance;
3. provide for a waiver of subrogation against CITY for injuries, including death, property damage, or any other loss to the extent the same is covered by the proceeds of insurance, except for Professional Liability/Errors and Omissions coverage.

C. ENGINEER shall provide 30 day written notice to CITY of any material change of or to the insurance required herein.

D. All insurance companies providing the required insurance shall be authorized to transact business in Arkansas and rated at least "A" by AM Best or other equivalent rating service. A certificate of insurance evidencing the required insurance and all endorsements required by this Agreement shall be submitted prior to commencement of services.

E. In the event that additional or greater insurance requirements are warranted, these requirements shall be included as an Appendix, which will be attached hereto and incorporated by reference.

ARTICLE VII - RIGHT OF ACCESS

A. CITY will obtain and/or furnish right-of-access for ENGINEER to perform any required studies, surveys, tests or other necessary investigations in relation to the PROJECT.

B. ENGINEER will take reasonable precautions to minimize damage to the personal or real property in the performance of such surveys, tests, studies and investigations.

C. CITY recognizes that ENGINEER's operations and use of equipment may unavoidably alter existing conditions or affect the environment at the PROJECT site. The cost of repairing such damage shall be the responsibility of ENGINEER, at no additional cost to the CITY. In the event that ENGINEER fails to correct such damages, CITY is entitled to utilize CITY forces or other labor to repair the damage; any costs incurred by CITY for such work shall be deducted from the monies due to ENGINEER.

ARTICLE VIII - RECORDS AND RETENTION

A. All surveys, studies, proposals, applications, drawings, plans, specifications and other documents, including those in electronic form, prepared by ENGINEER and its ENGINEERs, subcontractors, agents, representatives, and/or employees in connection with this AGREEMENT ("PROJECT DOCUMENTS") are intended for the use and benefit of CITY. ENGINEER and its ENGINEERs, subcontractors, agents, representatives, and/or employees shall be deemed the authors of their respective part of the PROJECT DOCUMENTS. Notwithstanding anything to the contrary, CITY shall own, have, and retain all rights, title and interest in and to all PROJECT DOCUMENTS, whether in draft form or final form, which are produced at CITY's request or otherwise produced from ENGINEER's performance of the work described herein for CITY. The CITY's ownership of PROJECT DOCUMENTS shall not apply to ENGINEER's proprietary standard details that were developed by the ENGINEER prior to the commencement of this PROJECT.

B. CITY shall have full authority to reuse, reproduce, publish, disclose and distribute PROJECT DOCUMENTS, as needed, according to Arkansas State Law.

C. ENGINEER shall, upon completion of the services and full payment for the ENGINEER'S services by the CITY, or earlier termination and appropriate compensation as provided by this AGREEMENT, provide the CITY with all PROJECT DOCUMENTS prepared by ENGINEER pursuant to this AGREEMENT in formats requested by the CITY.

D. All instruments of service (including plans, specifications, drawings, reports, designs, computations, computer programs, estimates, surveys, other data or work items, etc.) prepared under this AGREEMENT shall be submitted for approval to the CITY. All instruments of service shall be professionally sealed in accordance to applicable laws or at CITY's request.

E. Acceptance and approval of the PROJECT DOCUMENTS by the CITY shall not constitute nor be deemed a release of the responsibility and liability of ENGINEER, its employees, associates, agents and ENGINEERs for the accuracy or competency of their designs, working drawings and specifications, or other documents and work; nor shall such approval be deemed to be an assumption of such responsibility by the CITY for any defect in the designs, working drawings and specifications, or other documents prepared by ENGINEER, its employees, contractor, agents and ENGINEERs.

F. ENGINEER will retain the PROJECT DOCUMENTS for a period of three years following project completion. During this three year period, any requests for document recovery and reproduction will be assessed a fee in accordance with ENGINEER's FEES.

ARTICLE IX - SAFETY

A. CITY agrees to inform ENGINEER of any applicable site safety procedures and regulations known to CITY as well as any special safety concerns or dangerous conditions at the site of which the CITY is aware, which ENGINEER shall communicate to its employees. ENGINEER and its employees shall adhere to such procedures and regulations once notice has been given by the CITY.

B. Unless specifically provided in the SCOPE, ENGINEER shall not have any responsibility for overall job safety at the site. If in the ENGINEER's opinion, its field personnel are unable to access required locations or perform required services in conformance with applicable safety standards, ENGINEER may immediately suspend performance until such safety standards can be attained.

C. ENGINEER agrees to indemnify and hold harmless the CITY for any safety conditions that may arise out of ENGINEER's performance of this AGREEMENT.

ARTICLE X - TERMINATION

A. CITY may suspend or terminate this AGREEMENT for cause or without cause at any time by giving written notice to ENGINEER. In the event suspension or termination is without cause, payment to ENGINEER, in accordance with the terms of this AGREEMENT, will be made on the basis of services reasonably determined by the CITY to be satisfactorily performed to the date of suspension or termination. Such payment will be due upon delivery of all instruments of service to CITY.

B. Should the CITY require a modification of this AGREEMENT with the ENGINEER, and in the event the CITY and ENGINEER fail to agree upon a modification to this AGREEMENT, the CITY shall have the option of terminating this AGREEMENT and the ENGINEER's services hereunder at no additional cost other than the payment to ENGINEER, in accordance with the terms of this AGREEMENT, for the services reasonably determined by the CITY to be properly performed by ENGINEER prior to such termination date.

C. If, for whatever adequate funding is not made available by CITY to support or justify continuation of the level of services to be provided by ENGINEER under this AGREEMENT, CITY may terminate or reduce the amount of services to be provided by ENGINEER under this AGREEMENT. In such event, CITY will notify ENGINEER in writing at least thirty (30) days in advance of such termination or reduction of services for lack of funds.

D. In no event shall the CITY pay to ENGINEER fees for termination outside of payment for services reasonably determined by the City to be properly performed prior to termination.

ARTICLE XI - INDEMNIFICATION

A. For purposes of this AGREEMENT, ENGINEER agrees to indemnify, hold harmless the CITY, its officers and employees from any loss, damage, liability or expense, of any nature whatsoever to the extent caused by the negligence, willful misconduct, or other actionable fault of ENGINEER, its affiliates, subsidiaries, employees, agents, assignees, and subcontractors and their respective employees and agents. ENGINEER is not required hereunder to defend the CITY, its officers, appointees, employees, or agents from assertions that they were negligent, nor to indemnify and hold them harmless from liability based on the CITY's negligence

B. Nothing contained herein shall waive any governmental immunity CITY may be entitled to by law.

C. This provision shall survive the termination of this AGREEMENT.

ARTICLE XII - CONTINGENCY CLAUSE

A. The CITY may add a contingency amount to the contract to cover additional services as described in APPENDIX B. Any use of such contingency funds for additional services shall be executed as an AMENDMENT to this AGREEMENT.

B. The Contingency shall in no manner substitute for an official AMENDMENT.

ARTICLE XIII - RELATIONSHIP OF THE PARTIES

It is understood and agreed by and between the parties that the ENGINEER, in satisfying the conditions of this AGREEMENT, is acting independently, and that the CITY assumes no responsibility or liabilities to any third party in connection with ENGINEER's actions. All services to be performed by the ENGINEER pursuant to this AGREEMENT shall be in the capacity of an Independent Contractor, and not as an agent or employee of CITY. The ENGINEER shall supervise the performance of its services and shall be entitled to control the manner and means by which its services are to be performed, subject to the terms of this AGREEMENT. There is no intended third party beneficiary to the AGREEMENT and nothing contained herein shall create a contractual relationship with, or any rights in favor of, any third party.

ARTICLE XIV - DISPUTE RESOLUTION

A. CITY and ENGINEER agree that disputes relative to the services will first be addressed by negotiations between the Parties. If direct negotiations fail to resolve the dispute, the Party initiating the claim that is the basis for dispute may take such steps as it deems necessary to protect its interests; provided, however, that notwithstanding any such dispute, ENGINEER will proceed with the services as per this AGREEMENT as if no dispute existed, and CITY will continue to make payment for ENGINEER's completed services; and provided further that no dispute will be submitted to arbitration without both Parties' express written consent.

ARTICLE XV - OPINIONS OF PROBABLE COST

A. Since the ENGINEER has no control over the cost of labor, materials, equipment or services furnished by others, or over methods of determining prices, or over competitive bidding or market conditions, the ENGINEER's estimates of PROJECT costs and construction costs provided for herein are to be made on the basis of the ENGINEER's experience and qualifications and represent the ENGINEER's judgement in accordance with the "Standard of Care". The ENGINEER cannot and does not guarantee that proposals, bids or actual PROJECT or construction costs will not vary from estimates prepared by the ENGINEER.

B. The CITY understands that the construction cost estimates developed by the ENGINEER do not establish a limit for construction contract amount. If the actual amount of the low construction bid exceeds the construction budget established by the CITY, the ENGINEER will not be required to re-design the PROJECT or any part thereof without additional compensation.

ARTICLE XVI - APPLICABLE LAWS

ENGINEER shall comply with all Federal, State, Local laws, ordinances, resolutions, specifications, regulations and all other laws or regulations relating or applicable to service to be performed under this AGREEMENT. Interpretation of this AGREEMENT and disputes arising out of or related to this AGREEMENT will be subject to and governed by the laws of the State of Arkansas. Jurisdiction and venue for any suit arising out of or related to this AGREEMENT will be in the District Court of Benton County, Arkansas,

ARTICLE XVII - PRECEDENCE

This AGREEMENT shall take precedence over any inconsistent of contradictory provisions contained in any proposal, contract, purchase order, requisition, notice to proceed, or any other like document regarding the PROJECT or ENGINEER's services.

ARTICLE XVIII - SEVERABILITY

A. In the event that one or more provisions contained herein shall, for any reason, be deemed invalid, illegal, void or unenforceable, in whole or in part, the remaining provisions hereof shall remain in full force and effect.

B. In the event that any provision hereof is in conflict with any statutory provision of the State of Arkansas, said provision, which may be in conflict therewith, shall be deemed inoperative, null and void insofar as it may be in conflict therewith, and shall be deemed modified to conform to such statutory provisions; provided, however, that the remaining provisions of this AGREEMENT will be unaffected and will continue to be valid and enforceable.

ARTICLE XIX - SURVIVAL OF OBLIGATIONS

The obligations of the Parties contained in this AGREEMENT, which by their nature survive after the term of the AGREEMENT, shall survive the termination or expiration of this AGREEMENT and continue indefinitely or as otherwise provided by this AGREEMENT.

ARTICLE XIX – ENTIRE AGREEMENT

This AGREEMENT, including all documents and Appendices included by reference herein, constitutes the entire agreement between the PARTIES and supersedes all prior agreements, whether oral or written, covering the same subject matter. This AGREEMENT may not be modified or amended except in writing, mutually agreed upon and accepted by both PARTIES to this AGREEMENT.

The cost of this AGREEMENT including all reimbursable expenses as described in the FEES AND SCHEDULE, **shall not exceed:**

One hundred and ninety six thousand, two hundred and eighty seven dollars

$ 196,287, unless otherwise approved by the CITY through an official AMENDMENT agreed and executed by CITY and ENGINEER.

IN WITNESS THEREOF, the CITY and ENGINEER have executed this AGREEMENT, the EFFECTIVE DATE of which is indicated on page 1 of this AGREEMENT.

CITY OF BENTONVILLE	**CEI ENGINEERING ASSOCIATES, INC.**
CITY	ENGINEER
	[redacted]
BY	BY
MAYOR	**Principal/VP of Operations**
TITLE	TITLE
	6/9/2021
DATE SIGNED	DATE SIGNED

APPENDICES

APPENDIX A	PROJECT DESCRIPTION
APPENDIX B	SCOPE OF SERVICES
APPENDIX C	JUSTIFICATION OF FEES AND SERVICES, KEY MILESTONES, AND DURATIONS FOR MAJOR TASKS

APPENDIX A
PROJECT DESCRIPTION

PROJECT DESCRIPTION

This project shall include professional services associated with the design of a drainage collection system generally beginning at the intersection of SW 2nd St and SW D St, heading East for generally 350 feet, then heading south on SW C St. for generally 660 feet until the intersection of SW C St and SW 3rd St, then heading East for generally 350 feet until the intersection of SW B St. and SW 3rd St, then heading North on SW B St for generally 250 feet. This project also has a secondary piece that includes the alleyway that is generally 350 feet long between SW C St. and SW B St. This project will include typical drainage improvements to improve the quality of drainage runoff in the area as necessary.

APPENDIX B
SCOPE OF SERVICES

SERVICES BY THE CITY

- Furnish required information and approvals and perform responsibilities and activities in a timely manner to facilitate orderly progress of the work.
- Provide criteria and information as to the requirements for the PROJECT, including design objectives and constraints, right-of-way, capacity and performance requirements, and any budgetary limitations.
- Furnish copies of design and construction standards that the CITY will require to be included in the drawings and specifications.
- Assist the ENGINEER by placing at their disposal all available information pertinent to the PROJECT, including previous reports and other data relative to design or construction of the PROJECT.
- Arrange for access to public and private property as required for the PROJECT.
- Obtain the necessary lands, easements and rights-of-way for the PROJECT.
- Reimburse all plan review, advertising costs, permits and approvals in connection with the PROJECT.
- Pay the ENGINEER is accordance with the terms of the AGREEMENT.

If the CITY observes or otherwise becomes aware of any fault or defect in the PROJECT, the CITY shall give prompt written notice thereof to the ENGINEER.

SERVICES BY THE ENGINEER

- Meet all requirements of the AGREEMENT including any AMENDMENTS.
- Produce all documents and services needed for the PROJECT, including but not limited to:

  Topographical surveys, Right-of-Way Surveys, Utility Surveys and Coordination, Traffic Study, Geotechnical Investigations, Environmental Surveys, Permitting, Major Drainage Study, Conceptual Design Phase (30%), Preliminary Design Phase (60%), Final Design Phase (90%), Public Meetings, Bidding Services, Construction Support Services, Project Management Services, Project Closeout.
- Project Management services for the entire life of the project that align with the Project Management Institute Project Management Book of Knowledge Latest Edition.
- All Design and Construction shall conform to Federal, State and Local regulations.
- Coordinate PROJECT with Franchise Utility Companies to assure adequate space for all facilities and timely relocations.
- Coordinate and Furnish approvals and permits from all Regulatory Agencies having jurisdiction over the PROJECT.
- Provide all services relevant to City of Bentonville Plan Review procedures.
- Create and provide all documents for property acquisitions and assist with any layout or staking required.
- Coordinate and facilitate meetings with CITY and Agencies for plan review, project coordination and right-of-way.
- Subcontracting of services by the ENGINEER shall have prior approval of the CITY.

SUPPLEMENTAL SERVICES BY THE ENGINEER

- **Title 1 Scope of Services:**
  - **Roadway Design and Plans**
    - CEI shall perform design services including ROW Permitting, ADEQ Permitting, Utility Coordination with Franchise Utilities and City of Bentonville Utilities, Public Input Meetings and Bidding Administration up to, and including, Bid Tabulation and Letter of Recommendation of the apparent low bidder. It will also include project management services related to the above items.
    - Services do not include roadway improvements.
  - **Survey**
    - **Topographic Survey**
      - CEI shall perform a Topographical Survey of said property, consisting of 1' contours derived from a digital terrain model and shown in accordance with the National Mapping Standards. Topographic survey will include all above-ground physicals and underground utilities. Location of underground utilities will be based on evidence found during the survey, markings by One Call service, and utility plans provided by Client.
    - **Boundary Survey**
      - Boundary Survey of said property shall be done in accordance with ""Arkansas Standards of Practice Property Boundary Surveys and Plats." and supervised by a licensed surveyor. Boundary monuments will be identified as found in the field. Missing monuments will be reset as needed. If available, the latest title commitment will be utilized to show all affecting easements and setback lines. If one is not available, a 50-year Easement and Current Deed search will be ordered and billed as a reimbursable.
      - Boundary determinations often disclose unseen or unknown conflicts between record documents and/or the location of physical improvements. Thus, in the process of conducting the research, field work, and/or analysis, if the surveyor identifies a possible boundary or title conflict, a sketch showing the revealed conditions will be prepared and a meeting with the client and affected neighbors (if desired) will be scheduled. Following the meeting, if the client wishes to engage the surveyor to assist in pursuing resolution of the problem as a consultant, expert and/or formal or informal mediator, the contract will be modified accordingly. Otherwise the client will be invoiced only for the time expended to that point, and work on the survey will be suspended until or unless the client is able to resolve the issue by agreement or litigation, at which time a subsequent contract may be executed to complete the survey pursuant to that agreement or litigation.
    - **Easement Documents**
      - CEI shall provide exhibit & description for the proposed easements. CEI will utilize the standard easement document provided by the city of Bentonville and insert the description and exhibit describing the location of the easements to allow for recording by the city of Bentonville. Any additional parcel easement exhibits and descriptions beyond what is stated in the justification of costs and fees exhibit will require an extra work authorization to be executed.
    - **Construction Staking**
      - CEI shall provide construction staking services for proposed storm drainage design only, along the 2000 LF route described in the project description, on an

as needed basis to be performed hourly per our schedule of charges as stated herein. CEI will provide construction horizontal and vertical control at every 1000 feet.

- **Reimbursables**
  - The scope of services listed above is intended as fee only and does not include reimbursable expenses such as application fees, reprographics, etc.
  - Reimbursables include but are not limited to a 50-Year easement and current deed search.

- **Title 2 Scope of Services:**
  - CEI shall perform construction support services and construction observation for the anticipated duration of the project as noted in the justification of fees. Services include pay application reviews, review and approval of construction submittals, review and approval of change orders, as-built drawings, project management, and final project close out.

APPENDIX C

SCHEDULE OF FEES AND SERVICES, KEY MILESTONES, AND DURATIONS FOR MAJOR TASKS

SCHEDULE OF FEES:

TITLE 1:

DESIGN LABOR COSTS: $79,280

SURVEY: $33,500

REIMBURSABLES: $600

SUBTOTAL TTLE 1:$113,380

TITLE 2:

LABOR COSTS: $76,020

SURVEY: $6,700

REIMBURSABLES: $187

SUBTOTAL TITLE 2: $82,907

TOTAL TITLE 1 & TITLE 2: $196,287

Attachment C- Justification of Costs and Fees
June 9th , 2021
SW 3rd and C Laterals (MUNIS# 21EN0022)
CEI Engineering Inc.
Summary

DRAINAGE DESIGN & PLANS - TITLE 1

MANHOURS												
TASK	PC	DM	PM	APM	PE	SPE	DEE	DE	SD	CT	AA	TOTAL
Design Criteria												
30% Conceptual Design Phase												
Prepare Title Sheet								1		3		4
Prepare Plan and Profile Sheets								6		16		22
Initial Hydraulics and Box Culvert Sizing					4			8				12
Prepare Preliminary Cost Estimate					1			3		4		8
Exhibits/KMZ										4		4
In-House Quality Control Review and Revisions	2	2	6		2			2		6		20
City Review, Submittal Meetings, and Coordination		2	4									6
Coordination with Utilities			2					4				6
Coord. W/ Subcontractors (Survey,Geotech,Env) & Other Firms	1	4	12									17
City Coordination	1	2	4									7
60% Design Phase												
Update Plans Per City Comments								2		4		6
Prepare Title Sheet								1		2		3
Prepare Special Details								1		2		3
Prepare Survey Data Sheets										4		4
Prepare Temporary Erosion Control Detail Sheets								5	1	2		8
Prepare Demo Plans								1		2		3
Prepare Plan and Profile Sheets								12		6		18
Prepare Drainage Report (1 Hydraulic study)								40				40
Prepare Drainage Cross Sections								8				8
Prepare Public Involvement Exhibits								8				8
Public Involvement Meeting		3	3									6
Review Public Comments and Develop Responses		2	2									4
Develop Public Meeting Summary											3	3
Prepare Cost Estimate								1		4		5
In-House Quality Control Review and Revisions	2	4	10		12			4		6		38
Submit 60% Plans for Review		1	3									4
City Review, Submittal Meetings, and Coordination	2	2	4									8
Disposition of Comments		1	2									3
Coordination with Utilities		1	8					4				13
Coord. W/ Subcontractors (Survey,Geotech,Env) & Other Firms	1	2	10									13
90% Design Phase												
Revisions to Plans from 60% Comments					2			4		8		14
Calculate Quantities			1							2		3
Prepare Specifications		1	2		18			6		4		31
Prepare SWPPP			2		6			4				12
Prepare Cost Estimate		1	1							1		3
In-House Quality Control Review and Revisions	2	2	8					4		6		22
Submit 90% Plans for Review		2	4		2							8
Disposition of Comments		2	2									4
City Review, Submittal Meetings, and Coordination		2	8									10
Coordination w/ Utilities		1	4					4				9
Coord. W/ Subcontractors (Survey,Geotech,Env) & Other Firms	1	2	10									13
100% Design Phase												
Revisions to Plans and SP's from 90% Comments					2					4		6
Prepare Cost Estimate			1		1					1		3
In-House Quality Control Review and Revisions	2	2	2					4		8		18
Submit 100% Plans for Review		2	2								1	5
City Review, Submittal Meetings, and Coordination		2	8									10
Coordination with Utilities			4					3				7
Bid Advertisement and Bidding			6		6						4	16
Bid Addendums	1	2	6					4			2	15
Pre Bid Meeting	1	3	3									7
Bid Opening	1	2	2									5
Weekly Coord. with City through Project Duration/ Status Updates		6	12									18
Coord. W/ Subcontractors (Survey,Geotech,Env) & Other Firms	1	2	10									13
TOTAL MH - DRAINAGE DESIGN & PLANS - TITLE 1	18	60	168	0	56	0	0	144	1	99	10	556

DESIGN LABOR COSTS			
Category - Description	Rate	MH	Amount
PC - Principal-in-Charge	$225.00	18	$4,050

Attachment C- Justification of Costs and Fees
June 9th , 2021
SW 3rd and C Laterals (MUNIS# 21EN0022)
CEI Engineering Inc.
Summary

DRAINAGE DESIGN & PLANS - TITLE 1

MANHOURS												
TASK	PC	DM	PM	APM	PE	SPE	DEE	DE	SD	CT	AA	TOTAL
DM - Department Manager										$205.00	60	$12,300
PM - Project Manager										$175.00	168	$29,400
APM - Assistant Project Manager										$145.00	0	$0
PE - Project Engineer										$150.00	56	$8,400
SPE - Senior Project Engineer										$175.00	0	$0
DEE - Design Engineer										$150.00	0	$0
DE - Designer										$110.00	144	$15,840
SD - Senior Designer										$125.00	1	$125
CT - Cadd Technician										$85.00	99	$8,415
AA - Admin										$75.00	10	$750
											SUBTOTAL DESIGN LABOR COSTS TITLE 1	**$79,280**

ITEM	Quantity	Unit	Rate	Amount
SUBCONSULTANTS TITLE 1				
SURVEY SERVICES				
Topographic Survey - North Lateral	1	LS	$6,000.00	$6,000
Topographic Survey - South Lateral	1	LS	$3,500.00	$3,500
Boundary Survey - North Lateral	1	LS	$4,000.00	$4,000
Boundary Survey - South Lateral	1	LS	$3,800.00	$3,800
Easement Documents (12 Parcels)	12	EACH	$850.00	$10,200
Reimbursables (Title work/ 12 Parcels)	1	LS	$6,000.00	$6,000
			SUBTOTAL SUBCONSULTANTS TITLE 1	**$33,500**

REIMBURSABLES				
ITEM	Quantity	Unit	Rate	Amount
Printing (Full size B&W)	8	each	$50.00	$400
ADEQ Submittal Fee	1	LS	$200.00	$200
			SUBTOTAL REIMBURSABLES	$600
			SUBTOTAL TITLE 1	**$113,380**

Attachment C- Justification of Costs and Fees
June 9th , 2021
SW 3rd and C Laterals (MUNIS# 21EN0022)

DRAINAGE DESIGN & PLANS - TITLE 1

BASIS OF ESTIMATE	
Description	Feet
Drainage Improvements	1937.00
Description	

Attachment C- Justification of Costs and Fees
June 9th , 2021
SW 3rd and C Laterals (MUNIS# 21EN0022)

Title II

MANHOURS												
TASK	PC	DM	PM	APM	PE	SPE	DEE	DE	SD	CT	CO	TOTAL
General Coordination (City, Contractor, Utility, etc)	4	12	40									56
Pay Application Reviews	3	3	6					12			12	36
Answer Questions During Construction		16	60									76
Field Visit		8	24									32
Half-Time Observation (3 months @ 5 Hr/day)											300	300
Review/Approve Construction Submittals & Change Orders	2	4	10		8			30				54
As-Built Drawings		2	6					20				28
TOTAL MH - Title II	9	45	146	0	8	0	0	62	0	0	312	582

LABOR COSTS			
Category - Description	Rate	MH	Amount
PC - Principal-in-Charge	$225.00	9	$2,025
DM - Department Manager	$205.00	45	$9,225
PM - Project Manager	$175.00	146	$25,550
APM - Assistant Project Manager	$145.00	0	$0
PE - Project Engineer	$150.00	8	$1,200
SPE - Senior Project Engineer	$175.00	0	$0
DEE - Design Engineer	$150.00	0	$0
DE - Designer	$110.00	62	$6,820
SD - Senior Designer	$125.00	0	$0
CT - Cadd Technician	$85.00	0	$0
CO - Construction Observer	$100.00	312	$31,200
		Subtotal Labor Costs	**$76,020**

ITEM	Quantity	Unit	Rate	Amount
SUBCONSULTANTS TITLE II				
SURVEY SERVICES				
Construction Staking (Hourly, as needed, per Schedule of Charges as stated herein, not to exceed)	1	LS	$6,700.00	$6,700
			SUBTOTAL SUBCONSULTANTS TITLE II	**$6,700**

REIMBURSABLES				
ITEM	Quantity	Unit	Rate	Amount
Printing (Full size B&W)	1	each	$20.00	$20
Mileage (1 Trip/Bus. Day for 3 months at 4.8 miles)	288	mile	$0.58	$167
			SUBTOTAL REIMBURSABLES	$187
			SUBTOTAL TITLE II	**$82,907**

ANTICIPATED PROJECT DURATIONS:

The Engineer will commence services upon execution of this Contract and Notice to Proceed has been given. Services shall cease after close out of the Consultant's work. The tentative anticipated durations for this Contract are as follows:

City review time: **2 weeks** from receipt of each Deliverable

Topographic Survey- Duration**: 3 weeks**

Boundary Survey- Duration: **6 weeks** (Can be completed concurrently with Topo Survey)

30% Submittal- Duration: **3 weeks**

60% Submittal - Duration: **6 weeks**

90% Submittal - Duration: **6 weeks**

100% Submittal - Duration: **4 weeks**

Easement Documents- Duration: **3 weeks** (Can be completed concurrently with 100% Submittal)

Bidding/Advertising - Duration: **6 weeks**

Construction - Duration: **3 months**

Project Close Out – Duration: **4 weeks** (Can be completed concurrently with Construction)

RESOLUTION NO. _____

A RESOLUTION AUTHORIZING THE MAYOR TO ENTER INTO AN AGREEMENT WITH CEI ENGINEERING ASSOCIATES, FOR ENGINEERING AND PROJECT SERVICES FOR SW 3RD AND C LATERALS.

NOW, THEREFORE, BE IT RESOLVED BY THE CITY COUNCIL FOR THE CITY OF BENTONVILLE, ARKANSAS.

Section 1: That the Mayor be and is hereby authorized to enter into an agreement with CEI Engineering Associates for engineering and project services for SW 3rd and C Laterals in an amount of $196,287.00 as set forth in the Professional Services Agreement attached hereto as Exhibit "A".

Section 2: This resolution shall be in full force and effect from and after the date of its passage.

PASSED and APPROVED this _____ day of _____, 2021.

APPROVED:

_____
MAYOR

ATTEST:

_____
CITY CLERK

Agenda Item Form

Date of City Council Meeting	**6/22/2021**
Department	**Engineering**
Submitted by	**Dan Weese**
Phone	**(479) 254-2024**

Item Type: (*Check Applicable Item Type*)

☐ Budget Adjustment	☐ Change Order	☐ Informational	☐ Ordinance	☑ Resolution	☐ Bid Award

Recommendation/Suggested Action *(Enter recommendation in space below)*:

Resolution allowing the Mayor to enter into a professional service agreement with CEI Engineering Associates for engineering and project services for SE C Laterals. The cost of this agreement will be $171,852.00. This Firm was selected following the City's standard RFQ solicitation and selection process for the procurement of professional services in accordance with state law.

Estimated Cost	**$171,852.00**
Is this Item Budgeted?	☐ Yes ☑ No

If no, please explain how item will be funded *(briefly explain in space below)* **:**

This project is part of the Bond program.

Memorandum

To: Mayor and City Council

From: Dan Weese, City Engineer

Date: Thursday, June 10, 2021

Re: Professional Services Agreement for SE C Laterals

Project Description: SE C Laterals (Drainage Project, MUNIS # 21EN0017)

Extend the collection system and curb and gutter.

CEI Engineering Associates has been selected to perform all related engineering services needed for this project. This Professional Services Agreement (PSA) amount for this project is $171,852.00.

Staff requests approval of a resolution allowing the Mayor to enter into a PSA with CEI Engineering Associates for this project.

Please contact me with any questions or concerns regarding this PSA or the project. My telephone number is (479) 254-2024 or I can be reached via email at dweese@bentonvillear.com

PROFESSIONAL SERVICES AGREEMENT

PROJECT NAME: **SE C LATERALS (MUNIS# 21EN0017)** ("PROJECT")

THIS AGREEMENT ("AGREEMENT") is made in Benton County, Arkansas, by and between the City of Bentonville, Arkansas, hereinafter referred to as "CITY", and CEI ENGINEERING ASSOCIATES, INC., hereinafter referred to as "ENGINEER" (collectively, the "PARTIES").

The PARTIES have caused this AGREEMENT to be effective this ____ day of _____, 20 ____ ("EFFECTIVE DATE").

RECITALS:

A. WHEREAS, the CITY has a need to perform capital improvement projects for the City of Bentonville, Arkansas; and

B. WHEREAS, The CITY has selected the ENGINEER and negotiated this AGREEMENT using the procedures as set forth in Ark. Code Ann. § 19-11-800; and

C. WHEREAS, the CITY wishes to contract for Professional Services; and

D. WHEREAS, The ENGINEER has the skill, experience, ability, background, certifications and knowledge to provide these services; and

E. WHEREAS, The ENGINEER wishes to perform such professional services under this AGREEMENT with the CITY.

NOW, THEREFORE, in consideration of the terms in this AGREEMENT, the CITY and ENGINEER agree to the following:

ARTICLE I - PROJECT DESCRIPTION

The PROJECT shall be as described in APPENDIX A. "Project Description", attached hereto and incorporated herein by reference.

ARTICLE II - SCOPE OF SERVICE

Upon issuance of a written Notice to Proceed by the CITY, ENGINEER agrees to provide the CITY the necessary professional services related to the PROJECT, as set forth in APPENDIX B, "Scope of Services" ("SCOPE"), attached hereto and incorporated herein by reference.

ARTICLE III - STANDARD OF CARE

ENGINEER shall at all times material hereto adhere to the generally accepted standard of care typically exhibited by similarly situated professionals performing similar scope(s) of service on projects of like size, scope, nature, cost, schedule, and complexity, at the same time and in the same general regional locale ("Standard of Care").

ARTICLE IV - ADDITIONAL SERVICES

A. Any service outside of the work described herein or included by reference hereto must be pre-approved by the CITY and executed as an AMENDMENT to this AGREEMENT by the Parties prior to any such work being completed; any such AMENDMENT shall be in accordance with the CITY'S purchasing laws and guidelines and may require approval from the Bentonville City Council.

B. ENGINEER shall make no claims for additional services or changes in the services until an AMENDMENT has been fully executed by the Parties.

ARTICLE V - SCHEDULE OF FEES, SERVICES AND PAYMENT

A. The term of this AGREEMENT shall commence on the EFFECTIVE DATE and shall proceed in accordance with APPENDIX C, "Schedule of Fees and Services, Key Milestones, and Durations for Major Tasks", attached hereto and incorporated herein by reference.

B. The cost of this AGREEMENT shall be in accordance with APPENDIX C.

C. CITY agrees to pay ENGINEER for all services authorized by inclusion in this AGREEMENT which have been properly performed by ENGINEER in accordance with this AGREEMENT.

D. All fees paid to ENGINEER shall be based on invoices submitted by ENGINEER for work performed under this AGREEMENT, less any previous payments. ENGINEER shall submit invoices for services related to this AGREEMENT on a monthly basis.

E. CITY reserves the right to delay, without penalty, any partial payment when, in the opinion of the CITY, ENGINEER has not made satisfactory progress on the Project based on the SCOPE. If CITY objects to any portion of an invoice, the CITY shall notify ENGINEER and shall pay all other portions of the invoice which are not in dispute. In the event of dispute, CITY and ENGINEER shall immediately make every effort to settle the disputed portion of the invoice.

F. In the event that the CITY becomes credibly informed that any representations of ENGINEER provided in its invoicing are wholly or partially inaccurate, CITY may withhold payment of sums then, or in the future, otherwise due to ENGINEER until the inaccuracy and the cause thereof is corrected to the CITY's reasonable satisfaction.

G. If the CITY fails to make any payment, not in dispute, due to ENGINEER within thirty (30) days after receipt of an invoice, then the amount due to the ENGINEER will increase at the lesser of one percent (1 %) per month or the maximum amount allowed by law after the 30th day. In addition, ENGINEER may, after giving seven (7) days' written notice to CITY, suspend its services and any deliverables until ENGINEER has been paid in full for all amounts outstanding more than thirty (30) days.

ARTICLE VI - INSURANCE

A. ENGINEER shall during the term hereof maintain in full force and effect the following insurance:

1. A comprehensive general liability policy of insurance for bodily injury, death and property damage insuring against all claims, demands or actions relating to the ENGINEER's performance of services pursuant to this AGREEMENT with a combined single limit of not less than $1,000,000.00 per occurrence and $2,000,000 in the aggregate for injury to persons (including death), and for property damage;
2. A policy of automobile liability insurance covering any vehicles owned and/or operated by ENGINEER, its officers, agents, and employees, and used in the performance of this AGREEMENT with policy limits of not less than $1,000,000.00 combined single limit and aggregate for bodily injury and property damage;
3. Statutory Worker's Compensation Insurance at the statutory limits and Employers Liability covering all of ENGINEER's employees involved in the provision of services under this AGREEMENT with policy limit of not less than $1,000,000.00; and
4. Professional Liability/Errors and Omissions coverage covering negligent acts, errors and omissions in the performance of professional services with policy limit of not less than $1,000,000.00.

B. All insurance and certificate(s) of insurance shall contain the following provisions:

1. Include CITY as additional insured as to all applicable coverage with the exception of Workers Compensation Insurance and Professional Liability/Errors and Omissions coverage; and
2. provide for at least thirty (30) days prior written notice to CITY for cancellation or non-renewal of the insurance;
3. provide for a waiver of subrogation against CITY for injuries, including death, property damage, or any other loss to the extent the same is covered by the proceeds of insurance, except for Professional Liability/Errors and Omissions coverage.

C. ENGINEER shall provide 30 day written notice to CITY of any material change of or to the insurance required herein.

D. All insurance companies providing the required insurance shall be authorized to transact business in Arkansas and rated at least "A" by AM Best or other equivalent rating service. A certificate of insurance evidencing the required insurance and all endorsements required by this Agreement shall be submitted prior to commencement of services.

E. In the event that additional or greater insurance requirements are warranted, these requirements shall be included as an Appendix, which will be attached hereto and incorporated by reference.

ARTICLE VII - RIGHT OF ACCESS

A. CITY will obtain and/or furnish right-of-access for ENGINEER to perform any required studies, surveys, tests or other necessary investigations in relation to the PROJECT.

B. ENGINEER will take reasonable precautions to minimize damage to the personal or real property in the performance of such surveys, tests, studies and investigations.

C. CITY recognizes that ENGINEER's operations and use of equipment may unavoidably alter existing conditions or affect the environment at the PROJECT site. The cost of repairing such damage shall be the responsibility of ENGINEER, at no additional cost to the CITY. In the event that ENGINEER fails to correct such damages, CITY is entitled to utilize CITY forces or other labor to repair the damage; any costs incurred by CITY for such work shall be deducted from the monies due to ENGINEER.

ARTICLE VIII - RECORDS AND RETENTION

A. All surveys, studies, proposals, applications, drawings, plans, specifications and other documents, including those in electronic form, prepared by ENGINEER and its ENGINEERs, subcontractors, agents, representatives, and/or employees in connection with this AGREEMENT ("PROJECT DOCUMENTS") are intended for the use and benefit of CITY. ENGINEER and its ENGINEERs, subcontractors, agents, representatives, and/or employees shall be deemed the authors of their respective part of the PROJECT DOCUMENTS. Notwithstanding anything to the contrary, CITY shall own, have, and retain all rights, title and interest in and to all PROJECT DOCUMENTS, whether in draft form or final form, which are produced at CITY's request or otherwise produced from ENGINEER's performance of the work described herein for CITY. The CITY's ownership of PROJECT DOCUMENTS shall not apply to ENGINEER's proprietary standard details that were developed by the ENGINEER prior to the commencement of this PROJECT.

B. CITY shall have full authority to reuse, reproduce, publish, disclose and distribute PROJECT DOCUMENTS, as needed, according to Arkansas State Law.

C. ENGINEER shall, upon completion of the services and full payment for the ENGINEER'S services by the CITY, or earlier termination and appropriate compensation as provided by this AGREEMENT, provide the CITY with all PROJECT DOCUMENTS prepared by ENGINEER pursuant to this AGREEMENT in formats requested by the CITY.

D. All instruments of service (including plans, specifications, drawings, reports, designs, computations, computer programs, estimates, surveys, other data or work items, etc.) prepared under this AGREEMENT shall be submitted for approval to the CITY. All instruments of service shall be professionally sealed in accordance to applicable laws or at CITY's request.

E. Acceptance and approval of the PROJECT DOCUMENTS by the CITY shall not constitute nor be deemed a release of the responsibility and liability of ENGINEER, its employees, associates, agents and ENGINEERs for the accuracy or competency of their designs, working drawings and specifications, or other documents and work; nor shall such approval be deemed to be an assumption of such responsibility by the CITY for any defect in the designs, working drawings and specifications, or other documents prepared by ENGINEER, its employees, contractor, agents and ENGINEERs.

F. ENGINEER will retain the PROJECT DOCUMENTS for a period of three years following project completion. During this three year period, any requests for document recovery and reproduction will be assessed a fee in accordance with ENGINEER's FEES.

ARTICLE IX - SAFETY

A. CITY agrees to inform ENGINEER of any applicable site safety procedures and regulations known to CITY as well as any special safety concerns or dangerous conditions at the site of which the CITY is aware, which ENGINEER shall communicate to its employees. ENGINEER and its employees shall adhere to such procedures and regulations once notice has been given by the CITY.

B. Unless specifically provided in the SCOPE, ENGINEER shall not have any responsibility for overall job safety at the site. If in the ENGINEER's opinion, its field personnel are unable to access required locations or perform required services in conformance with applicable safety standards, ENGINEER may immediately suspend performance until such safety standards can be attained.

C. ENGINEER agrees to indemnify and hold harmless the CITY for any safety conditions that may arise out of ENGINEER's performance of this AGREEMENT.

ARTICLE X - TERMINATION

A. CITY may suspend or terminate this AGREEMENT for cause or without cause at any time by giving written notice to ENGINEER. In the event suspension or termination is without cause, payment to ENGINEER, in accordance with the terms of this AGREEMENT, will be made on the basis of services reasonably determined by the CITY to be satisfactorily performed to the date of suspension or termination. Such payment will be due upon delivery of all instruments of service to CITY.

B. Should the CITY require a modification of this AGREEMENT with the ENGINEER, and in the event the CITY and ENGINEER fail to agree upon a modification to this AGREEMENT, the CITY shall have the option of terminating this AGREEMENT and the ENGINEER's services hereunder at no additional cost other than the payment to ENGINEER, in accordance with the terms of this AGREEMENT, for the services reasonably determined by the CITY to be properly performed by ENGINEER prior to such termination date.

C. If, for whatever adequate funding is not made available by CITY to support or justify continuation of the level of services to be provided by ENGINEER under this AGREEMENT, CITY may terminate or reduce the amount of services to be provided by ENGINEER under this AGREEMENT. In such event, CITY will notify ENGINEER in writing at least thirty (30) days in advance of such termination or reduction of services for lack of funds.

D. In no event shall the CITY pay to ENGINEER fees for termination outside of payment for services reasonably determined by the City to be properly performed prior to termination.

ARTICLE XI - INDEMNIFICATION

A. For purposes of this AGREEMENT, ENGINEER agrees to indemnify, hold harmless the CITY, its officers and employees from any loss, damage, liability or expense, of any nature whatsoever to the extent caused by the negligence, willful misconduct, or other actionable fault of ENGINEER, its affiliates, subsidiaries, employees, agents, assignees, and subcontractors and their respective employees and agents. ENGINEER is not required hereunder to defend the CITY, its officers, appointees, employees, or agents from assertions that they were negligent, nor to indemnify and hold them harmless from liability based on the CITY's negligence

B. Nothing contained herein shall waive any governmental immunity CITY may be entitled to by law.

C. This provision shall survive the termination of this AGREEMENT.

ARTICLE XII - CONTINGENCY CLAUSE

A. The CITY may add a contingency amount to the contract to cover additional services as described in APPENDIX B. Any use of such contingency funds for additional services shall be executed as an AMENDMENT to this AGREEMENT.

B. The Contingency shall in no manner substitute for an official AMENDMENT.

ARTICLE XIII - RELATIONSHIP OF THE PARTIES

It is understood and agreed by and between the parties that the ENGINEER, in satisfying the conditions of this AGREEMENT, is acting independently, and that the CITY assumes no responsibility or liabilities to any third party in connection with ENGINEER's actions. All services to be performed by the ENGINEER pursuant to this AGREEMENT shall be in the capacity of an Independent Contractor, and not as an agent or employee of CITY. The ENGINEER shall supervise the performance of its services and shall be entitled to control the manner and means by which its services are to be performed, subject to the terms of this AGREEMENT. There is no intended third party beneficiary to the AGREEMENT and nothing contained herein shall create a contractual relationship with, or any rights in favor of, any third party.

ARTICLE XIV - DISPUTE RESOLUTION

A. CITY and ENGINEER agree that disputes relative to the services will first be addressed by negotiations between the Parties. If direct negotiations fail to resolve the dispute, the Party initiating the claim that is the basis for dispute may take such steps as it deems necessary to protect its interests; provided, however, that notwithstanding any such dispute, ENGINEER will proceed with the services as per this AGREEMENT as if no dispute existed, and CITY will continue to make payment for ENGINEER's completed services; and provided further that no dispute will be submitted to arbitration without both Parties' express written consent.

ARTICLE XV - OPINIONS OF PROBABLE COST

A. Since the ENGINEER has no control over the cost of labor, materials, equipment or services furnished by others, or over methods of determining prices, or over competitive bidding or market conditions, the ENGINEER's estimates of PROJECT costs and construction costs provided for herein are to be made on the basis of the ENGINEER's experience and qualifications and represent the ENGINEER's judgement in accordance with the "Standard of Care". The ENGINEER cannot and does not guarantee that proposals, bids or actual PROJECT or construction costs will not vary from estimates prepared by the ENGINEER.

B. The CITY understands that the construction cost estimates developed by the ENGINEER do not establish a limit for construction contract amount. If the actual amount of the low construction bid exceeds the construction budget established by the CITY, the ENGINEER will not be required to re-design the PROJECT or any part thereof without additional compensation.

ARTICLE XVI - APPLICABLE LAWS

ENGINEER shall comply with all Federal, State, Local laws, ordinances, resolutions, specifications, regulations and all other laws or regulations relating or applicable to service to be performed under this AGREEMENT. Interpretation of this AGREEMENT and disputes arising out of or related to this AGREEMENT will be subject to and governed by the laws of the State of Arkansas. Jurisdiction and venue for any suit arising out of or related to this AGREEMENT will be in the District Court of Benton County, Arkansas,

ARTICLE XVII - PRECEDENCE

This AGREEMENT shall take precedence over any inconsistent of contradictory provisions contained in any proposal, contract, purchase order, requisition, notice to proceed, or any other like document regarding the PROJECT or ENGINEER's services.

ARTICLE XVIII - SEVERABILITY

A. In the event that one or more provisions contained herein shall, for any reason, be deemed invalid, illegal, void or unenforceable, in whole or in part, the remaining provisions hereof shall remain in full force and effect.

B. In the event that any provision hereof is in conflict with any statutory provision of the State of Arkansas, said provision, which may be in conflict therewith, shall be deemed inoperative, null and void insofar as it may be in conflict therewith, and shall be deemed modified to conform to such statutory provisions; provided, however, that the remaining provisions of this AGREEMENT will be unaffected and will continue to be valid and enforceable.

ARTICLE XIX - SURVIVAL OF OBLIGATIONS

The obligations of the Parties contained in this AGREEMENT, which by their nature survive after the term of the AGREEMENT, shall survive the termination or expiration of this AGREEMENT and continue indefinitely or as otherwise provided by this AGREEMENT.

ARTICLE XIX – ENTIRE AGREEMENT

This AGREEMENT, including all documents and Appendices included by reference herein, constitutes the entire agreement between the PARTIES and supersedes all prior agreements, whether oral or written, covering the same subject matter. This AGREEMENT may not be modified or amended except in writing, mutually agreed upon and accepted by both PARTIES to this AGREEMENT.

The cost of this AGREEMENT including all reimbursable expenses as described in the FEES AND SCHEDULE, **shall not exceed:**

One hundred and seventy one thousand, eight hundred and fifty two dollars

$ 171,852 , unless otherwise approved by the CITY through an official AMENDMENT agreed and executed by CITY and ENGINEER.

IN WITNESS THEREOF, the CITY and ENGINEER have executed this AGREEMENT, the EFFECTIVE DATE of which is indicated on page 1 of this AGREEMENT.

CITY OF BENTONVILLE	**CEI ENGINEERING ASSOCIATES, INC.**
CITY	ENGINEER
	[redacted]
BY	BY
MAYOR	**Principal/VP of Operations**
TITLE	TITLE
	6/9/2021
DATE SIGNED	DATE SIGNED

APPENDICES

APPENDIX A	PROJECT DESCRIPTION
APPENDIX B	SCOPE OF SERVICES
APPENDIX C	JUSTIFICATION OF FEES AND SERVICES, KEY MILESTONES, AND DURATIONS FOR MAJOR TASKS

APPENDIX A

PROJECT DESCRIPTION

This project shall include professional services associated with the design of a drainage collection system generally beginning on SE B St, 200 feet North of SE 6th St, heading North and continuing East through the alleyway between SE B St and SE C St for 215 feet, then heading North on SE C St for 825 feet until the intersection of SE C St and SE 3rd St. This project will include typical drainage improvements to improve the quality of drainage runoff in the area as necessary.

APPENDIX B

SCOPE OF SERVICES

SERVICES BY THE CITY

- Furnish required information and approvals and perform responsibilities and activities in a timely manner to facilitate orderly progress of the work.
- Provide criteria and information as to the requirements for the PROJECT, including design objectives and constraints, right-of-way, capacity and performance requirements, and any budgetary limitations.
- Furnish copies of design and construction standards that the CITY will require to be included in the drawings and specifications.
- Assist the ENGINEER by placing at their disposal all available information pertinent to the PROJECT, including previous reports and other data relative to design or construction of the PROJECT.
- Arrange for access to public and private property as required for the PROJECT.
- Obtain the necessary lands, easements and rights-of-way for the PROJECT.
- Reimburse all plan review, advertising costs, permits and approvals in connection with the PROJECT.
- Pay the ENGINEER is accordance with the terms of the AGREEMENT.

If the CITY observes or otherwise becomes aware of any fault or defect in the PROJECT, the CITY shall give prompt written notice thereof to the ENGINEER.

SERVICES BY THE ENGINEER

- Meet all requirements of the AGREEMENT including any AMENDMENTS.
- Produce all documents and services needed for the PROJECT, including but not limited to:

  Topographical surveys, Right-of-Way Surveys, Utility Surveys and Coordination, Traffic Study, Geotechnical Investigations, Environmental Surveys, Permitting, Major Drainage Study, Conceptual Design Phase (30%), Preliminary Design Phase (60%), Final Design Phase (90%), Public Meetings, Bidding Services, Construction Support Services, Project Management Services, Project Closeout.
- Project Management services for the entire life of the project that align with the Project Management Institute Project Management Book of Knowledge Latest Edition.
- All Design and Construction shall conform to Federal, State and Local regulations.
- Coordinate PROJECT with Franchise Utility Companies to assure adequate space for all facilities and timely relocations.
- Coordinate and Furnish approvals and permits from all Regulatory Agencies having jurisdiction over the PROJECT.
- Provide all services relevant to City of Bentonville Plan Review procedures.
- Create and provide all documents for property acquisitions and assist with any layout or staking required.
- Coordinate and facilitate meetings with CITY and Agencies for plan review, project coordination and right-of-way.
- Subcontracting of services by the ENGINEER shall have prior approval of the CITY.

SUPPLEMENTAL SERVICES BY THE ENGINEER

- **Title 1 Scope of Services:**
  - **Roadway Design and Plans**
    - CEI shall perform design services including ROW Permitting, ADEQ Permitting, Utility Coordination with Franchise Utilities and City of Bentonville Utilities, Public Input Meetings and Bidding Administration up to, and including, Bid Tabulation and Letter of Recommendation of the apparent low bidder. It will also include project management services related to the above items.
    - Services do not include roadway improvements.
  - **Survey**
    - **Topographic Survey**
      - CEI shall perform a Topographical Survey of said property, consisting of 1' contours derived from a digital terrain model and shown in accordance with the National Mapping Standards. Topographic survey will include all above-ground physicals and underground utilities. Location of underground utilities will be based on evidence found during the survey, markings by One Call service, and utility plans provided by Client.
    - **Boundary Survey**
      - Boundary Survey of said property shall be done in accordance with ""Arkansas Standards of Practice Property Boundary Surveys and Plats." and supervised by a licensed surveyor. Boundary monuments will be identified as found in the field. Missing monuments will be reset as needed. If available, the latest title commitment will be utilized to show all affecting easements and setback lines. If one is not available, a 50-year Easement and Current Deed search will be ordered and billed as a reimbursable.
    - **Easement Documents (10 Parcels)**
      - CEI shall provide exhibit & description for the proposed easements. CEI will utilize the standard easement document provided by the city of Bentonville and insert the description and exhibit describing the location of the easements to allow for recording by the city of Bentonville. Typical fee for easement description and exhibit is $900. Fee below is based on 10 parcels. Any additional parcel easement exhibits, and descriptions will require an extra work authorization to be executed.
    - **Construction Staking**
      - CEI shall provide construction staking services for proposed storm drainage design only, along the 1200 LF route described in the project description, on an as needed basis to be performed hourly per our schedule of charges as stated herein. CEI will provide construction horizontal and vertical control at every 1000 feet.
    - **Reimbursables**
      - The scope of services listed above is intended as fee only and does not include reimbursable expenses such as application fees, reprographics, etc.
      - Reimbursables include but are not limited to a 50-Year easement and current deed search.
- **Title 2 Scope of Services:**
  - CEI shall perform construction support services and construction observation for the anticipated duration of the project as noted in the justification of fees. Services include pay application reviews, review and approval of construction submittals, review and approval of change orders, as-built drawings, project management, and final project close out.

APPENDIX C

SCHEDULE OF FEES AND SERVICES, KEY MILESTONES, AND DURATIONS FOR MAJOR TASKS

SCHEDULE OF FEES:

TITLE 1:

DESIGN LABOR COSTS: $66,735

SURVEY: $25,200

REIMBURSABLES: $600

SUBTOTAL TTLE 1:$92,535

TITLE 2:

LABOR COSTS: $76,020

SURVEY: $3200

REIMBURSABLES: $97

SUBTOTAL TITLE 2: $79,317

TOTAL TITLE 1 & TITLE 2: $171,852

Attachment C- Justification of Costs and Fees
June 9th, 2021
SE C Laterals (MUNIS# 21EN0017)
CEI Engineering Inc.
Summary

DRAINAGE DESIGN & PLANS - TITLE 1

MANHOURS												
TASK	PC	DM	PM	APM	PE	SPE	DEE	DE	SD	CT	AA	TOTAL
30% Conceptual Design Phase												
Prepare Title Sheet								1		4		5
Prepare Plan and Profile Sheets								8		18		26
Initial Hydraulics and Box Culvert Sizing					4			6				10
Prepare Preliminary Cost Estimate					1			3		4		8
Exhibits/KMZ										4		4
In-House Quality Control Review and Revisions	2	3	8		4			4		6		27
City Review, Submittal Meetings, and Coordination		2	6									8
Coordination with Utilities			2					4				6
Coord. W/ Subcontractors (Survey) & Other Firms	1	4	10									15
City Coordination	2	4	4									10
60% Design Phase												
Update Plans Per City Comments								4		6		10
Prepare Title Sheet								1		2		3
Prepare Special Details								1		2		3
Prepare Survey Data Sheets										4		4
Prepare Temporary Erosion Control Detail Sheets								4	2	4		10
Prepare Demo Plans								2		4		6
Prepare Plan and Profile Sheets								10		8		18
Prepare Drainage Report (1 Hydraulic study)								36				36
Prepare Drainage Cross Sections								8				8
Prepare Public Involvement Exhibits								10				10
Public Involvement Meeting		3	3									6
Review Public Comments and Develop Responses		2	2									4
Develop Public Meeting Summary											3	3
Prepare Cost Estimate								1		4		5
In-House Quality Control Review and Revisions	2	4	10		10			4		8		38
Submit 60% Plans for Review		1	4									5
City Review, Submittal Meetings, and Coordination	2	2	6									10
Disposition of Comments		1	2									3
Coordination with Utilities		2	6					4				12
Coord. W/ Subcontractors (Survey) & Other Firms	1	2	8									11
Prepare Specifications		2	4		16			4		4		30
Prepare SWPPP			2		6			4				12
100% Design Phase												
Revisions to Plans and SP's from 60% Comments					4					6		10
Prepare Cost Estimate			2		1					2		5
In-House Quality Control Review and Revisions	2	4	4					6		8		24
Submit 100% Plans for Review		2	2								1	5
City Review, Submittal Meetings, and Coordination		2	8									10
Coordination with Utilities			4					3				7
Bid Advertisement and Bidding			6		6						4	16
Bid Addendums	1	2	6					8			2	19
Pre Bid Meeting	1	3	3									7
Bid Opening	1	2	2									5
Coord. W/ Subcontractors (Survey) & Other Firms	1	2	6									9
TOTAL MH - DRAINAGE DESIGN & PLANS - TITLE 1	16	49	120	0	52	0	0	136	2	98	10	483

DESIGN LABOR COSTS			
Category - Description	Rate	MH	Amount
PC - Principal-in-Charge	$225 00	16	$3,600
DM - Department Manager	$205 00	49	$10,045
PM - Project Manager	$175 00	120	$21,000
APM - Assistant Project Manager	$145 00	0	$0
PE - Project Engineer	$150 00	52	$7,800
SPE - Senior Project Engineer	$175 00	0	$0
DEE - Design Engineer	$150 00	0	$0
DE - Designer	$110 00	136	$14,960
SD - Senior Designer	$125 00	2	$250
CT - Cadd Technician	$85 00	98	$8,330
AA - Admin	$75 00	10	$750

Attachment C- Justification of Costs and Fees
June 9th, 2021
SE C Laterals (MUNIS# 21EN0017)
CEI Engineering Inc.
Summary

DRAINAGE DESIGN & PLANS - TITLE 1

MANHOURS												
TASK	PC	DM	PM	APM	PE	SPE	DEE	DE	SD	CT	AA	TOTAL
											SUBTOTAL DESIGN LABOR COSTS TITLE 1	**$66,735**
ITEM									Quantity	Unit	Rate	Amount
SUBCONSULTANTS TITLE 1												
SURVEY SERVICES												
Topographic Survey									1	LS	$6,000.00	$6,000
Boundary Survey									1	LS	$5,700.00	$5,700
Easement Documents (10 Parcels)									10	EA	$850.00	$8,500
Reimbursables									1	LS	$5,000.00	$5,000
											SUBTOTAL SUBCONSULTANTS TITLE 1	**$25,200**
REIMBURSABLES												
ITEM									Quantity	Unit	Rate	Amount
Printing (Full size B&W)									8	each	$50.00	$400
ADEQ Submittal Fee									1	LS	$200.00	$200
											SUBTOTAL REIMBURSABLES	$600
											SUBTOTAL TITLE 1	**$92,535**

Attachment C- Justification of Costs and Fees
June 9th, 2021
SE C Laterals (MUNIS# 21EN0017)

DRAINAGE DESIGN & PLANS - TITLE 1

BASIS OF ESTIMATE	
Description	Feet
24" Drainage Improvements	1241.00
Total	1241.00
Description	

Attachment C- Justification of Costs and Fees
June 9th, 2021
SE C Laterals (MUNIS# 21EN0017)

Title II

MANHOURS

TASK	PC	DM	PM	APM	PE	SPE	DEE	DE	SD	CT	CO	TOTAL
General Coordination (City, Contractor, Utility, etc)	4	12	40									56
Pay Application Reviews	3	3	6					12			12	36
Answer Questions During Construction		16	60									76
Field Visit		8	24									32
Half-Time Observation (3 months @ 5 Hr/day)											300	300
Review/Approve Construction Submittals & Change Orders	2	4	10		8			30				54
As-Built Drawings		2	6					20				28
TOTAL MH - Title II	9	45	146	0	8	0	0	62	0	0	312	582

LABOR COSTS

Category - Description	Rate	MH	Amount
PC - Principal-in-Charge	$225 00	9	$2,025
DM - Department Manager	$205 00	45	$9,225
PM - Project Manager	$175 00	146	$25,550
APM - Assistant Project Manager	$145 00	0	$0
PE - Project Engineer	$150 00	8	$1,200
SPE - Senior Project Engineer	$175 00	0	$0
DEE - Design Engineer	$150 00	0	$0
DE - Designer	$110 00	62	$6,820
SD - Senior Designer	$125 00	0	$0
CT - Cadd Technician	$85 00	0	$0
CO - Construction Observer	$100 00	312	$31,200
		Subtotal Labor Costs	**$76,020**

ITEM	Quantity	Unit	Rate	Amount
SUBCONSULTANTS TITLE II				
SURVEY SERVICES				
Construction Staking (Hourly, as needed, per Schedule of Charges as stated herein, not to exceed)	1	LS	$3,200.00	$3,200
			SUBTOTAL SUBCONSULTANTS TITLE II	**$3,200**

REIMBURSABLES

ITEM	Quantity	Unit	Rate	Amount
Printing (Full size B&W)	1	each	$20.00	$20
Mileage (1 Trip/Bus. Day for 3 months at 2.2 miles)	132	mile	$0.58	$77
			SUBTOTAL REIMBURSABLES	$97
			SUBTOTAL TITLE II	**$79,317**

ANTICIPATED PROJECT DURATIONS:

The Engineer will commence services upon execution of this Contract and Notice to Proceed has been given. Services shall cease after close out of the Consultant's work. The tentative anticipated durations for this Contract are as follows:

City review time: **2 weeks** from receipt of each Deliverable

Topographic Survey- Duration**: 3 weeks**

Boundary Survey- Duration: **6 weeks** (Can be completed concurrently with Topo Survey)

30% Submittal- Duration: **3 weeks**

60% Submittal - Duration: **6 weeks**

100% Submittal - Duration: **4 weeks**

Easement Documents- Duration: **3 weeks** (Can be completed concurrently with 100% Submittal)

Bidding/Advertising - Duration: **6 weeks**

Construction - Duration: **3 months**

Project Close Out – Duration: **4 weeks** (Can be completed concurrently with Construction)

RESOLUTION NO. _____

A RESOLUTION AUTHORIZING THE MAYOR TO ENTER INTO AN AGREEMENT WITH CEI ENGINEERING ASSOCIATES FOR ENGINEERING AND PROJECT SERVICES FOR SE C LATERALS.

NOW, THEREFORE, BE IT RESOLVED BY THE CITY COUNCIL FOR THE CITY OF BENTONVILLE, ARKANSAS.

Section 1: That the Mayor be and is hereby authorized to enter into an agreement with CEI Engineering Associates for engineering and project services for SE C Laterals in an amount of $171,852.00 as set forth in the Professional Services Agreement attached hereto as Exhibit "A".

Section 2: This resolution shall be in full force and effect from and after the date of its passage.

PASSED and APPROVED this _____ day of _____, 2021.

APPROVED:

_____
MAYOR

ATTEST:

_____
CITY CLERK

Agenda Item Form

Date of City Council Meeting	**6/22/2021**
Department	**Engineering**
Submitted by	**Dan Weese**
Phone	**(479) 254-2024**

Item Type: (*Check Applicable Item Type*)					
☐ Budget Adjustment	☐ Change Order	☐ Informational	☐ Ordinance	☑ Resolution	☐ Bid Award

Recommendation/Suggested Action ***(Enter recommendation in space below)*:**

Resolution allowing the Mayor to enter into a professional service agreement with CEI Engineering Associates for engineering and project services for NW 9th and D Street. The cost of this agreement will be $237,090.00. This Firm was selected following the City's standard RFQ solicitation and selection process for the procurement of professional services in accordance with state law.

Estimated Cost	**$237,090.00**
Is this Item Budgeted?	☐ Yes ☑ No

If no, please explain how item will be funded ***(briefly explain in space below)*** **:**

This project is part of the Bond program.

Memorandum

To: Mayor and City Council

From: Dan Weese, City Engineer

Date: Thursday, June 10, 2021

Re: Professional Services Agreement for NW 9th and D Street

Project Description: NW 9th and D Street (Drainage Project, MUNIS # 21EN0009)

This project shall include professional services associated with the design of a drainage collection system generally beginning 430 feet north of the intersection of SW Glover St and SW 4th St, heading North until it outlets into a ravine at the North end of Hook Street.

CEI Engineering Associates has been selected to perform all related engineering services needed for this project. This Professional Services Agreement (PSA) amount for this project is $237,090.00.

Staff requests approval of a resolution allowing the Mayor to enter into a PSA with CEI Engineering Associates for this project.

Please contact me with any questions or concerns regarding this PSA or the project. My telephone number is (479) 254-2024 or I can be reached via email at dweese@bentonvillear.com

PROFESSIONAL SERVICES AGREEMENT

PROJECT NAME: **NW 9th and D Street (MUNIS# 21EN0009)** ("PROJECT")

THIS AGREEMENT ("AGREEMENT") is made in Benton County, Arkansas, by and between the City of Bentonville, Arkansas, hereinafter referred to as "CITY", and CEI ENGINEERING ASSOCIATES, INC., hereinafter referred to as "ENGINEER" (collectively, the "PARTIES").

The PARTIES have caused this AGREEMENT to be effective this ____ day of _____ , 20 ____ ("EFFECTIVE DATE").

RECITALS:

A. WHEREAS, the CITY has a need to perform capital improvement projects for the City of Bentonville, Arkansas; and

B. WHEREAS, The CITY has selected the ENGINEER and negotiated this AGREEMENT using the procedures as set forth in Ark. Code Ann. § 19-11-800; and

C. WHEREAS, the CITY wishes to contract for Professional Services; and

D. WHEREAS, The ENGINEER has the skill, experience, ability, background, certifications and knowledge to provide these services; and

E. WHEREAS, The ENGINEER wishes to perform such professional services under this AGREEMENT with the CITY.

NOW, THEREFORE, in consideration of the terms in this AGREEMENT, the CITY and ENGINEER agree to the following:

ARTICLE I - PROJECT DESCRIPTION

The PROJECT shall be as described in APPENDIX A. "Project Description", attached hereto and incorporated herein by reference.

ARTICLE II - SCOPE OF SERVICE

Upon issuance of a written Notice to Proceed by the CITY, ENGINEER agrees to provide the CITY the necessary professional services related to the PROJECT, as set forth in APPENDIX B, "Scope of Services" ("SCOPE"), attached hereto and incorporated herein by reference.

ARTICLE III - STANDARD OF CARE

ENGINEER shall at all times material hereto adhere to the generally accepted standard of care typically exhibited by similarly situated professionals performing similar scope(s) of service on projects of like size, scope, nature, cost, schedule, and complexity, at the same time and in the same general regional locale ("Standard of Care").

ARTICLE IV - ADDITIONAL SERVICES

A. Any service outside of the work described herein or included by reference hereto must be pre-approved by the CITY and executed as an AMENDMENT to this AGREEMENT by the Parties prior to any such work being completed; any such AMENDMENT shall be in accordance with the CITY'S purchasing laws and guidelines and may require approval from the Bentonville City Council.

B. ENGINEER shall make no claims for additional services or changes in the services until an AMENDMENT has been fully executed by the Parties.

ARTICLE V - SCHEDULE OF FEES, SERVICES AND PAYMENT

A. The term of this AGREEMENT shall commence on the EFFECTIVE DATE and shall proceed in accordance with APPENDIX C, "Schedule of Fees and Services, Key Milestones, and Durations for Major Tasks", attached hereto and incorporated herein by reference.

B. The cost of this AGREEMENT shall be in accordance with APPENDIX C.

C. CITY agrees to pay ENGINEER for all services authorized by inclusion in this AGREEMENT which have been properly performed by ENGINEER in accordance with this AGREEMENT.

D. All fees paid to ENGINEER shall be based on invoices submitted by ENGINEER for work performed under this AGREEMENT, less any previous payments. ENGINEER shall submit invoices for services related to this AGREEMENT on a monthly basis.

E. CITY reserves the right to delay, without penalty, any partial payment when, in the opinion of the CITY, ENGINEER has not made satisfactory progress on the Project based on the SCOPE. If CITY objects to any portion of an invoice, the CITY shall notify ENGINEER and shall pay all other portions of the invoice which are not in dispute. In the event of dispute, CITY and ENGINEER shall immediately make every effort to settle the disputed portion of the invoice.

F. In the event that the CITY becomes credibly informed that any representations of ENGINEER provided in its invoicing are wholly or partially inaccurate, CITY may withhold payment of sums then, or in the future, otherwise due to ENGINEER until the inaccuracy and the cause thereof is corrected to the CITY's reasonable satisfaction.

G. If the CITY fails to make any payment, not in dispute, due to ENGINEER within thirty (30) days after receipt of an invoice, then the amount due to the ENGINEER will increase at the lesser of one percent (1 %) per month or the maximum amount allowed by law after the 30th day. In addition, ENGINEER may, after giving seven (7) days' written notice to CITY, suspend its services and any deliverables until ENGINEER has been paid in full for all amounts outstanding more than thirty (30) days.

ARTICLE VI - INSURANCE

A. ENGINEER shall during the term hereof maintain in full force and effect the following insurance:

1. A comprehensive general liability policy of insurance for bodily injury, death and property damage insuring against all claims, demands or actions relating to the ENGINEER's performance of services pursuant to this AGREEMENT with a combined single limit of not less than $1,000,000.00 per occurrence and $2,000,000 in the aggregate for injury to persons (including death), and for property damage;
2. A policy of automobile liability insurance covering any vehicles owned and/or operated by ENGINEER, its officers, agents, and employees, and used in the performance of this AGREEMENT with policy limits of not less than $1,000,000.00 combined single limit and aggregate for bodily injury and property damage;
3. Statutory Worker's Compensation Insurance at the statutory limits and Employers Liability covering all of ENGINEER's employees involved in the provision of services under this AGREEMENT with policy limit of not less than $1,000,000.00; and
4. Professional Liability/Errors and Omissions coverage covering negligent acts, errors and omissions in the performance of professional services with policy limit of not less than $1,000,000.00.

B. All insurance and certificate(s) of insurance shall contain the following provisions:

1. Include CITY as additional insured as to all applicable coverage with the exception of Workers Compensation Insurance and Professional Liability/Errors and Omissions coverage; and
2. provide for at least thirty (30) days prior written notice to CITY for cancellation or non-renewal of the insurance;
3. provide for a waiver of subrogation against CITY for injuries, including death, property damage, or any other loss to the extent the same is covered by the proceeds of insurance, except for Professional Liability/Errors and Omissions coverage.

C. ENGINEER shall provide 30 day written notice to CITY of any material change of or to the insurance required herein.

D. All insurance companies providing the required insurance shall be authorized to transact business in Arkansas and rated at least "A" by AM Best or other equivalent rating service. A certificate of insurance evidencing the required insurance and all endorsements required by this Agreement shall be submitted prior to commencement of services.

E. In the event that additional or greater insurance requirements are warranted, these requirements shall be included as an Appendix, which will be attached hereto and incorporated by reference.

ARTICLE VII - RIGHT OF ACCESS

A. CITY will obtain and/or furnish right-of-access for ENGINEER to perform any required studies, surveys, tests or other necessary investigations in relation to the PROJECT.

B. ENGINEER will take reasonable precautions to minimize damage to the personal or real property in the performance of such surveys, tests, studies and investigations.

C. CITY recognizes that ENGINEER's operations and use of equipment may unavoidably alter existing conditions or affect the environment at the PROJECT site. The cost of repairing such damage shall be the responsibility of ENGINEER, at no additional cost to the CITY. In the event that ENGINEER fails to correct such damages, CITY is entitled to utilize CITY forces or other labor to repair the damage; any costs incurred by CITY for such work shall be deducted from the monies due to ENGINEER.

ARTICLE VIII - RECORDS AND RETENTION

A. All surveys, studies, proposals, applications, drawings, plans, specifications and other documents, including those in electronic form, prepared by ENGINEER and its ENGINEERs, subcontractors, agents, representatives, and/or employees in connection with this AGREEMENT ("PROJECT DOCUMENTS") are intended for the use and benefit of CITY. ENGINEER and its ENGINEERs, subcontractors, agents, representatives, and/or employees shall be deemed the authors of their respective part of the PROJECT DOCUMENTS. Notwithstanding anything to the contrary, CITY shall own, have, and retain all rights, title and interest in and to all PROJECT DOCUMENTS, whether in draft form or final form, which are produced at CITY's request or otherwise produced from ENGINEER's performance of the work described herein for CITY. The CITY's ownership of PROJECT DOCUMENTS shall not apply to ENGINEER's proprietary standard details that were developed by the ENGINEER prior to the commencement of this PROJECT.

B. CITY shall have full authority to reuse, reproduce, publish, disclose and distribute PROJECT DOCUMENTS, as needed, according to Arkansas State Law.

C. ENGINEER shall, upon completion of the services and full payment for the ENGINEER'S services by the CITY, or earlier termination and appropriate compensation as provided by this AGREEMENT, provide the CITY with all PROJECT DOCUMENTS prepared by ENGINEER pursuant to this AGREEMENT in formats requested by the CITY.

D. All instruments of service (including plans, specifications, drawings, reports, designs, computations, computer programs, estimates, surveys, other data or work items, etc.) prepared under this AGREEMENT shall be submitted for approval to the CITY. All instruments of service shall be professionally sealed in accordance to applicable laws or at CITY's request.

E. Acceptance and approval of the PROJECT DOCUMENTS by the CITY shall not constitute nor be deemed a release of the responsibility and liability of ENGINEER, its employees, associates, agents and ENGINEERs for the accuracy or competency of their designs, working drawings and specifications, or other documents and work; nor shall such approval be deemed to be an assumption of such responsibility by the CITY for any defect in the designs, working drawings and specifications, or other documents prepared by ENGINEER, its employees, contractor, agents and ENGINEERs.

F. ENGINEER will retain the PROJECT DOCUMENTS for a period of three years following project completion. During this three year period, any requests for document recovery and reproduction will be assessed a fee in accordance with ENGINEER's FEES.

ARTICLE IX - SAFETY

A. CITY agrees to inform ENGINEER of any applicable site safety procedures and regulations known to CITY as well as any special safety concerns or dangerous conditions at the site of which the CITY is aware, which ENGINEER shall communicate to its employees. ENGINEER and its employees shall adhere to such procedures and regulations once notice has been given by the CITY.

B. Unless specifically provided in the SCOPE, ENGINEER shall not have any responsibility for overall job safety at the site. If in the ENGINEER's opinion, its field personnel are unable to access required locations or perform required services in conformance with applicable safety standards, ENGINEER may immediately suspend performance until such safety standards can be attained.

C. ENGINEER agrees to indemnify and hold harmless the CITY for any safety conditions that may arise out of ENGINEER's performance of this AGREEMENT.

ARTICLE X - TERMINATION

A. CITY may suspend or terminate this AGREEMENT for cause or without cause at any time by giving written notice to ENGINEER. In the event suspension or termination is without cause, payment to ENGINEER, in accordance with the terms of this AGREEMENT, will be made on the basis of services reasonably determined by the CITY to be satisfactorily performed to the date of suspension or termination. Such payment will be due upon delivery of all instruments of service to CITY.

B. Should the CITY require a modification of this AGREEMENT with the ENGINEER, and in the event the CITY and ENGINEER fail to agree upon a modification to this AGREEMENT, the CITY shall have the option of terminating this AGREEMENT and the ENGINEER's services hereunder at no additional cost other than the payment to ENGINEER, in accordance with the terms of this AGREEMENT, for the services reasonably determined by the CITY to be properly performed by ENGINEER prior to such termination date.

C. If, for whatever adequate funding is not made available by CITY to support or justify continuation of the level of services to be provided by ENGINEER under this AGREEMENT, CITY may terminate or reduce the amount of services to be provided by ENGINEER under this AGREEMENT. In such event, CITY will notify ENGINEER in writing at least thirty (30) days in advance of such termination or reduction of services for lack of funds.

D. In no event shall the CITY pay to ENGINEER fees for termination outside of payment for services reasonably determined by the City to be properly performed prior to termination.

ARTICLE XI - INDEMNIFICATION

A. For purposes of this AGREEMENT, ENGINEER agrees to indemnify, hold harmless the CITY, its officers and employees from any loss, damage, liability or expense, of any nature whatsoever to the extent caused by the negligence, willful misconduct, or other actionable fault of ENGINEER, its affiliates, subsidiaries, employees, agents, assignees, and subcontractors and their respective employees and agents. ENGINEER is not required hereunder to defend the CITY, its officers, appointees, employees, or agents from assertions that they were negligent, nor to indemnify and hold them harmless from liability based on the CITY's negligence

B. Nothing contained herein shall waive any governmental immunity CITY may be entitled to by law.

C. This provision shall survive the termination of this AGREEMENT.

ARTICLE XII - CONTINGENCY CLAUSE

A. The CITY may add a contingency amount to the contract to cover additional services as described in APPENDIX B. Any use of such contingency funds for additional services shall be executed as an AMENDMENT to this AGREEMENT.

B. The Contingency shall in no manner substitute for an official AMENDMENT.

ARTICLE XIII - RELATIONSHIP OF THE PARTIES

It is understood and agreed by and between the parties that the ENGINEER, in satisfying the conditions of this AGREEMENT, is acting independently, and that the CITY assumes no responsibility or liabilities to any third party in connection with ENGINEER's actions. All services to be performed by the ENGINEER pursuant to this AGREEMENT shall be in the capacity of an Independent Contractor, and not as an agent or employee of CITY. The ENGINEER shall supervise the performance of its services and shall be entitled to control the manner and means by which its services are to be performed, subject to the terms of this AGREEMENT. There is no intended third party beneficiary to the AGREEMENT and nothing contained herein shall create a contractual relationship with, or any rights in favor of, any third party.

ARTICLE XIV - DISPUTE RESOLUTION

A. CITY and ENGINEER agree that disputes relative to the services will first be addressed by negotiations between the Parties. If direct negotiations fail to resolve the dispute, the Party initiating the claim that is the basis for dispute may take such steps as it deems necessary to protect its interests; provided, however, that notwithstanding any such dispute, ENGINEER will proceed with the services as per this AGREEMENT as if no dispute existed, and CITY will continue to make payment for ENGINEER's completed services; and provided further that no dispute will be submitted to arbitration without both Parties' express written consent.

ARTICLE XV - OPINIONS OF PROBABLE COST

A. Since the ENGINEER has no control over the cost of labor, materials, equipment or services furnished by others, or over methods of determining prices, or over competitive bidding or market conditions, the ENGINEER's estimates of PROJECT costs and construction costs provided for herein are to be made on the basis of the ENGINEER's experience and qualifications and represent the ENGINEER's judgement in accordance with the "Standard of Care". The ENGINEER cannot and does not guarantee that proposals, bids or actual PROJECT or construction costs will not vary from estimates prepared by the ENGINEER.

B. The CITY understands that the construction cost estimates developed by the ENGINEER do not establish a limit for construction contract amount. If the actual amount of the low construction bid exceeds the construction budget established by the CITY, the ENGINEER will not be required to re-design the PROJECT or any part thereof without additional compensation.

ARTICLE XVI - APPLICABLE LAWS

ENGINEER shall comply with all Federal, State, Local laws, ordinances, resolutions, specifications, regulations and all other laws or regulations relating or applicable to service to be performed under this AGREEMENT. Interpretation of this AGREEMENT and disputes arising out of or related to this AGREEMENT will be subject to and governed by the laws of the State of Arkansas. Jurisdiction and venue for any suit arising out of or related to this AGREEMENT will be in the District Court of Benton County, Arkansas,

ARTICLE XVII - PRECEDENCE

This AGREEMENT shall take precedence over any inconsistent of contradictory provisions contained in any proposal, contract, purchase order, requisition, notice to proceed, or any other like document regarding the PROJECT or ENGINEER's services.

ARTICLE XVIII - SEVERABILITY

A. In the event that one or more provisions contained herein shall, for any reason, be deemed invalid, illegal, void or unenforceable, in whole or in part, the remaining provisions hereof shall remain in full force and effect.

B. In the event that any provision hereof is in conflict with any statutory provision of the State of Arkansas, said provision, which may be in conflict therewith, shall be deemed inoperative, null and void insofar as it may be in conflict therewith, and shall be deemed modified to conform to such statutory provisions; provided, however, that the remaining provisions of this AGREEMENT will be unaffected and will continue to be valid and enforceable.

ARTICLE XIX - SURVIVAL OF OBLIGATIONS

The obligations of the Parties contained in this AGREEMENT, which by their nature survive after the term of the AGREEMENT, shall survive the termination or expiration of this AGREEMENT and continue indefinitely or as otherwise provided by this AGREEMENT.

ARTICLE XIX – ENTIRE AGREEMENT

This AGREEMENT, including all documents and Appendices included by reference herein, constitutes the entire agreement between the PARTIES and supersedes all prior agreements, whether oral or written, covering the same subject matter. This AGREEMENT may not be modified or amended except in writing, mutually agreed upon and accepted by both PARTIES to this AGREEMENT.

The cost of this AGREEMENT including all reimbursable expenses as described in the FEES AND SCHEDULE, **shall not exceed:**

Two hundred and thirty seven thousand and ninety dollars.

$ 237,090, unless otherwise approved by the CITY through an official AMENDMENT agreed and executed by CITY and ENGINEER.

IN WITNESS THEREOF, the CITY and ENGINEER have executed this AGREEMENT, the EFFECTIVE DATE of which is indicated on page 1 of this AGREEMENT.

CITY OF BENTONVILLE	**CEI ENGINEERING ASSOCIATES, INC.**
CITY	ENGINEER
	[redacted]
BY	
MAYOR	**Principal/VP of Operations**
TITLE	TITLE
	6/9/2021
DATE SIGNED	DATE SIGNED

APPENDICES

APPENDIX A	PROJECT DESCRIPTION
APPENDIX B	SCOPE OF SERVICES
APPENDIX C	JUSTIFICATION OF FEES AND SERVICES, KEY MILESTONES, AND DURATIONS FOR MAJOR TASKS

APPENDIX A
PROJECT DESCRIPTION

This project shall include professional services associated with the design of a drainage collection system generally beginning 430 feet north of the intersection of SW Glover St and SW 4th St, heading North until it outlets into a ravine at the North end of Hook Street. The proposed network details and total length is shown below in Table 1 and Exhibit A.

Description	Feet
24" Pipe (SW Glover St)	774.00
36" Pipe (SW E St)	283.00
60" X 24" Box Culvert (W Central Ave - NW 4th St)	1761.00
120" X 60" Box Culvert (NW 4th St - Hook St) - Outlet Discharge	1095.00
36" Pipe (NW F St - Jackson St)	1180.00
18" Pipe (NW 3rd St)	221.00
Additional Pipe (Jefferson St)	171.00
Total	5485.00

Table 1: Proposed Drainage Network

Exhibit A

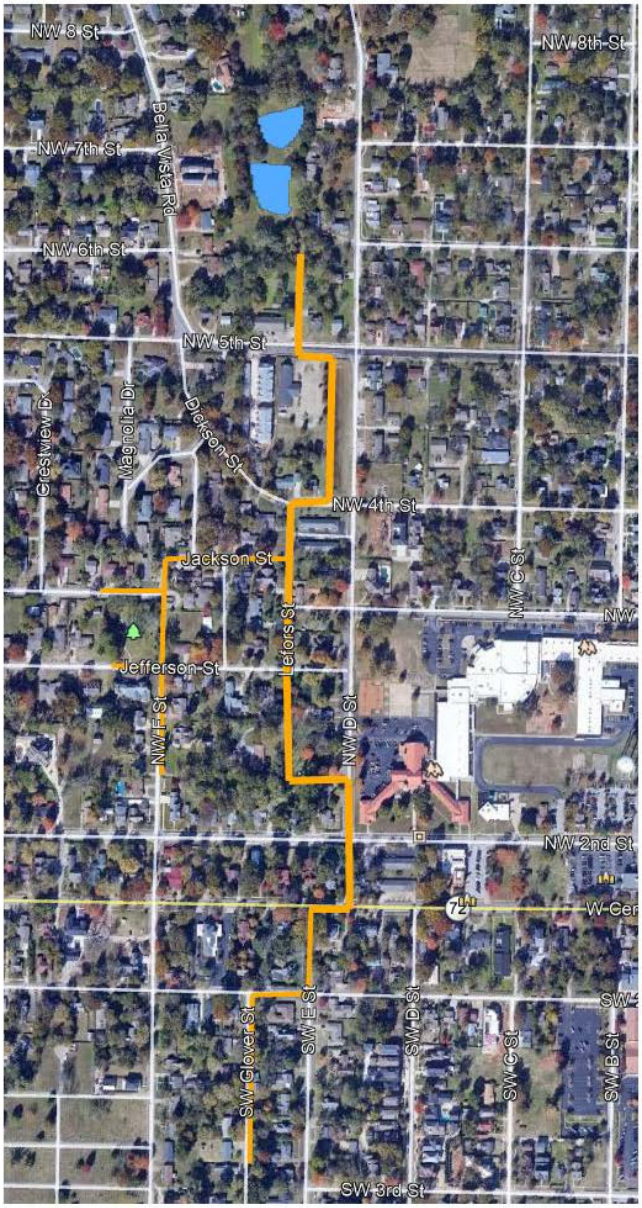
NW 8 St
NW 8th St
NW 7th St
Bella Vista Rd
NW 6th St
NW 5th St
Crestview Dr
Magnolia Dr
Dickson St
NW 4th St
Jackson St
NW C St
Lefors St
Jefferson St
NW F St
NW D St
NW 2nd St
72
SW E St
SW D St
SW C St
SW B St
SW Glover St
SW 3rd St

APPENDIX B
SCOPE OF SERVICES

SERVICES BY THE CITY

- Furnish required information and approvals and perform responsibilities and activities in a timely manner to facilitate orderly progress of the work.
- Provide criteria and information as to the requirements for the PROJECT, including design objectives and constraints, right-of-way, capacity and performance requirements, and any budgetary limitations.
- Furnish copies of design and construction standards that the CITY will require to be included in the drawings and specifications.
- Assist the ENGINEER by placing at their disposal all available information pertinent to the PROJECT, including previous reports and other data relative to design or construction of the PROJECT.
- Arrange for access to public and private property as required for the PROJECT.
- Obtain the necessary lands, easements and rights-of-way for the PROJECT.
- Reimburse all plan review, advertising costs, permits and approvals in connection with the PROJECT.
- Pay the ENGINEER is accordance with the terms of the AGREEMENT.

If the CITY observes or otherwise becomes aware of any fault or defect in the PROJECT, the CITY shall give prompt written notice thereof to the ENGINEER.

SERVICES BY THE ENGINEER

- Meet all requirements of the AGREEMENT including any AMENDMENTS.
- Produce all documents and services needed for the PROJECT, including but not limited to:

  Topographical surveys, Right-of-Way Surveys, Utility Surveys and Coordination, Traffic Study, Geotechnical Investigations, Environmental Surveys, Permitting, Major Drainage Study, Conceptual Design Phase (30%), Preliminary Design Phase (60%), Final Design Phase (90%), Public Meetings, Bidding Services, Construction Support Services, Project Management Services, Project Closeout.
- Project Management services for the entire life of the project that align with the Project Management Institute Project Management Book of Knowledge Latest Edition.
- All Design and Construction shall conform to Federal, State and Local regulations.
- Coordinate PROJECT with Franchise Utility Companies to assure adequate space for all facilities and timely relocations.
- Coordinate and Furnish approvals and permits from all Regulatory Agencies having jurisdiction over the PROJECT.
- Provide all services relevant to City of Bentonville Plan Review procedures.
- Create and provide all documents for property acquisitions and assist with any layout or staking required.
- Coordinate and facilitate meetings with CITY and Agencies for plan review, project coordination and right-of-way.
- Subcontracting of services by the ENGINEER shall have prior approval of the CITY.

SUPPLEMENTAL SERVICES BY THE ENGINEER

- **Title 1 Scope of Services:**
  - **Design and Plans**
    - CEI shall perform design services including preparing construction documents, ROW Permitting, ADEQ Permitting, Utility Coordination with Franchise Utilities and City of Bentonville Utilities, Public Input Meetings and Bidding Administration up to, and including, Bid Tabulation and Letter of Recommendation of the apparent low bidder. It will also include project management services related to the above items.
    - Services do not include roadway improvements.
  - **Survey**
    - Original topographic survey and boundary were obtained through another contract with a separate consulting company. That contract is now null and void. Any additional topographic survey or boundary survey needed beyond what was completed under the original contract will be subject to an amendment.
    - **Topographic Survey**
      - CEI shall perform a 50' wide Topographical Survey along the routes provided by the client attached shown herein as **Exhibit "B",** consisting of 1' contours derived from a digital terrain model and shown in accordance with the National Mapping Standards. Topographic survey will include all above-ground physicals and underground utilities. Location of underground utilities will be based on evidence found during the survey, markings by One Call service, and utility plans provided by Client. CEI will show parcel lines per available GIS data for the initial phase.
    - **Limited Boundary Survey**
      - CEI will provide boundary survey to establish existing right-of-way, based on monumentation found and deeds along the route. Additional boundary verification dependent on any issues found is covered under Section V of the original contract. A 50-year Easement and Current Deed search will be ordered to show affecting easements and will be billed as a reimbursable. This phase does not cover easement exhibits and descriptions. No monuments will be set in the field and a signed/sealed survey meeting Arkansas Minimum Requirements for Property Surveys will not be a deliverable.
    - **Easement Documents**
      - CEI shall provide exhibit & description for 10 proposed easements. CEI will utilize the standard easement document provided by the city of Bentonville and insert the description and exhibit describing the location of the easements to allow for recording by the city of Bentonville. Any additional parcel easement exhibits and descriptions beyond what is stated in the justification of costs and fees exhibit will require an extra work authorization to be executed.
    - **Construction Staking**
      - CEI shall provide construction staking services for proposed storm drainage design only, along the 11,000 LF route described in the project description, on an as needed basis to be performed hourly per our schedule of charges as stated herein. CEI will provide construction horizontal and vertical control at every 1000 feet.
    - **Reimbursables**
      - The scope of services listed above is intended as fee only and does not include reimbursable expenses such as application fees, reprographics, etc.
      - Reimbursables include but are not limited to a 50-Year easement and current deed search.

Exhibit B

- **Title 2 Scope of Services:**
  - CEI shall perform construction support services and construction observation for the anticipated duration of the project as noted in the justification of fees. Services include pay application reviews, review and approval of construction submittals, review and approval of change orders, as-built drawings, project management, and final project close out.

APPENDIX C

SCHEDULE OF FEES AND SERVICES, KEY MILESTONES, AND DURATIONS FOR MAJOR TASKS

SCHEDULE OF FEES:

TITLE 1:

DESIGN LABOR COSTS: $94,540

SURVEY: $17,700

REIMBURSABLES: $600

SUBTOTAL TTLE 1:$112,840

TITLE 2:

LABOR COSTS: $106,470

SURVEY: $17,500

REIMBURSABLES: $280

SUBTOTAL TITLE 2: $124,250

TOTAL TITLE 1 & TITLE 2: $237,090

Attachment C- Justification of Costs and Fees
June 9th, 2021
NW 9th and D Street (MUNIS# 21EN0009)
CEI Engineering Inc.
Summary

DRAINAGE DESIGN & PLANS - TITLE 1

MANHOURS												
TASK	PC	DM	PM	APM	PE	SPE	DEE	DE	SD	CT	AA	TOTAL
30% Conceptual Design Phase												
Prepare Title Sheet								1		4		5
Prepare Plan and Profile Sheets								12		30		42
Initial Hydraulics and Box Culvert Sizing					12			24				36
Prepare Preliminary Cost Estimate					2			6		6		14
Exhibits/KMZ										6		6
In-House Quality Control Review and Revisions	2	8	16		6			10		12		54
City Review, Submittal Meetings, and Coordination		2	6									8
Coordination with Utilities			2					4				6
Coord. W/ Subcontractors (Survey,Geotech,Env) & Other Firms	1	6	16									23
City Coordination	2	4	6									12
60% Design Phase												
Update Plans Per City Comments								4		10		14
Prepare Title Sheet								1		2		3
Prepare Special Details								1		4		5
Prepare Survey Data Sheets										4		4
Prepare Temporary Erosion Control Detail Sheets								6	2	4		12
Prepare Demo Plans								2		4		6
Prepare Plan and Profile Sheets								24		16		40
Prepare Drainage Report (1 Hydraulic study)								60				60
Prepare Drainage Cross Sections								14				14
Prepare Public Involvement Exhibits								12				12
Public Involvement Meeting		3	3									6
Review Public Comments and Develop Responses		2	2									4
Develop Public Meeting Summary											3	3
Prepare Cost Estimate								3		6		9
In-House Quality Control Review and Revisions	2	6	16		18			8		12		62
Submit 60% Plans for Review		1	4									5
City Review, Submittal Meetings, and Coordination	2	2	6									10
Disposition of Comments		1	2									3
Coordination with Utilities		2	8					4				14
Coord. W/ Subcontractors (Survey) & Other Firms	1	2	10									13
Prepare Specifications		2	4		24			4		4		38
Prepare SWPPP			2		8			4				14
100% Design Phase												
Revisions to Plans and SP's from 60% Comments					4					8		12
Prepare Cost Estimate			2		1					2		5
In-House Quality Control Review and Revisions	2	4	6					10		14		36
Submit 100% Plans for Review		2	2								1	5
City Review, Submittal Meetings, and Coordination		2	8									10
Update Plans Per City Comments								6		10		16
Coordination with Utilities			6					4				10
Bid Advertisement and Bidding			6		6						4	16
Bid Addendums	1	2	6					8			2	19
Pre Bid Meeting	1	3	3									7
Bid Opening	1	2	2									5
Coord. W/ Subcontractors (Survey) & Other Firms	1	2	10									13
TOTAL MH - DRAINAGE DESIGN & PLANS - TITLE 1	16	58	154	0	81	0	0	232	2	158	10	711

DESIGN LABOR COSTS			
Category - Description	Rate	MH	Amount
PC - Principal-in-Charge	$225.00	16	$3,600
DM - Department Manager	$205.00	58	$11,890
PM - Project Manager	$175.00	154	$26,950
APM - Assistant Project Manager	$145.00	0	$0
PE - Project Engineer	$150.00	81	$12,150
SPE - Senior Project Engineer	$175.00	0	$0
DEE - Design Engineer	$150.00	0	$0
DE - Designer	$110.00	232	$25,520
SD - Senior Designer	$125.00	2	$250
CT - Cadd Technician	$85.00	158	$13,430

Attachment C- Justification of Costs and Fees
June 9th, 2021
NW 9th and D Street (MUNIS# 21EN0009)
CEI Engineering Inc.
Summary

DRAINAGE DESIGN & PLANS - TITLE 1

MANHOURS												
TASK	PC	DM	PM	APM	PE	SPE	DEE	DE	SD	CT	AA	TOTAL
AA - Admin										$75.00	10	$750
											SUBTOTAL DESIGN LABOR COSTS TITLE 1	**$94,540**
ITEM									Quantity	Unit	Rate	Amount
SUBCONSULTANTS TITLE 1												
SURVEY SERVICES												
Topographic Survey									1	LS	$4,200.00	$4,200
Limited Boundary Survey									1	LS	$5,000.00	$5,000
Easement Documents (10 Parcels)									10	EACH	$850.00	$8,500
											SUBTOTAL SUBCONSULTANTS TITLE 1	**$17,700**
REIMBURSABLES												
ITEM									Quantity	Unit	Rate	Amount
Printing (Full size B&W)									8	each	$50.00	$400
ADEQ Submittal Fee									1	LS	$200.00	$200
											SUBTOTAL REIMBURSABLES	$600
											SUBTOTAL TITLE 1	**$112,840**

Attachment C- Justification of Costs and Fees
June 9th, 2021
NW 9th and D Street (MUNIS# 21EN0009)

DRAINAGE DESIGN & PLANS - TITLE 1

BASIS OF ESTIMATE	
Description	Feet
24" Pipe (SW Glover St)	774.00
36" Pipe (SW E St)	283.00
60" X 24" Box Culvert (W Central Ave - NW 4th St)	1761.00
120" X 60" Box Culvert (NW 4th St - Hook St) - Outlet Discharge	1095.00
36" Pipe (NW F St - Jackson St)	1180.00
18" Pipe (NW 3rd St)	221.00
Additional Pipe (Jefferson St)	171.00
Total	5485.00
Description	

Attachment C- Justification of Costs and Fees
June 9th, 2021
NW 9th and D Street (MUNIS# 21EN0009)

Title II

MANHOURS

TASK	PC	DM	PM	APM	PE	SPE	DEE	DE	SD	CT	CO	TOTAL
General Coordination (City, Contractor, Utility, etc)	4	16	48									68
Pay Application Reviews	4	4	8					16			16	48
Answer Questions During Construction		20	80									100
Field Visit		12	32									44
Half-Time Observation (4 months @ 5 Hr/day)											400	400
Review/Approve Construction Submittals & Change Orders	4	8	20		16			60				108
As-Built Drawings		2	8					40				50
TOTAL MH - Title II	12	62	196	0	16	0	0	116	0	0	416	818

LABOR COSTS

Category - Description	Rate	MH	Amount
PC - Principal-in-Charge	$225.00	12	$2,700
DM - Department Manager	$205.00	62	$12,710
PM - Project Manager	$175.00	196	$34,300
APM - Assistant Project Manager	$145.00	0	$0
PE - Project Engineer	$150.00	16	$2,400
SPE - Senior Project Engineer	$175.00	0	$0
DEE - Design Engineer	$150.00	0	$0
DE - Designer	$110.00	116	$12,760
SD - Senior Designer	$125.00	0	$0
CT - Cadd Technician	$85.00	0	$0
CO - Construction Observer	$100.00	416	$41,600
		Subtotal Labor Costs	**$106,470**

ITEM	Quantity	Unit	Rate	Amount
SUBCONSULTANTS TITLE II				
SURVEY SERVICES				
Construction Staking (Hourly, as needed, per Schedule of Charges as stated herein, not to exceed)	1	LS	$17,500.00	$17,500
			SUBTOTAL SUBCONSULTANTS TITLE II	**$17,500**

REIMBURSABLES

ITEM	Quantity	Unit	Rate	Amount
Printing (Full size B&W)	1	each	$20.00	$20
Mileage (1 Trip/Bus. Day for 4 months at 5.6 miles)	448	mile	$0.58	$260
Construction Staking (Hourly, as needed, per Schedule of Charges as stated herein, not to exceed)	1	LS		$0
			SUBTOTAL REIMBURSABLES	$280
			SUBTOTAL TITLE II	**$124,250**

ANTICIPATED PROJECT DURATIONS:

The Engineer will commence services upon execution of this Contract and Notice to Proceed has been given. Services shall cease after close out of the Consultant's work. The tentative anticipated durations for this Contract are as follows:

City review time: **2 weeks** from receipt of each Deliverable

Topographic Survey – Duration: **2 weeks**

Boundary Survey- Duration: **6 weeks** (Can be completed concurrently with Topo Survey)

30% Submittal- Duration: **3 weeks**

60% Submittal - Duration: **8 weeks**

100% Submittal - Duration: **4 weeks**

Easement Documents- Duration: **3 weeks** (Can be completed concurrently with 100% Submittal)

Bidding/Advertising - Duration: **6 weeks**

Construction - Duration: **4 months**

Project Close Out – Duration: **4 weeks** (Can be completed concurrently with Construction)

RESOLUTION NO. _____

A RESOLUTION AUTHORIZING THE MAYOR TO ENTER INTO AN AGREEMENT WITH CEI ENGINEERING ASSOCIATES FOR ENGINEERING AND PROJECT SERVICES FOR NW 9TH AND D STREET.

NOW, THEREFORE, BE IT RESOLVED BY THE CITY COUNCIL FOR THE CITY OF BENTONVILLE, ARKANSAS.

Section 1: That the Mayor be and is hereby authorized to enter into an agreement with CEI Engineering Associates for engineering and project services for NW 9th and D Street in an amount of $237,090.00 as set forth in the Professional Services Agreement attached hereto as Exhibit "A".

Section 2: This resolution shall be in full force and effect from and after the date of its passage.

PASSED and APPROVED this _____ day of _____, 2021.

APPROVED:

_____
MAYOR

ATTEST:

_____
CITY CLERK

Agenda Item Form

Date of City Council Meeting	**6/22/2021**
Department	**Engineering**
Submitted by	**Dan Weese**
Phone	**(479) 254-2024**

Item Type: (*Check Applicable Item Type*)

☐ Budget Adjustment	☐ Change Order	☐ Informational	☐ Ordinance	☑ Resolution	☐ Bid Award

Recommendation/Suggested Action *(Enter recommendation in space below)*:

Resolution allowing the Mayor to enter into a professional services agreement with Crafton, Tull & Associates, Inc. for engineering and project services for Moberly Lane - SE 14th to SE 8th. The cost of this contract will be $535,000.00. This Firm was selected following the City's standard RFQ solicitation and selection process for the procurement of professional services in accordance with state law.

Estimated Cost	**$535,000.00**
Is this Item Budgeted?	☐ Yes ☑ No

If no, please explain how item will be funded *(briefly explain in space below)* **:**

This project is part of the Bond program.

Memorandum

To: Mayor and City Council

From: Dan Weese, City Engineer

Date: Thursday, June 10, 2021

Re: PSA for MOBERLY LN - SE 14TH TO SE 8TH

Project Description:

MOBERLY LN - SE 14TH TO SE 8TH widening.

Crafton, Tull & Associates, Inc. has been selected to perform all related engineering services needed for this project. This Professional Services Agreement (PSA) amount for this project is $535,000.00.

Staff requests approval of a resolution allowing the Mayor to enter into a PSA with Crafton, Tull & Associates, Inc. for this project.

Please contact me with any questions or concerns regarding this PSA or the project as a whole. My telephone number is (479) 254-2024 or I can be reached via email at dweese@bentonvillear.com

Munis # 21ST0004

PROFESSIONAL SERVICES AGREEMENT

PROJECT NAME: MOBERLY LN – SE14TH TO SE8TH ("PROJECT")

THIS AGREEMENT ("AGREEMENT") is made in Benton County, Arkansas, by and between the City of Bentonville, Arkansas, hereinafter referred to as "CITY", and CRAFTON, TULL & ASSOCIATES, INC., hereinafter referred to as "ENGINEER" (collectively, the "PARTIES").

The PARTIES have caused this AGREEMENT to be effective this ____day of _____, 20___ ("EFFECTIVE DATE").

RECITALS:

A. WHEREAS, the CITY has a need to perform capital improvement projects for the City of Bentonville, Arkansas; and

B. WHEREAS, The CITY has selected the ENGINEER and negotiated this AGREEMENT using the procedures as set forth in Ark. Code Ann. § 19-11-800; and

C. WHEREAS, the CITY wishes to contract for Professional Services; and

D. WHEREAS, The ENGINEER has the skill, experience, ability, background, certifications and knowledge to provide these services; and

E. WHEREAS, The ENGINEER wishes to perform such professional services under this AGREEMENT with the CITY.

NOW, THEREFORE, in consideration of the terms in this AGREEMENT, the CITY and ENGINEER agree to the following:

ARTICLE I - PROJECT DESCRIPTION

The PROJECT shall be as described in APPENDIX A. "Project Description", attached hereto and incorporated herein by reference.

ARTICLE II - SCOPE OF SERVICE

Upon issuance of a written Notice to Proceed by the CITY, ENGINEER agrees to provide the CITY the necessary professional services related to the PROJECT, as set forth in APPENDIX B, "Scope of Services" ("SCOPE"), attached hereto and incorporated herein by reference.

ARTICLE III - STANDARD OF CARE

ENGINEER shall at all times material hereto adhere to the generally accepted standard of care typically exhibited by similarly situated professionals performing similar scope(s) of service on projects of like size, scope, nature, cost, schedule, and complexity, at the same time and in the same general regional locale ("Standard of Care").

ARTICLE IV - ADDITIONAL SERVICES

A. Any service outside of the work described herein or included by reference hereto must be pre-approved by the CITY and executed as an AMENDMENT to this AGREEMENT by the Parties prior to any such work being completed; any such AMENDMENT shall be in accordance with the CITY'S purchasing laws and guidelines and may require approval from the Bentonville City Council.

B. ENGINEER shall make no claims for additional services or changes in the services until an AMENDMENT has been fully executed by the Parties.

ARTICLE V - SCHEDULE OF FEES, SERVICES AND PAYMENT

A. The term of this AGREEMENT shall commence on the EFFECTIVE DATE and shall proceed in accordance with APPENDIX C, "Schedule of Fees and Services, Key Milestones, and Durations for Major Tasks", attached hereto and incorporated herein by reference.

B. The cost of this AGREEMENT shall be in accordance with APPENDIX C.

C. CITY agrees to pay ENGINEER for all services authorized by inclusion in this AGREEMENT which have been properly performed by ENGINEER in accordance with this AGREEMENT.

D. All fees paid to ENGINEER shall be based on invoices submitted by ENGINEER for work performed under this AGREEMENT, less any previous payments. ENGINEER shall submit invoices for services related to this AGREEMENT on a monthly basis.

E. CITY reserves the right to delay, without penalty, any partial payment when, in the opinion of the CITY, ENGINEER has not made satisfactory progress on the Project based on the SCOPE. If CITY objects to any portion of an invoice, the CITY shall notify ENGINEER and shall pay all other portions of the invoice which are not in dispute. In the event of dispute, CITY and ENGINEER shall immediately make every effort to settle the disputed portion of the invoice.

F. In the event that the CITY becomes credibly informed that any representations of ENGINEER provided in its invoicing are wholly or partially inaccurate, CITY may withhold payment of sums then, or in the future, otherwise due to ENGINEER until the inaccuracy and the cause thereof is corrected to the CITY's reasonable satisfaction.

G. If the CITY fails to make any payment, not in dispute, due to ENGINEER within thirty (30) days after receipt of an invoice, then the amount due to the ENGINEER will increase at the lesser of one percent (1 %) per month or the maximum amount allowed by law after the 30th day. In addition, ENGINEER may, after giving seven (7) days' written notice to CITY, suspend its services and any deliverables until ENGINEER has been paid in full for all amounts outstanding more than thirty (30) days.

ARTICLE VI - INSURANCE

A. ENGINEER shall during the term hereof maintain in full force and effect the following insurance:

1. A comprehensive general liability policy of insurance for bodily injury, death and property damage insuring against all claims, demands or actions relating to the ENGINEER's performance of services pursuant to this AGREEMENT with a combined single limit of not less than $1,000,000.00 per occurrence and $2,000,000 in the aggregate for injury to persons (including death), and for property damage;
2. A policy of automobile liability insurance covering any vehicles owned and/or operated by ENGINEER, its officers, agents, and employees, and used in the performance of this AGREEMENT with policy limits of not less than $1,000,000.00 combined single limit and aggregate for bodily injury and property damage;
3. Statutory Worker's Compensation Insurance at the statutory limits and Employers Liability covering all of ENGINEER's employees involved in the provision of services under this AGREEMENT with policy limit of not less than $1,000,000.00; and
4. Professional Liability/Errors and Omissions coverage covering negligent acts, errors and omissions in the performance of professional services with policy limit of not less than $1,000,000.00.

B. All insurance and certificate(s) of insurance shall contain the following provisions:

1. Include CITY as additional insured as to all applicable coverage with the exception of Workers Compensation Insurance and Professional Liability/Errors and Omissions coverage; and
2. provide for at least thirty (30) days prior written notice to CITY for cancellation or non-renewal of the insurance;
3. provide for a waiver of subrogation against CITY for injuries, including death, property damage, or any other loss to the extent the same is covered by the proceeds of insurance, except for Professional Liability/Errors and Omissions coverage.

C. ENGINEER shall provide 30 day written notice to CITY of any material change of or to the insurance required herein.

D. All insurance companies providing the required insurance shall be authorized to transact business in Arkansas and rated at least "A" by AM Best or other equivalent rating service. A certificate of insurance evidencing the required insurance and all endorsements required by this Agreement shall be submitted prior to commencement of services.

E. In the event that additional or greater insurance requirements are warranted, these requirements shall be included as an Appendix, which will be attached hereto and incorporated by reference.

ARTICLE VII - RIGHT OF ACCESS

A. CITY will obtain and/or furnish right-of-access for ENGINEER to perform any required studies, surveys, tests or other necessary investigations in relation to the PROJECT.

B. ENGINEER will take reasonable precautions to minimize damage to the personal or real property in the performance of such surveys, tests, studies and investigations.

C. CITY recognizes that ENGINEER's operations and use of equipment may unavoidably alter existing conditions or affect the environment at the PROJECT site. The cost of repairing such damage shall be the responsibility of ENGINEER, at no additional cost to the CITY. In the event that ENGINEER fails to correct such damages, CITY is entitled to utilize CITY forces or other labor to repair the damage; any costs incurred by CITY for such work shall be deducted from the monies due to ENGINEER.

ARTICLE VIII - RECORDS AND RETENTION

A. All surveys, studies, proposals, applications, drawings, plans, specifications and other documents, including those in electronic form, prepared by ENGINEER and its ENGINEERs, subcontractors, agents, representatives, and/or employees in connection with this AGREEMENT ("PROJECT DOCUMENTS") are intended for the use and benefit of CITY. ENGINEER and its ENGINEERs, subcontractors, agents, representatives, and/or employees shall be deemed the authors of their respective part of the PROJECT DOCUMENTS. Notwithstanding anything to the contrary, CITY shall own, have, and retain all rights, title and interest in and to all PROJECT DOCUMENTS, whether in draft form or final form, which are produced at CITY's request or otherwise produced from ENGINEER's performance of the work described herein for CITY. The CITY's ownership of PROJECT DOCUMENTS shall not apply to ENGINEER's proprietary standard details that were developed by the ENGINEER prior to the commencement of this PROJECT.

B. CITY shall have full authority to reuse, reproduce, publish, disclose and distribute PROJECT DOCUMENTS, as needed, according to Arkansas State Law.

C. ENGINEER shall, upon completion of the services and full payment for the ENGINEER'S services by the CITY, or earlier termination and appropriate compensation as provided by this AGREEMENT, provide the CITY with all PROJECT DOCUMENTS prepared by ENGINEER pursuant to this AGREEMENT in formats requested by the CITY.

D. All instruments of service (including plans, specifications, drawings, reports, designs, computations, computer programs, estimates, surveys, other data or work items, etc.) prepared under this AGREEMENT shall be submitted for approval to the CITY. All instruments of service shall be professionally sealed in accordance to applicable laws or at CITY's request.

E. Acceptance and approval of the PROJECT DOCUMENTS by the CITY shall not constitute nor be deemed a release of the responsibility and liability of ENGINEER, its employees, associates, agents and ENGINEERs for the accuracy or competency of their designs, working drawings and specifications, or other documents and work; nor shall such approval be deemed to be an assumption of such responsibility by the CITY for any defect in the designs, working drawings and specifications, or other documents prepared by ENGINEER, its employees, contractor, agents and ENGINEERs.

F. ENGINEER will retain the PROJECT DOCUMENTS for a period of three years following project completion. During this three year period, any requests for document recovery and reproduction will be assessed a fee in accordance with ENGINEER's FEES.

ARTICLE IX - SAFETY

A. CITY agrees to inform ENGINEER of any applicable site safety procedures and regulations known to CITY as well as any special safety concerns or dangerous conditions at the site of which the CITY is aware, which ENGINEER shall communicate to its employees. ENGINEER and its employees shall adhere to such procedures and regulations once notice has been given by the CITY.

B. Unless specifically provided in the SCOPE, ENGINEER shall not have any responsibility for overall job safety at the site. If in the ENGINEER's opinion, its field personnel are unable to access required locations or perform required services in conformance with applicable safety standards, ENGINEER may immediately suspend performance until such safety standards can be attained.

C. ENGINEER agrees to indemnify and hold harmless the CITY for any safety conditions that may arise out of ENGINEER's performance of this AGREEMENT.

ARTICLE X - TERMINATION

A. CITY may suspend or terminate this AGREEMENT for cause or without cause at any time by giving written notice to ENGINEER. In the event suspension or termination is without cause, payment to ENGINEER, in accordance with the terms of this AGREEEMENT, will be made on the basis of services reasonably determined by the CITY to be satisfactorily performed to the date of suspension or termination. Such payment will be due upon delivery of all instruments of service to CITY.

B. Should the CITY require a modification of this AGREEMENT with the ENGINEER, and in the event the CITY and ENGINEER fail to agree upon a modification to this AGREEMENT, the CITY shall have the option of terminating this AGREEMENT and the ENGINEER's services hereunder at no additional cost other than the payment to ENGINEER, in accordance with the terms of this AAGREEMENT, for the services reasonably determined by the CITY to be properly performed by ENGINEER prior to such termination date.

C. If, for whatever adequate funding is not made available by CITY to support or justify continuation of the level of services to be provided by ENGINEER under this AGREEMENT, CITY may terminate or reduce the amount of services to be provided by ENGINEER under this AGREEMENT. In such event, CITY will notify ENGINEER in writing at least thirty (30) days in advance of such termination or reduction of services for lack of funds.

D. In no event shall the CITY pay to ENGINEER fees for termination outside of payment for services reasonably determined by the City to be properly performed prior to termination.

ARTICLE XI - INDEMNIFICATION

A. For purposes of this AGREEMENT, ENGINEER agrees to indemnify, hold harmless the CITY, its officers and employees from any loss, damage, liability or expense, of any nature whatsoever to the extent caused by the negligence, willful misconduct, or other actionable fault of ENGINEER, its affiliates, subsidiaries, employees, agents, assignees, and subcontractors and their respective employees and agents. ENGINEER is not required hereunder to defend the CITY, its officers, appointees, employees, or agents from assertions that they were negligent, nor to indemnify and hold them harmless from liability based on the CITY's negligence

B. Nothing contained herein shall waive any governmental immunity CITY may be entitled to by law.

C. This provision shall survive the termination of this AGREEMENT.

ARTICLE XII - CONTINGENCY CLAUSE

A. The CITY may add a contingency amount to the contract to cover additional services as described in APPENDIX B. Any use of such contingency funds for additional services shall be executed as an AMENDMENT to this AGREEMENT.

B. The Contingency shall in no manner substitute for an official AMENDMENT.

ARTICLE XIII - RELATIONSHIP OF THE PARTIES

It is understood and agreed by and between the parties that the ENGINEER, in satisfying the conditions of this AGREEMENT, is acting independently, and that the CITY assumes no responsibility or liabilities to any third party in connection with ENGINEER's actions. All services to be performed by the ENGINEER pursuant to this AGREEMENT shall be in the capacity of an Independent Contractor, and not as an agent or employee of CITY. The ENGINEER shall supervise the performance of its services and shall be entitled to control the manner and means by which its services are to be performed, subject to the terms of this AGREEMENT. There is no intended third party beneficiary to the AGREEMENT and nothing contained herein shall create a contractual relationship with, or any rights in favor of, any third party.

ARTICLE XIV - DISPUTE RESOLUTION

A. CITY and ENGINEER agree that disputes relative to the services will first be addressed by negotiations between the Parties. If direct negotiations fail to resolve the dispute, the Party initiating the claim that is the basis for dispute may take such steps as it deems necessary to protect its interests; provided, however, that notwithstanding any such dispute, ENGINEER will proceed with the services as per this AGREEMENT as if no dispute existed, and CITY will continue to make payment for ENGINEER's completed services; and provided further that no dispute will be submitted to arbitration without both Parties' express written consent.

ARTICLE XV - OPINIONS OF PROBABLE COST

A. Since the ENGINEER has no control over the cost of labor, materials, equipment or services furnished by others, or over methods of determining prices, or over competitive bidding or market conditions, the ENGINEER's estimates of PROJECT costs and construction costs provided for herein are to be made on the basis of the ENGINEER's experience and qualifications and represent the ENGINEER's judgement in accordance with the "Standard of Care". The ENGINEER cannot and does not guarantee that proposals, bids or actual PROJECT or construction costs will not vary from estimates prepared by the ENGINEER.

B. The CITY understands that the construction cost estimates developed by the ENGINEER do not establish a limit for construction contract amount. If the actual amount of the low construction bid exceeds the construction budget established by the CITY, the ENGINEER will not be required to re-design the PROJECT or any part thereof without additional compensation.

ARTICLE XVI - APPLICABLE LAWS

ENGINEER shall comply with all Federal, State, Local laws, ordinances, resolutions, specifications, regulations and all other laws or regulations relating or applicable to service to be performed under this AGREEMENT. Interpretation of this AGREEMENT and disputes arising out of or related to this AGREEMENT will be subject to and governed by the laws of the State of Arkansas. Jurisdiction and venue for any suit arising out of or related to this AGREEMENT will be in the District Court of Benton County, Arkansas,

ARTICLE XVII - PRECEDENCE

This AGREEMENT shall take precedence over any inconsistent of contradictory provisions contained in any proposal, contract, purchase order, requisition, notice to proceed, or any other like document regarding the PROJECT or ENGINEER's services.

ARTICLE XVIII - SEVERABILITY

A. In the event that one or more provisions contained herein shall, for any reason, be deemed invalid, illegal, void or unenforceable, in whole or in part, the remaining provisions hereof shall remain in full force and effect.

B. In the event that any provision hereof is in conflict with any statutory provision of the State of Arkansas, said provision, which may be in conflict therewith, shall be deemed inoperative, null and void insofar as it may be in conflict therewith, and shall be deemed modified to conform to such statutory provisions; provided, however, that the remaining provisions of this AGREEMENT will be unaffected and will continue to be valid and enforceable.

ARTICLE XIX - SURVIVAL OF OBLIGATIONS

The obligations of the Parties contained in this AGREEMENT, which by their nature survive after the term of the AGREEMENT, shall survive the termination or expiration of this AGREEMENT and continue indefinitely or as otherwise provided by this AGREEMENT.

ARTICLE XIX – ENTIRE AGREEMENT

This AGREEMENT, including all documents and Appendices included by reference herein, constitutes the entire agreement between the PARTIES and supersedes all prior agreements, whether oral or written, covering the same subject matter. This AGREEMENT may not be modified or amended except in writing, mutually agreed upon and accepted by both PARTIES to this AGREEMENT.

The cost of this AGREEMENT including all reimbursable expenses as described in the FEES AND SCHEDULE, **shall not exceed** _____Five Hundred Thirty-Five Thousand Dollars and zero cents ($535,000.00)_____, unless otherwise approved by the CITY through an official AMENDMENT agreed and executed by CITY and ENGINEER.

IN WITNESS THEREOF, the CITY and ENGINEER have executed this AGREEMENT, the EFFECTIVE DATE of which is indicated on page 1 of this AGREEMENT.

CITY OF BENTONVILLE	**CRAFTON, TULL & ASSOC., INC.**
CITY	ENGINEER
	[redacted] Digitally signed by Bill Burnett, P.E., Vice President DN: C=US, E=bill.burnett@craftontull.com, O=Crafton Tull, OU=Infrastructure, CN="Bill Burnett, P.E., Vice President" Reason: I agree to the terms defined by the placement of my signature on this document Date: 2021.06.04 14:55:45-05'00'
BY	BY
MAYOR	**VICE PRESIDENT**
TITLE	TITLE
DATE SIGNED	DATE SIGNED

APPENDIX A
PROJECT DESCRIPTION

BASIC PROJECT INFORMATION:

CONSTRUCT IMPROVMENTS TO SE MOBERLY LANE BETWEEN SE 14TH STREET AND SE 8TH STREET TO A FIVE-LANE ROAD WITH PEDESTRIAN / BICYCLE FACILITIES THAT ARE CONSISTENT WITH THE CITY OF BENTONVILLE'S BICYCLE AND PEDESTRIAN MASTER PLAN.

APPENDIX B

SCOPE OF SERVICES

SERVICES BY THE CITY

- Furnish required information and approvals and perform responsibilities and activities in a timely manner to facilitate orderly progress of the work.
- Provide criteria and information as to the requirements for the PROJECT, including design objectives and constraints, right-of-way, capacity and performance requirements, and any budgetary limitations.
- Furnish copies of design and construction standards that the CITY will require to be included in the drawings and specifications.
- Assist the ENGINEER by placing at their disposal all available information pertinent to the PROJECT, including previous reports and other data relative to design or construction of the PROJECT.
- Arrange for access to public and private property as required for the PROJECT.
- Obtain the necessary lands, easements and rights-of-way for the PROJECT.
- Reimburse all plan review, advertising costs, permits and approvals in connection with the PROJECT.
- Pay the ENGINEER is accordance with the terms of the AGREEMENT.

If the CITY observes or otherwise becomes aware of any fault or defect in the PROJECT, the CITY shall give prompt written notice thereof to the ENGINEER.

SERVICES BY THE ENGINEER

- Meet all requirements of the AGREEMENT including any AMENDMENTS.
- Produce all documents and services needed for the PROJECT, including but not limited to:

  Topographical surveys, Right-of-Way Surveys, Utility Surveys and Coordination, Traffic Study, Geotechnical Investigations, Environmental Surveys, Permitting, Major Drainage Study, Conceptual Design Phase (30%), Preliminary Design Phase (60%), Final Design Phase (90%), Public Meetings, Bidding Services, Construction Support Services, Project Management Services, Project Closeout.
- Project Management services for the entire life of the project that align with the Project Management Institute Project Management Book of Knowledge Latest Edition.
- All Design and Construction shall conform to Federal, State and Local regulations.
- Coordinate PROJECT with Franchise Utility Companies to assure adequate space for all facilities and timely relocations.
- Coordinate and Furnish approvals and permits from all Regulatory Agencies having jurisdiction over the PROJECT.
- Provide all services relevant to City of Bentonville Plan Review procedures.
- Create and provide all documents for property acquisitions and assist with any layout or staking required.
- Coordinate and facilitate meetings with CITY and Agencies for plan review, project coordination and right-of-way.
- Subcontracting of services by the ENGINEER shall have prior approval of the CITY.

APPENDIX C

SCHEDULE OF FEES AND SERVICES, KEY MILESTONES, AND DURATIONS FOR MAJOR TASKS

Tasks performed shall be paid for at an amount equal to the cumulative hours charged to the Project by each class of Engineer's employees times standard hourly rates for each applicable billing class. Major tasks with estimated fees are shown below. Overruns and underruns associated with each task may offset one another as long as the overall fee is not exceeded.

TASK	**DURATION***	**ESTIMATED FEE**
Topographic & Land Surveying	1 month	$55,000
30% - Conceptual Design	2 months	$45,000
60% - Preliminary Design	4 months	$105,000
90% - Final Design	3 months	$75,000
ROW Acquisition	6 months	$20,000
Utility Relocation	10 months	$15,000
Bid Letting / Award	1 month	$15,000
Construction Administration	8 months	$160,000
Subconsultants (Geotech., Constr. Materials Testing, Title Co.)		$40,000
Reimbursables		$5,000
NOT-TO-EXCEED FEE TOTAL		**$535,000**

* Duration does not include review times for government agencies outside of our control.

Items Excluded from above fee schedule that can be added by contract amendment:

- Wetland determinations
- Traffic study (not required)
- Retaining wall design
- Landscaping design
- Offsite utility or street extensions

RESOLUTION NO. _____

A RESOLUTION AUTHORIZING THE MAYOR TO ENTER INTO AN AGREEMENT WITH CRAFTON, TULL & ASSOCIATES, INC., FOR ENGINEERING AND PROJECT SERVICES FOR MOBERLY LN - SE 14TH TO SE 8TH.

NOW, THEREFORE, BE IT RESOLVED BY THE CITY COUNCIL FOR THE CITY OF BENTONVILLE, ARKANSAS.

Section 1: That the Mayor be and is hereby authorized to enter into an agreement with Crafton, Tull & Associates, Inc. for engineering and project services for MOBERLY LN - SE 14TH TO SE 8TH in an amount of $535,000.00 as set forth in the Professional Services Agreement attached hereto as Exhibit "A".

Section 2: This resolution shall be in full force and effect from and after the date of its passage.

PASSED and APPROVED this _____ day of _____, 2021.

APPROVED:

_____
MAYOR

ATTEST:

_____
CITY CLERK

Agenda Item Form

Date of City Council Meeting	**6/22/2021**
Department	**Engineering**
Submitted by	**Dan Weese**
Phone	**(479) 254-2024**

Item Type: (*Check Applicable Item Type*)

☐ Budget Adjustment	☐ Change Order	☐ Informational	☐ Ordinance	☑ Resolution	☐ Bid Award

Recommendation/Suggested Action *(Enter recommendation in space below):*

Resolution allowing the Mayor to enter into an amended agreement with Morrison Shipley Engineers for engineering and project services for Bentonville Sidewalk Improvements. The cost of this amendment will be $64,610.00.

Estimated Cost	**$64,610.00**
Is this Item Budgeted?	☐ Yes ☑ No

If no, please explain how item will be funded *(briefly explain in space below)* **:**

This project will be funded from Engineering Departments capital budget.

Memorandum

To: Mayor and City Council

From: Dan Weese, City Engineer

Date: Wednesday, June 9, 2021

Re: Morrison Shipley Engineers Amended Agreement for Bentonville Sidewalk Impvts.

Project Description:

Bentonville Sidewalk Improvements is a collection of sidewalks around the city that was developed by the Trails and Active Transportation Committee and consists of the following locations:

Project Name	Project Number	Approx. LF
• NE Cub Circle:	PIIP21-00006	510 LF
• SW "D" Street:	PIIP21-0007	2570 LF
• SW 20th Street:	PIIP21-0008	1120 LF
• SE "C" Street:	PIIP21-0009	50 LF
• SW Regional Airport Boulevard:	PIIP-21-0010	200 LF

Morrison Shipley Engineers (MSE) is currently under contract to perform design services for all of these sidewalk locations. This amendment will add additional design, bid, and construction phase services. The cost of this amendment will be $64,610.00 and will come from the Engineering Department capital account.

Staff requests approval of a resolution allowing the Mayor to enter into an amended agreement with MSE.

Please contact me with any questions or concerns regarding this amendment or the project as a whole. My telephone number is (479) 254-2024 or I can be reached via email at dweese@bentonvillear.com

MORRISON SHIPLEY

June 7, 2021

Mr. Bryan Wick, CPESC, CFM
Engineering Project Manager
305 SW A Street
Bentonville, AR 72712
(479) 271-3168

RE: ***Contract Amendment***
2019 Sidewalk Improvements
City of Bentonville, Arkansas

Dear Bryan:

As we have discussed the scope of the project has changed over the course of the past three years because of the changed site conditions along SW 20th Street and SW "D" Street, and the desire of the City for Morrison Shipley to assume management of the bidding, post-bid and construction phases. In addition.

This Proposal is an amendment to the previously executed agreement for professional services. It is our understanding that you wish for MSE to provide these specific services in regard to this project:

- Resurvey for Changed Conditions SW "D" Street and SW 20th Street
- Redesign for Changed Conditions SW "D" Street and SW 20th Street
- Submission and Approval of Redesigned Improvements
- Production of Bid Documents and Plans for Changed Conditions
- Bid Opening and Administration
- Post-Bid Document Preparation
- Pre-Construction Meetings and Document Distribution
- Coordination with Contractor(s) on Construction Issues
- Construction Observation
- Preparation and Distribution of Weekly Project Summary Reports
- Preparation and Submittal of Pay Applications
- Preparation and Submittal of Change Orders

2407 SE COTTONWOOD ST STE 1
BENTONVILLE AR 72712
479 273 2209

- Inspection and Administration of Erosion Control Plans
- Preparation of Project Closeout Documents

PROJECT SCOPE:

The various locations/sections for the sidewalk improvements have been broken out as separate projects for the purposes of City management as:

- NE Cub Circle: PIIP21-00006
- SW "D" Street: PIIP21-0007
- SW 20th Street: PIIP21-0008
- SE "C" Street: PIIP21-0009
- SW Regional Airport Boulevard: PIIP-21-0010

FEES:

Morrison-Shipley will be paid the following Lump Sum Fees for these additional services:

Amended Services	
Construction Documents:	$ 19,040.00
Bidding Phase:	$ 8,020.00*
Construction Management & Observation:	$ 37,550.00
	$ 64,610.00 Total Additional Services

*Adjusted for remaining original contract amounts.

Fee Conditions:

1. The revised Maximum fee for the scope of this project is **$104,510.00** based on the schedule of fees above and the original proposal. Reimbursable Expenses shall be charged at our direct cost with zero (0) percent markup.

2. Services not listed in this Proposal or any changes to the project scope that are requested by the City of Bentonville, or other parties, after we have started our work will be billed as ADDITIONAL SERVICES in accordance with our fee schedule that is current when the work is performed.

3. For project delays that are in excess of 120 days, which are beyond our control, we reserve the right to request additional compensation.

4. Invoices for our services will be issued on or about the 1st day of each month for work completed to date less previous billings. Payment terms shall be Net 30 days from the invoice date.

EXCLUSIONS:

Morrison-Shipley has NOT included the following items in this proposal:

1. Outside agency review submittals and/or fees.
2. Storm system design.
3. Newspaper advertising fees.
4. Preparation of SW3P. However, MSE will provide oversight and administration of erosion control plans as approved during construction, including post-rain inspections, mitigation work, and review of contractor's compliance, among others.
5. Construction Staking.

If this Proposal is acceptable, please have it signed below and return a copy to me.

Please call me if there are any questions I can answer. Again, thank you for placing your confidence in Morrison-Shipley to complete this project!

Sincerely,
Morrison-Shipley Engineers, Inc.

[redacted]

Douglas C. Melton, Jr., P.G., P.E.
Senior Project Manager

Terms of this Proposal agreed to by:

Honorable Stephanie Orman
Mayor

Date:_____

Attachments: Terms and Conditions
Schedule of Hourly Billing Rates

RESOLUTION NO. _____

A RESOLUTION AUTHORIZING THE MAYOR TO ENTER INTO AN AMENDED AGREEMENT WITH MORRISON SHIPLEY ENGINEERS FOR ENGINEERING AND PROJECT SERVICES FOR BENTONVILLE SIDEWALK IMPROVEMENTS.

NOW, THEREFORE, BE IT RESOLVED BY THE CITY COUNCIL FOR THE CITY OF BENTONVILLE, ARKANSAS.

Section 1: That the Mayor be and is hereby authorized to enter into an amended agreement with Morrison Shipley Engineers for engineering and project services for Bentonville Sidewalk Improvements in an amount of $64,610.00 as set forth in the Professional Services Agreement attached hereto as Exhibit "A".

Section 2: This resolution shall be in full force and effect from and after the date of its passage.

PASSED and APPROVED this _____ day of _____, 2021.

APPROVED:

_____
MAYOR

ATTEST:

_____
CITY CLERK

Agenda Item Form

Date of City Council Meeting	**6/22/2021**
Department	**Engineering**
Submitted by	**Dan Weese**
Phone	**(479) 254-2024**

Item Type: (*Check Applicable Item Type*)

☑ Budget Adjustment	☐ Change Order	☐ Informational	☐ Ordinance	☐ Resolution	☐ Bid Award

Recommendation/Suggested Action *(Enter recommendation in space below)*:

Budget Adjustment to pay for the amended agreement with Morrison Shipley Engineers for engineering and project services for Bentonville Sidewalk Improvements.

Estimated Cost	**$64,610.00**
Is this Item Budgeted?	☐ Yes ☑ No

If no, please explain how item will be funded *(briefly explain in space below)*:

This project will be funded by reallocating monies from improvements other to the sidewalks account.

Budget Adjustment Request

Date of City Council Meeting	**6/22/2021**
Department	**Engineering**
Submitted by	**Dan Weese**
Phone	**(479) 254-2024**

Purpose of Budget Adjustment *(Enter purpose in space below):*

Budget Adjustment to pay for Amendment 1 to Morrison Shipley Agreement to provide additional engineering and construction services for the Bentonville Sidewalk Improvement project.

General Ledger Account Information*				
Org (Department)	**Object**	**Account Description**	**Revenue + (-)**	**Expense + (-)**
101630	47384	Sidewalk-Street		$ 64,610.00
101630	47390	Improvements Other		$ (64,610.00)
		Totals	$ -	$ -
		Net Impact on Fund Balance	$	-

*Final Account Number will be determined by Accounting Department after approval and purchase

Agenda Item Form

Date of City Council Meeting	**6/22/2021**
Department	**Engineering Department**
Submitted by	**Dan Weese**
Phone	**(479) 254-2024**

Item Type: (*Check Applicable Item Type*)

☐ Budget Adjustment	☑ Change Order	☐ Informational	☐ Ordinance	☐ Resolution	☐ Bid Award

Recommendation/Suggested Action *(Enter recommendation in space below)*:

Staff recommends that the Mayor and City Council approve a reconciliation change order for the NW 3rd Street and Walton Intersection Improvements project. The final contract amount is 33,142.19 less than the currently contracted amount of $654,598.25. DECCO Contractors-Paving, Inc. is also requesting additional contract time due to longer material lead times as a result of the COVID pandemic. The final contract amount after this reconciliation change order will be $621,456.06.

Staff recommends that the May	**($33,142)**
Is this Item Budgeted?	☑ Yes ☐ No
If no, please explain how item will be funded *(briefly explain in space below)* **:**	

Memorandum

To: Mayor and City Council

From: Dan Weese, City Engineer

Date: Thursday, June 10, 2021

Re: Reconciliation Change Order for NW 3rd Street & Walton Intersection Improvements

---

NW 3rd Street & Walton Intersection Improvements project is now complete. A reconciliation change order is needed to adjust the final values of the contract.

Original Contract Amount -	$654,598.25
Change Order #1 -	$0.00
Change Order #2 -	$0.00
Reconciliation Change Order -	($33,142.19)
New Contract Amount -	$621,456.06

Staff recommends that the Mayor and City Council approve of the reconciliation change order to finalize the NW 3rd Street & Walton Intersection Improvement project.

Please contact me with any questions or concerns regarding the project. My telephone number is (479) 254-2024 or I can be reached via email at dweese@bentonvillear.com.

GARVER

Construction Contract Change Order

Project: Walton Blvd. and NW 3rd Street Intersection Garver Job No. 17047100	**Change Order No.** 3 **Date Prepared: 05/26/2021**
Owner: City of Bentonville 117 W. Central Ave Bentonville, AR, 72712	**Contractor:** Decco Contractors-Paving, Inc. P.O. Box 580 Rogers, AR 72757

Description of Work Included in Contract

The project includes, but is not limited to, the installation of traffic signalization at the intersection of N. Walton Boulevard and NW 3rd Street and the widening of NW 3rd Street on the east side of the intersection for the installation of a right turn lane and through/left lane as shown on the plans and indicated in the specifications.

Changes and Reasons Ordered (List Individual Changes as: A, B, C, D, etc.)

A. Reconciliation of all contract items- See attached documentation.

Attachments: Change Order Proposal, Revised Plan Sheets

Contract Changes	Bid Item No.	Bid Item Description	Original Estimated Quantity	Unit of Measure	Previous Unit Price	Revised Estimated Quantity	Revised Unit Price	Previous Estimated Cost	Revised Estimated Cost
A.	CO3.01	Reconciliation Change Order	0	LS	$0.00	1	-$33,142.19	$0.00	($33,142.19)
								$0.00	$0.00
								$0.00	$0.00
								$0.00	$0.00
								$0.00	$0.00
								$0.00	$0.00
							Summation of Cost	$0.00	($33,142.19)
							Net Cost for this Change Order		($33,142.19)

Estimated Project Cost	Estimated Project Cost
Original Contract Amount	$654,598.25
Previously Approved Changes	$0.00
This Change Order	($33,142.19)
New Contract Amount	$621,456.06

Time Change	
Original Contract Start Date	June 16, 2020
Previous Contract Time (calendar days)	308
Additional Calendar Days granted by this Change Order	0
New Contract Time (calendar days)	308
New Estimated Construction Completion Date	April 20, 2021

THIS AGREEMENT IS SUBJECT TO ALL ORIGINAL CONTRACT PROVISIONS AND PREVIOUS CHANGE ORDERS

ISSUED FOR REASONS INDICATED ABOVE **Engineer: Garver**	[redacted]	**Project Manager**	05/26/2021
	Engineer's Signature	Title	Date
ACCEPTED BY CONTRACTOR	[redacted]	Project Manager	5/27/21
	Contractor's Signature	Title	Date
APPROVED BY OWNER			
	Owner's Signature	Title	Date

RECONCILIATION
WALTON BLVD. AND NW 3RD STREET INTERSECTION

INVOICE NUMBER: 8
TO: 05/26/21

BID ITEM NUMBER	BID ITEM DESCRIPTION	UNIT	CURRENT CONTRACT QUANTITY	CONTRACT UNIT PRICE	ORIGINAL CONTRACT QUANTITY	QUANTITY TO-DATE	AMOUNT TO-DATE	DEVIATION FROM CONTRACT (UNITS)	(AMOUNT)	CONTRACT AMOUNT
1	4" Portland Cement Concrete Base	SY	146.00	$ 13.75	146.00	146.00	$ 2,007.50	0.00	$ -	$ 2,007.50
2	Site Preparation	LS	1.00	$ 6,370.89	1.00	1.00	$ 6,370.89	0.00	$ -	$ 6,370.89
3	Unclassified Excavation	CY	130.00	$ 46.29	130.00	20.00	$ 925.80	(110.00)	$ (5,091.90)	$ 6,017.70
4	Undercut Excavation	CY	50.00	$ 102.10	50.00	0.00	$ -	(50.00)	$ (5,105.00)	$ 5,105.00
5	Trench and Excavation Safety System	LS	1.00	$ 3,000.00	1.00	1.00	$ 3,000.00	0.00	$ -	$ 3,000.00
6	Maintenance of Traffic	LS	1.00	$ 3,579.75	1.00	1.00	$ 3,579.75	0.00	$ -	$ 3,579.75
7	Concrete Ditch Paving	SY	5.30	$ 209.00	5.30	0.00	$ -	(5.30)	$ (1,107.70)	$ 1,107.70
8	24" Reinforced Concrete Pipe, Class III	LF	205.00	$ 139.03	205.00	156.00	$ 21,688.68	(49.00)	$ (6,812.47)	$ 28,501.15
9	Sidewalk Underdrain	EA	1.00	$ 1,100.00	1.00	1.00	$ 1,100.00	0.00	$ -	$ 1,100.00
10	4' Curb Inlet (Type MO)	EA	3.00	$ 1,286.67	3.00	2.00	$ 2,573.34	(1.00)	$ (1,286.67)	$ 3,860.01
11	4' Inlet Extension	EA	3.00	$ 1,180.00	3.00	3.00	$ 3,540.00	0.00	$ -	$ 3,540.00
12	8' Inlet Extension	EA	1.00	$ 1,760.00	1.00	1.00	$ 1,760.00	0.00	$ -	$ 1,760.00
13	Concrete Pavement Repair	SY	21.00	$ 148.50	21.00	31.00	$ 4,603.50	10.00	$ 1,485.00	$ 3,118.50
14	Seeding	ACRE	0.50	$ 2,640.00	0.50	0.50	$ 1,320.00	0.00	$ -	$ 1,320.00
15	Temporary Erosion Control	LS	1.00	$ 8,640.68	1.00	1.00	$ 8,640.68	0.00	$ -	$ 8,640.68
16	Sodding	SY	635.00	$ 7.73	635.00	635.00	$ 4,908.55	0.00	$ -	$ 4,908.55
17	4" Thick Sidewalk	SY	60.00	$ 124.84	60.00	60.00	$ 7,490.40	0.00	$ -	$ 7,490.40
18	Retaining Wall Integral with 6" Thick Sidewalk	LF	17.00	$ 317.07	17.00	17.00	$ 5,390.19	0.00	$ -	$ 5,390.19
19	Concrete Curb and Gutter	LF	618.00	$ 23.48	618.00	626.00	$ 14,698.48	8.00	$ 187.84	$ 14,510.64
20	Roadway Construction Control	LS	1.00	$ 15,000.00	1.00	1.00	$ 15,000.00	0.00	$ -	$ 15,000.00
21	Cold Milling Asphalt Pavement	SY	1,014.00	$ 4.79	1,014.00	1,014.00	$ 4,857.06	0.00	$ -	$ 4,857.06
22	6" Aggregate Base Course (Class 7)	SY	334.00	$ 11.78	334.00	314.00	$ 3,698.92	(20.00)	$ (235.60)	$ 3,934.52
23	ACHM Surface Course (PG70-22)	TON	140.00	$ 204.97	140.00	128.00	$ 26,236.16	(12.00)	$ (2,459.64)	$ 28,695.80
24	ACHM Surface Leveling Course (PG70-22)	TON	60.00	$ 209.36	60.00	60.00	$ 12,561.60	0.00	$ -	$ 12,561.60
25	Concrete Driveway	SY	90.00	$ 141.69	90.00	55.00	$ 7,792.95	(35.00)	$ (4,959.15)	$ 12,752.10
26	Asphalt Driveway	SY	44.00	$ 88.60	44.00	44.00	$ 3,898.40	0.00	$ -	$ 3,898.40
27	Valve Box Replacement	EA	1.00	$ 470.81	1.00	1.00	$ 470.81	0.00	$ -	$ 470.81
28	2" Sewer Force Main	LF	200.00	$ 20.31	200.00	0.00	$ -	(200.00)	$ (4,062.00)	$ 4,062.00
29	Thermoplastic Pavement Marking - 6" Yellow	LF	1,482.00	$ 4.32	1,482.00	1,482.00	$ 6,402.24	0.00	$ -	$ 6,402.24
30	Thermoplastic Pavement Marking - 6" White	LF	450.00	$ 4.32	450.00	450.00	$ 1,944.00	0.00	$ -	$ 1,944.00
31	Thermoplastic Pavement Marking - 12" White	LF	502.00	$ 27.00	502.00	502.00	$ 13,554.00	0.00	$ -	$ 13,554.00
32	Thermoplastic Pavement Marking (Arrows)	EA	12.00	$ 432.00	12.00	12.00	$ 5,184.00	0.00	$ -	$ 5,184.00
33	Thermoplastic Pavement Marking (Words)	EA	4.00	$ 486.00	4.00	4.00	$ 1,944.00	0.00	$ -	$ 1,944.00
34	Salvage, Maintain, and Reinstall Sign with New Post	EA	1.00	$ 324.00	1.00	1.00	$ 324.00	0.00	$ -	$ 324.00
35	Advance Warning Sign	EA	4.00	$ 385.00	4.00	4.00	$ 1,540.00	0.00	$ -	$ 1,540.00
36	System Local Controller-Fiber (8 Phases)	EA	1.00	$ 28,188.60	1.00	1.00	$ 28,188.60	0.00	$ -	$ 28,188.60
37	Traffic Signal Controller (Modification)	EA	1.00	$ 3,850.00	1.00	1.00	$ 3,850.00	0.00	$ -	$ 3,850.00
38	Ethernet Switch	EA	2.00	$ 1,947.00	2.00	2.00	$ 3,894.00	0.00	$ -	$ 3,894.00
39	GPS Preemption System	EA	1.00	$ 12,430.00	1.00	1.00	$ 12,430.00	0.00	$ -	$ 12,430.00
40	Battery Backup System	EA	1.00	$ 9,366.50	1.00	1.00	$ 9,366.50	0.00	$ -	$ 9,366.50
41	WIC Fiber Enclosure	EA	2.00	$ 605.00	2.00	2.00	$ 1,210.00	0.00	$ -	$ 1,210.00
42	Traffic Signal Head, LED, (3 Section, 1 Way)	EA	4.00	$ 832.26	4.00	4.00	$ 3,329.04	0.00	$ -	$ 3,329.04
43	Traffic Signal Head, LED, (4 Section, 1 Way)	EA	4.00	$ 938.52	4.00	4.00	$ 3,754.08	0.00	$ -	$ 3,754.08
44	Traffic Signal Head, LED, (5 Section, 1 Way)	EA	2.00	$ 1,072.50	2.00	2.00	$ 2,145.00	0.00	$ -	$ 2,145.00
45	Central Control Unit	EA	1.00	$ 11,550.00	1.00	1.00	$ 11,550.00	0.00	$ -	$ 11,550.00
46	Pole Mounted Assembly	EA	6.00	$ 1,140.70	6.00	6.00	$ 6,844.20	0.00	$ -	$ 6,844.20
47	Infrared Programming Device	EA	1.00	$ 440.00	1.00	1.00	$ 440.00	0.00	$ -	$ 440.00
48	Countdown Pedestrian Signal Head, LED	EA	6.00	$ 742.50	6.00	6.00	$ 4,455.00	0.00	$ -	$ 4,455.00
49	Traffic Signal Cable (5C/14 A.W.G.)	LF	1,401.00	$ 1.93	1,401.00	1,849.01	$ 3,568.59	448.01	$ 864.66	$ 2,703.93
50	Traffic Signal Cable (7C/14 A.W.G.)	LF	374.00	$ 2.20	374.00	409.00	$ 899.80	35.00	$ 77.00	$ 822.80
51	Traffic Signal Cable (20C/14 A.W.G.)	LF	453.00	$ 3.85	453.00	688.00	$ 2,648.80	235.00	$ 904.75	$ 1,744.05
52	Electrical Conductors-In-Conduit (1C/8 A.W.G., E.G.C.)	LF	519.00	$ 1.65	519.00	647.00	$ 1,067.55	128.00	$ 211.20	$ 856.35
53	Electrical Conductors-In-Conduit (1C/12 A.W.G., E.G.C.)	LF	100.00	$ 0.83	100.00	114.00	$ 94.62	14.00	$ 11.62	$ 83.00
54	Electrical Conductors-In-Conduit (2C/6 A.W.G.)	LF	23.00	$ 2.75	23.00	21.00	$ 57.75	(2.00)	$ (5.50)	$ 63.25

RECONCILIATION
WALTON BLVD. AND NW 3RD STREET INTERSECTION

INVOICE NUMBER: 8
TO: 05/26/21

BID ITEM NUMBER	BID ITEM DESCRIPTION	UNIT	CURRENT CONTRACT QUANTITY	CONTRACT UNIT PRICE	ORIGINAL CONTRACT QUANTITY	QUANTITY TO-DATE	AMOUNT TO-DATE	DEVIATION FROM CONTRACT (UNITS)	DEVIATION FROM CONTRACT (AMOUNT)	CONTRACT AMOUNT
55	Electrical Conductors for Luminaires	LF	417.00	$ 1.93	417.00	588.00	$ 1,134.84	171.00	$ 330.03	$ 804.81
56	Communication Cable, Fiber (12 SMF)	LF	860.00	$ 13.20	860.00	842.00	$ 11,114.40	(18.00)	$ (237.60)	$ 11,352.00
57	Galvanized Steel Conduit (2")	LF	122.00	$ 33.00	122.00	0.00	$ -	(122.00)	$ (4,026.00)	$ 4,026.00
58	Non-Metallic Conduit (2")	LF	195.00	$ 11.00	195.00	272.00	$ 2,992.00	77.00	$ 847.00	$ 2,145.00
59	Non-Metallic Conduit (3")	LF	453.00	$ 33.00	453.00	620.00	$ 20,460.00	167.00	$ 5,511.00	$ 14,949.00
60	3" NMC (HDPE)	LF	365.00	$ 33.00	365.00	484.50	$ 15,988.50	119.50	$ 3,943.50	$ 12,045.00
61	2" NMC (RISER)	LF	20.00	$ 11.00	20.00	20.00	$ 220.00	0.00	$ -	$ 220.00
62	Concrete Pull Box (Type 3)	EA	4.00	$ 825.00	4.00	4.00	$ 3,300.00	0.00	$ -	$ 3,300.00
63	Concrete Pull Box (Type 3 HD)	EA	6.00	$ 1,045.00	6.00	6.00	$ 6,270.00	0.00	$ -	$ 6,270.00
64	Pull Box For Fiber, DS-1609, 30"x48"x24"	EA	2.00	$ 385.00	2.00	2.00	$ 770.00	0.00	$ -	$ 770.00
65	Fiber Cabinet Base, DS-1611, 40"X44", Quazite #PB40441218B24 (Installation Only)	EA	1.00	$ 385.00	1.00	1.00	$ 385.00	0.00	$ -	$ 385.00
66	Traffic Signal Mast Arm and Pole with Foundation (34')	EA	2.00	$ 25,518.90	2.00	2.00	$ 51,037.80	0.00	$ -	$ 51,037.80
67	Traffic Signal Mast Arm and Pole with Foundation (40')	EA	1.00	$ 26,976.40	1.00	1.00	$ 26,976.40	0.00	$ -	$ 26,976.40
68	Traffic Signal Mast Arm and Pole with Foundation (42')	EA	1.00	$ 27,552.80	1.00	1.00	$ 27,552.80	0.00	$ -	$ 27,552.80
69	LED Luminaire Assembly	EA	2.00	$ 963.60	2.00	2.00	$ 1,927.20	0.00	$ -	$ 1,927.20
70	Traffic Signal Pedestal Pole with Foundation	EA	4.00	$ 4,104.00	4.00	4.00	$ 16,416.00	0.00	$ -	$ 16,416.00
71	Service Point Assembly (2 Circuits)	EA	1.00	$ 1,650.00	1.00	1.00	$ 1,650.00	0.00	$ -	$ 1,650.00
72	Video Detector Rack (16 Channel)	EA	2.00	$ 1,870.00	2.00	2.00	$ 3,740.00	0.00	$ -	$ 3,740.00
73	Video Detector (IP)	EA	7.00	$ 5,638.60	7.00	7.00	$ 39,470.20	0.00	$ -	$ 39,470.20
74	Video Cable (Exterior CAT 5E)	LF	1,017.00	$ 1.65	1,017.00	955.00	$ 1,575.75	(62.00)	$ (102.30)	$ 1,678.05
75	Video Monitor (CLR)	EA	1.00	$ 880.00	1.00	1.00	$ 880.00	0.00	$ -	$ 880.00
76	Central Control Unit (4 Channel)	EA	2.00	$ 11,550.00	2.00	2.00	$ 23,100.00	0.00	$ -	$ 23,100.00
77	Video Processor, Edge Card IP (2 Camera)	EA	5.00	$ 5,544.00	5.00	5.00	$ 27,720.00	0.00	$ -	$ 27,720.00
78R	Contingency	LS	1.00	$ 12,024.26	1.00	0.00	$ -	(1.00)	$ (12,024.26)	$ 12,024.26
CO1.01	Remove 24" Reinforced Concrete Pipe	LF	14.00	$ 260.25	0.00	14.00	$ 3,643.50	14.00	$ -	$ 3,643.50
CO1.02	23"x14" Reinforced Elliptical Concrete Pipe, Class IV	LF	50.00	$ 168.66	0.00	50.00	$ 8,433.00	50.00	$ -	$ 8,433.00
CO1.03	4' Curb Inlet with Extended Throat (Type MO)	EA	1.00	$ 5,720.00	0.00	1.00	$ 5,720.00	1.00	$ -	$ 5,720.00
CO1.04	Concrete Pad above Waterline	CY	0.44	$ 2,000.00	0.00	0.44	$ 880.00	0.44	$ -	$ 880.00
CO1.05	4' Junction Box (Type MO)	EA	1.00	$ 4,400.00	0.00	1.00	$ 4,400.00	1.00	$ -	$ 4,400.00
CO2.01	Removal and Replacement of Tactile Panel	LS	1.00	$ 4,769.51	0.00	1.00	$ 4,769.51	1.00	$ -	$ 4,769.51
CO2.02	Open Trench Cut for Signal Conduit	LS	1.00	$ 10,129.73	0.00	1.00	$ 10,129.73	1.00	$ -	$ 10,129.73
	TOTALS						621,456.06			654,598.25
							Difference from Contract:		(33,142.19)	

MONTHLY INVOICE PREPARED BY GARVER

PROJECT NAME:	Walton Blvd. and NW 3rd Street Intersection	INVOICE NUMBER:	8
		FROM:	05/26/21
OWNER:	City of Bentonville 117 W. Central Ave Bentonville, AR 72712	TO:	05/26/21
		GARVER PROJECT NUMBER:	17047100
CONTRACTOR:	Grant Garrett Excavating, Inc. P.O. Box 580 Rogers, AR 72757	CONTRACT COMPLETION DATE:	04/20/21
		DATE WORK BEGAN:	06/16/20
CONTRACT DATE:	April 27th, 2020	SUBSTANTIAL COMPLETION:	04/20/21

CONTRACT AMOUNT:	$	654,598.25	CONSTRUCTION TIME:		
ORIGINAL:	$	654,598.25	ALLOTTED:	308	Calendar Days
CHANGE ORDERS:	$	(33,142.19)	SUSPENDED:		Calendar Days
REVISED:	$	621,456.06	USED:	308	Calendar Days

100% of Contract Amount Used To-date

100% of Contract Time Used To-Date

Weather Time Added This Invoice	0	Total Weather Time To Date	0
Other Delays Claimed This Invoice	0	Total Other Delays To Date	98

CERTIFICATION, RECOMMENDATION, & APPROVAL

The undersigned Contractor certifies that: (1) all previous progress payments received from Owner on account of Work done under the Contract referred to above have been applied on account to discharge Contractor's legitimate obligations incurred in connection with the Work covered by all prior Applications for Payment; (2) title of all Work, materials and equipment incorporated into said Work or otherwise listed in or covered by the Application for Payment will pass to Owner at time of payment free and clear of all Liens, security interests and encumbrances (except such as are covered by a Bond acceptable to Owner indemnifying Owner against any such Lien, security interest or encumbrance); (3) all Work covered by this Application for Payment is in accordance with the Contract Documents and not defective; (4) all contract labor standards requirements have been complied with by Contractor and by each subcontractor employing mechanics or laborers at the site of the work; and (5) the quantities shown on the attached Unit Price Schedule reflect the quantities complete at the closing date of this invoice period.

Certified By:
CONTRACTOR:

By: [redacted]

Date: 5-27-21

Recommended By:
ENGINEER: Garver

By: [redacted]

Date: 05/26/2021

Approval for Payment By:
OWNER: City of Bentonville

Approved By: _____

Date: _____

Total Amount of Work Done	$	621,456.06
Plus Materials Stored	$	-
TOTAL	$	621,456.06
Less Retainage (5% of Total Amount of Work Done)	$	-
Difference	$	621,456.06
Less Previous Payments	$	590,383.26
AMOUNT DUE ON CONTRACT THIS INVOICE	$	31,072.80

WORK COMPLETED TO-DATE
WALTON BLVD. AND NW 3RD STREET INTERSECTION

INVOICE NUMBER: 8
TO: 05/26/21

ITEM NUMBER	DESCRIPTION	UNIT	ORIGINAL CONTRACT QUANTITY	UNIT PRICE	REVISED CONTRACT QUANTITY	QUANTITY THIS INVOICE	AMOUNT THIS INVOICE	QUANTITY TO-DATE	AMOUNT TO-DATE
1	4" Portland Cement Concrete Base	SY	146.00	$ 13.75		0.00	$ -	146.00	$ 2,007.50
2	Site Preparation	LS	1.00	$ 6,370.89		0.00	$ -	1.00	$ 6,370.89
3	Unclassified Excavation	CY	130.00	$ 46.29		0.00	$ -	20.00	$ 925.80
4	Undercut Excavation	CY	50.00	$ 102.10		0.00	$ -	0.00	$ -
5	Trench and Excavation Safety System	LS	1.00	$ 3,000.00		0.00	$ -	1.00	$ 3,000.00
6	Maintenance of Traffic	LS	1.00	$ 3,579.75		0.00	$ -	1.00	$ 3,579.75
7	Concrete Ditch Paving	SY	5.30	$ 209.00		0.00	$ -	0.00	$ -
8	24" Reinforced Concrete Pipe, Class III	LF	205.00	$ 139.03		0.00	$ -	156.00	$ 21,688.68
9	Sidewalk Underdrain	EA	1.00	$ 1,100.00		0.00	$ -	1.00	$ 1,100.00
10	4' Curb Inlet (Type MO)	EA	3.00	$ 1,286.67		0.00	$ -	2.00	$ 2,573.34
11	4' Inlet Extension	EA	3.00	$ 1,180.00		0.00	$ -	3.00	$ 3,540.00
12	8' Inlet Extension	EA	1.00	$ 1,760.00		0.00	$ -	1.00	$ 1,760.00
13	Concrete Pavement Repair	SY	21.00	$ 148.50		0.00	$ -	31.00	$ 4,603.50
14	Seeding	ACRE	0.50	$ 2,640.00		0.00	$ -	0.50	$ 1,320.00
15	Temporary Erosion Control	LS	1.00	$ 8,640.68		0.00	$ -	1.00	$ 8,640.68
16	Sodding	SY	635.00	$ 7.73		0.00	$ -	635.00	$ 4,908.55
17	4" Thick Sidewalk	SY	60.00	$ 124.84		0.00	$ -	60.00	$ 7,490.40
18	Retaining Wall Integral with 6" Thick Sidewalk	LF	17.00	$ 317.07		0.00	$ -	17.00	$ 5,390.19
19	Concrete Curb and Gutter	LF	618.00	$ 23.48		0.00	$ -	626.00	$ 14,698.48
20	Roadway Construction Control	LS	1.00	$ 15,000.00		0.00	$ -	1.00	$ 15,000.00
21	Cold Milling Asphalt Pavement	SY	1,014.00	$ 4.79		0.00	$ -	1,014.00	$ 4,857.06
22	6" Aggregate Base Course (Class 7)	SY	334.00	$ 11.78		0.00	$ -	314.00	$ 3,698.92
23	ACHM Surface Course (PG70-22)	TON	140.00	$ 204.97		0.00	$ -	128.00	$ 26,236.16
24	ACHM Surface Leveling Course (PG70-22)	TON	60.00	$ 209.36		0.00	$ -	60.00	$ 12,561.60
25	Concrete Driveway	SY	90.00	$ 141.69		0.00	$ -	55.00	$ 7,792.95
26	Asphalt Driveway	SY	44.00	$ 88.60		0.00	$ -	44.00	$ 3,898.40
27	Valve Box Replacement	EA	1.00	$ 470.81		0.00	$ -	1.00	$ 470.81
28	2" Sewer Force Main	LF	200.00	$ 20.31		0.00	$ -	0.00	$ -
29	Thermoplastic Pavement Marking - 6" Yellow	LF	1,482.00	$ 4.32		0.00	$ -	1,482.00	$ 6,402.24
30	Thermoplastic Pavement Marking - 6" White	LF	450.00	$ 4.32		0.00	$ -	450.00	$ 1,944.00
31	Thermoplastic Pavement Marking - 12" White	LF	502.00	$ 27.00		0.00	$ -	502.00	$ 13,554.00
32	Thermoplastic Pavement Marking (Arrows)	EA	12.00	$ 432.00		0.00	$ -	12.00	$ 5,184.00
33	Thermoplastic Pavement Marking (Words)	EA	4.00	$ 486.00		0.00	$ -	4.00	$ 1,944.00
34	Salvage, Maintain, and Reinstall Sign with New Post	EA	1.00	$ 324.00		0.00	$ -	1.00	$ 324.00
35	Advance Warning Sign	EA	4.00	$ 385.00		0.00	$ -	4.00	$ 1,540.00
36	System Local Controller-Fiber (8 Phases)	EA	1.00	$ 28,188.60		0.00	$ -	1.00	$ 28,188.60
37	Traffic Signal Controller (Modification)	EA	1.00	$ 3,850.00		0.00	$ -	1.00	$ 3,850.00
38	Ethernet Switch	EA	2.00	$ 1,947.00		0.00	$ -	2.00	$ 3,894.00
39	GPS Preemption System	EA	1.00	$ 12,430.00		0.00	$ -	1.00	$ 12,430.00
40	Battery Backup System	EA	1.00	$ 9,366.50		0.00	$ -	1.00	$ 9,366.50
41	WIC Fiber Enclosure	EA	2.00	$ 605.00		0.00	$ -	2.00	$ 1,210.00
42	Traffic Signal Head, LED, (3 Section, 1 Way)	EA	4.00	$ 832.26		0.00	$ -	4.00	$ 3,329.04
43	Traffic Signal Head, LED, (4 Section, 1 Way)	EA	4.00	$ 938.52		0.00	$ -	4.00	$ 3,754.08

WORK COMPLETED TO-DATE
WALTON BLVD. AND NW 3RD STREET INTERSECTION

INVOICE NUMBER: 8
TO: 05/26/21

ITEM NUMBER	DESCRIPTION	UNIT	ORIGINAL CONTRACT QUANTITY	UNIT PRICE	REVISED CONTRACT QUANTITY	QUANTITY THIS INVOICE	AMOUNT THIS INVOICE	QUANTITY TO-DATE	AMOUNT TO-DATE
44	Traffic Signal Head, LED, (5 Section, 1 Way)	EA	2.00	$ 1,072.50		0.00	$ -	2.00	$ 2,145.00
45	Central Control Unit	EA	1.00	$ 11,550.00		0.00	$ -	1.00	$ 11,550.00
46	Pole Mounted Assembly	EA	6.00	$ 1,140.70		0.00	$ -	6.00	$ 6,844.20
47	Infrared Programming Device	EA	1.00	$ 440.00		0.00	$ -	1.00	$ 440.00
48	Countdown Pedestrian Signal Head, LED	EA	6.00	$ 742.50		0.00	$ -	6.00	$ 4,455.00
49	Traffic Signal Cable (5C/14 A.W.G.)	LF	1,401.00	$ 1.93		0.00	$ -	1,849.01	$ 3,568.59
50	Traffic Signal Cable (7C/14 A.W.G.)	LF	374.00	$ 2.20		0.00	$ -	409.00	$ 899.80
51	Traffic Signal Cable (20C/14 A.W.G.)	LF	453.00	$ 3.85		0.00	$ -	688.00	$ 2,648.80
52	Electrical Conductors-In-Conduit (1C/8 A.W.G., E.G.C.)	LF	519.00	$ 1.65		0.00	$ -	647.00	$ 1,067.55
53	Electrical Conductors-In-Conduit (1C/12 A.W.G., E.G.C.)	LF	100.00	$ 0.83		0.00	$ -	114.00	$ 94.62
54	Electrical Conductors-In-Conduit (2C/6 A.W.G.)	LF	23.00	$ 2.75		0.00	$ -	21.00	$ 57.75
55	Electrical Conductors for Luminaires	LF	417.00	$ 1.93		0.00	$ -	588.00	$ 1,134.84
56	Communication Cable, Fiber (12 SMF)	LF	860.00	$ 13.20		0.00	$ -	842.00	$ 11,114.40
57	Galvanized Steel Conduit (2")	LF	122.00	$ 33.00		0.00	$ -	0.00	$ -
58	Non-Metallic Conduit (2")	LF	195.00	$ 11.00		0.00	$ -	272.00	$ 2,992.00
59	Non-Metallic Conduit (3")	LF	453.00	$ 33.00		0.00	$ -	620.00	$ 20,460.00
60	3" NMC (HDPE)	LF	365.00	$ 33.00		0.00	$ -	484.50	$ 15,988.50
61	2" NMC (RISER)	LF	20.00	$ 11.00		0.00	$ -	20.00	$ 220.00
62	Concrete Pull Box (Type 3)	EA	4.00	$ 825.00		0.00	$ -	4.00	$ 3,300.00
63	Concrete Pull Box (Type 3 HD)	EA	6.00	$ 1,045.00		0.00	$ -	6.00	$ 6,270.00
64	Pull Box For Fiber, DS-1609, 30"x48"x24"	EA	2.00	$ 385.00		0.00	$ -	2.00	$ 770.00
65	Fiber Cabinet Base, DS-1611, 40"X44", Quazite #PB40441218B24 (Installation Only)	EA	1.00	$ 385.00		0.00	$ -	1.00	$ 385.00
66	Traffic Signal Mast Arm and Pole with Foundation (34')	EA	2.00	$ 25,518.90		0.00	$ -	2.00	$ 51,037.80
67	Traffic Signal Mast Arm and Pole with Foundation (40')	EA	1.00	$ 26,976.40		0.00	$ -	1.00	$ 26,976.40
68	Traffic Signal Mast Arm and Pole with Foundation (42')	EA	1.00	$ 27,552.80		0.00	$ -	1.00	$ 27,552.80
69	LED Luminaire Assembly	EA	2.00	$ 963.60		0.00	$ -	2.00	$ 1,927.20
70	Traffic Signal Pedestal Pole with Foundation	EA	4.00	$ 4,104.00		0.00	$ -	4.00	$ 16,416.00
71	Service Point Assembly (2 Circuits)	EA	1.00	$ 1,650.00		0.00	$ -	1.00	$ 1,650.00
72	Video Detector Rack (16 Channel)	EA	2.00	$ 1,870.00		0.00	$ -	2.00	$ 3,740.00
73	Video Detector (IP)	EA	7.00	$ 5,638.60		0.00	$ -	7.00	$ 39,470.20
74	Video Cable (Exterior CAT 5E)	LF	1,017.00	$ 1.65		0.00	$ -	955.00	$ 1,575.75
75	Video Monitor (CLR)	EA	1.00	$ 880.00		0.00	$ -	1.00	$ 880.00
76	Central Control Unit (4 Channel)	EA	2.00	$ 11,550.00		0.00	$ -	2.00	$ 23,100.00
77	Video Processor, Edge Card IP (2 Camera)	EA	5.00	$ 5,544.00		0.00	$ -	5.00	$ 27,720.00

WORK COMPLETED TO-DATE
WALTON BLVD. AND NW 3RD STREET INTERSECTION

INVOICE NUMBER: 8
TO: 05/26/21

ITEM NUMBER	DESCRIPTION	UNIT	ORIGINAL CONTRACT QUANTITY	UNIT PRICE	REVISED CONTRACT QUANTITY	QUANTITY THIS INVOICE	AMOUNT THIS INVOICE	QUANTITY TO-DATE	AMOUNT TO-DATE
78R	Contingency	LS	1.00	$ 12,024.26		0.00	$ -	0.00	$ -
CO1.01	Remove 24" Reinforced Concrete Pipe	LF	-	$ 260.25	14.0	0.00	$ -	14.00	$ 3,643.50
CO1.02	23"x14" Reinforced Elliptical Concrete Pipe, Class IV	LF	-	$ 168.66	50.0	0.00	$ -	50.00	$ 8,433.00
CO1.03	4' Curb Inlet with Extended Throat (Type MO)	EA	-	$ 5,720.00	1.0	0.00	$ -	1.00	$ 5,720.00
CO1.04	Concrete Pad above Waterline	CY	-	$ 2,000.00	0.4	0.00	$ -	0.44	$ 880.00
CO1.05	4' Junction Box (Type MO)	EA	-	$ 4,400.00	1.0	0.00	$ -	1.00	$ 4,400.00
CO2.01	Removal and Replacement of Tactile Panel	LS	-	$ 4,769.51	1.0	0.00	$ -	1.00	$ 4,769.51
CO2.02	Open Trench Cut for Signal Conduit	LS	-	$ 10,129.73	1.0	0.00	$ -	1.00	$ 10,129.73
	TOTALS						$ -		$ 621,456.06

Agenda Item Form

Date of City Council Meeting	**6/22/2021**
Department	**ENGINEERING**
Submitted by	**TRACY BILLINGS**
Phone	**(479) 696-0229**

Item Type: Resolution to set public hearing

☐ Budget Adjustment	☐ Change Order	☐ Informational	☐ Ordinance	☑ Resolution	☐ Bid Award

Recommendation/Suggested Action ***(Enter recommendation in space below):***

Resolution setting a public hearing for July 13, 2021 for a Utility Easement Vacation requested for 3913 NE Kensington (VAC21-0011).

Estimated Cost	**$**
Is this Item Budgeted?	☐ Yes ☑ No

If no, please explain how item will be funded ***(briefly explain in space below)*** **:**

EASEMENT REDUCTION PLAT

NORTH

0' 20' 40' 60'

1 INCH = 20 FEET

Miscellaneous Notes

STATE RECORDING NUMBER:
99L-YIN-99W-G37-40573-185

COMPLETED FIELD WORK:
MARCH 01, 2021

REFERENCE DOCUMENTS:
1. WARRANTY DEED FILED IN DEED BOOK 2011 AT PAGE 5869.
2. SURVEY PLAT FILED IN PLAT BOOK 99 AT PAGE 963

SOME FEATURES SHOWN ON THIS PLAT MAY BE SHOWN OUT OF SCALE FOR CLARITY.

DIMENSIONS ON THIS PLAT ARE EXPRESSED IN FEET AND DECIMAL PARTS THEREOF UNLESS OTHERWISE NOTED. MONUMENTS WERE FOUND AT POINTS WHERE INDICATED.

BY GRAPHIC PLOTTING ONLY, THIS PROPERTY IS IN ZONE "X" OF THE FLOOD INSURANCE RATE MAP, COMMUNITY PANEL NO. 05007C0095K, WHICH BEARS AN EFFECTIVE DATE OF 06/05/2013 AND IS NOT IN A SPECIAL FLOOD HAZARD AREA.

EXCEPT AS SPECIFICALLY STATED OR SHOWN ON THIS PLAT, THIS SURVEY DOES NOT PURPORT TO REFLECT OR ANY OF THE FOLLOWING WHICH MAY BE APPLICABLE TO SAID REAL PROPERTY: EASEMENTS, OTHER THAN VISIBLE EASEMENTS WHICH WERE VISIBLE AT THE TIME OF SURVEY; RESTRICTIVE COVENANTS; SUBDIVISION RESTRICTIONS; OR OTHER LAND USE REGULATIONS; AND ANY OTHER FACTS WHICH AN ACCURATE TITLE SEARCH MAY DISCLOSE.

BASIS OF BEARINGS:
BEARINGS SHOWN ARE BASED ON GRID NORTH FOR ARKANSAS COORDINATE SYSTEM, NORTH ZONE, NAD83.
LATITUDE = 36°23'03.9518"
LONGITUDE = -94°09'47.5837"
CONVERGENCE ANGLE = 00°19'34.9926"
DISTANCES SHOWN ON PLAT ARE GRID.
COMBINED SCALE FACTOR (GRID TO GROUND) = 1.000035228

ZONING DISTRICT: R-1, SINGLE FAMILY RESIDENTIAL

SETBACKS:
FRONT: 20'
INTERIOR SIDE: 7'
EXTERIOR SIDE: 20'
REAR: 25'

*WHERE A UTILITY EASEMENT EXTENDS BEYOND THE REQUIRED SETBACK, THE EDGE OF THE UTILITY EASEMENT SHALL BE THE SETBACK.

Legend of Symbols & Abbreviations

- BOUNDARY LINE
- TIE LINE
- CENTERLINE OF ROAD (CR)
- RIGHT OF WAY (R/W)
- FENCE
- BUILDING SET BACK (B.S.B.)
- UTILITY EASEMENT (U.E.)
- OVERHEAD POWER LINE (OHP)
- FOUND MONUMENT (AS NOTED)
- SET 1/2" R. BAR & CAP #1534
- CALCULATED POINT
- CL CENTERLINE OF ROAD
- ROW RIGHT OF WAY
- NOT TO SCALE
- (D) DEED DIMENSION
- (M) MEASURED DATA (CALCULATED DIMENSION)
- (P) RECORDED DIMENSION
- TEL TELEPHONE PEDESTAL
- SPK SPRINKLER VALVE
- MB MAIL BOX
- CB CABLE BOX
- GM GAS METER
- WM WATER METER
- EM ELECTRIC METER
- TEL TELEPHONE PEDESTAL
- MB MAIL BOX

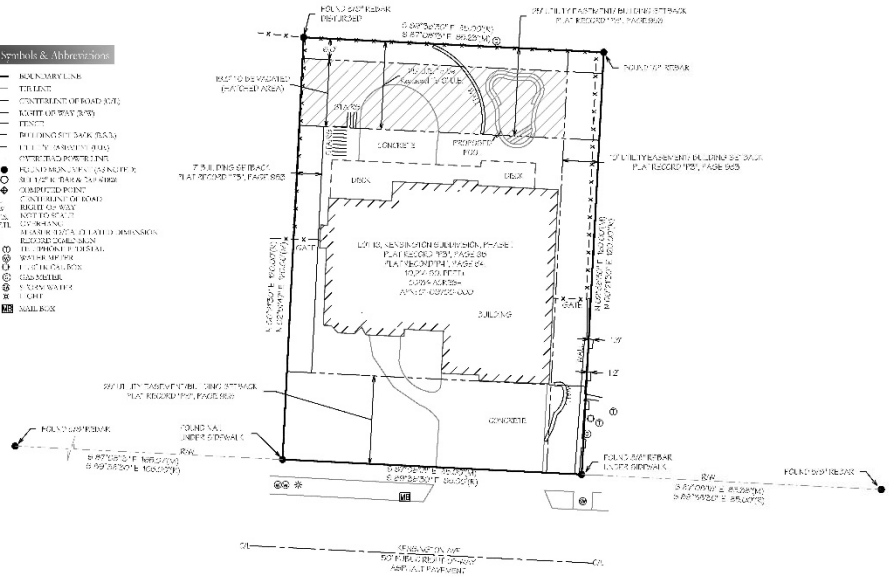

OWNER'S CERTIFICATION AND DEDICATION

WE, THE UNDERSIGNED OWNERS OF THE REAL ESTATE SHOWN AND DESCRIBED HEREIN, DO HEREBY ACKNOWLEDGE THAT WE HAVE THE LEGAL RIGHT AND AUTHORITY TO MAKE THE PROPERTY INTEREST GRANTS CONTAINED ON AND WITHIN THIS DOCUMENT. WE, THE UNDERSIGNED OWNERS OF THE REAL ESTATE SHOWN AND DESCRIBED HEREIN, DO HEREBY ESTABLISH, GRANT, AND DEDICATE TO THE CITY OF ROGERS, ARKANSAS THE RIGHTS OF WAY, EASEMENTS, STREETS AND ALLEYS AS SHOWN ON THIS PLAT FOR PUBLIC USE, BENEFIT, AND ACCESS. THE CITY OF ROGERS IS FURTHER GRANTED THE RIGHTS OF INGRESS AND EGRESS TO AND FROM SAID RIGHTS OF WAY, EASEMENTS, STREETS AND ALLEYS. THE CITY OF ROGERS IS ALSO GRANTED THE RIGHT AND AUTHORITY TO MAINTAIN, SERVICE, AND IMPROVE SAID RIGHTS OF WAY, EASEMENTS, STREETS AND ALLEYS AND THE IMPROVEMENTS CONTAINED THEREIN. ANY RIGHT OR AUTHORITY GRANTED ABOVE SPECIFICALLY REGARDING MAINTENANCE, SERVICE OR IMPROVEMENT SHALL BE EXERCISED IN A MANNER CHOSEN AT THE DISCRETION OF THE CITY OF ROGERS. SAID RIGHTS OF WAY, EASEMENTS, STREETS AND ALLEYS SHALL BE FOR THE BENEFIT OF THE CITY OF ROGERS AND ALL OF ITS FRANCHISED UTILITY PROVIDERS. THE CITY OF ROGERS AND ITS FRANCHISED UTILITY PROVIDERS SHALL HAVE THE RIGHT AND AUTHORITY TO CUT, TRIM, OR REMOVE TREES, SHRUBS, AND OTHER VEGETATION WITHIN SAID RIGHTS OF WAY, EASEMENTS, STREETS AND ALLEYS. THE CITY OF ROGERS AND ALL OF ITS FRANCHISED UTILITY PROVIDERS SHALL ALSO HAVE THE RIGHT AND AUTHORITY TO PROHIBIT THE ERECTION OF BUILDINGS, STRUCTURES, OR FENCES WITHIN SAID RIGHTS OF WAY, EASEMENTS, STREETS AND ALLEYS.

DATE_____ OWNER_____

STATE OF ARKANSAS
COUNTY OF BENTON
SUBSCRIBED AND SWORN BEFORE ME THIS _____DAY OF_____2021

_____
NOTARY PUBLIC

MY COMMISSION EXPIRES:_____

Bentonville Planning Division

This_____Day of_____, 2021

_____
Community Development Director

_____
City of Rogers, Mayor

_____
City of Rogers, City Clerk

EASEMENT RELEASE
AS THE UNDERSIGNED UTILITY COMPANY NAMED, BY OUR SIGNATURE, WE RELEASE THE UTILITY EASEMENT SHOWN AND DESCRIBED ON THIS PLAT OF SURVEY.

_____
CABLE DATE

_____
GAS DATE

_____
WATER DATE

_____
ELECTRIC DATE

_____
TELEPHONE DATE

CERTIFICATE OF SURVEYING ACCURACY:
I, HEATH A. MYERS, HEREBY CERTIFY THAT THIS PLAT CORRECTLY REPRESENTS A BOUNDARY SURVEY MADE BY ME AND BOUNDARY MARKERS AND LOT CORNERS SHOWN HEREON ACTUALLY EXIST AND THEIR LOCATION, TYPE AND MATERIAL ARE CORRECTLY SHOWN AND ALL MINIMUM REQUIREMENTS OF THE ARKANSAS MINIMUM STANDARDS FOR LAND SURVEYORS HAVE BEEN MET.

DATE OF EXECUTION _____

HEATH A. MYERS
REGISTERED PROFESSIONAL LAND SURVEYOR
NO. AR1856
STATE OF ARKANSAS

Significant Observations

A WALL APPEARS TO CROSS OVER THE BOUNDARY BY AS MUCH AS 1.9'.

Owner/Developer

HUERTA JOSE & JENNIFER
3913 KENSINGTON AVE
BENTONVILLE AR 72713-8056

Survey Description

LOT 15, KENSINGTON SUBDIVISION, PHASE I, TO THE CITY OF BENTONVILLE, BENTON COUNTY ARKANSAS, AS SHOWN ON PLAT RECORDED IN "P" AT PAGE 99 AND PLAT RECORD "B" AT PAGE 64.

Utility Notes

THE LOCATION OF UTILITIES SHOWN HEREON ARE FROM OBSERVED EVIDENCE OF ABOVE GROUND APPURTENANCES ONLY. THE SURVEYOR WAS NOT PROVIDED WITH UNDERGROUND PLANS OR SURFACE GROUND MARKINGS TO DETERMINE THE LOCATION OF ANY SUBTERRANEAN USES.

BEFORE DIGGING IN THIS AREA, CALL "ONE CALL" FOR UTILITY LOCATIONS (REQUEST FOR GROUND MARKINGS OF UNDERGROUND UTILITY LINES)

811
Arkansas One Call
Call Before You Dig

Vicinity Map

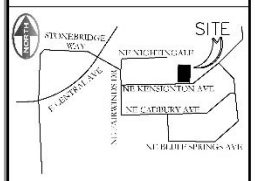

CERTIFICATE OF AUTHORIZATION
BLEW & ASSOCIATES, PA
No. 1534
ARKANSAS

I HEREBY CERTIFY THAT THIS SURVEY IS TRUE AND CORRECT TO THE BEST OF MY KNOWLEDGE AND BELIEF ON THIS THE 8TH DAY OF APRIL, 2021

REGISTERED PROFESSIONAL LAND SURVEYOR
STATE OF ARKANSAS
NO. 1856
SIGNATURE
H. MYERS

THE SIGNATURE ON THIS SEAL IS NOT AN ORIGINAL AND NOT VALID, IN COMPLIANCE WITH ACT 69 OF 1971 THAT NO PLAT MAY BE RECORDED, SHALL THE ABOVE CERTIFICATION SHALL NOT APPLY TO ANY COPY THAT DOES NOT BEAR AN ORIGINAL SEAL AND SIGNATURE

BLEW & ASSOCIATES, PA
CIVIL ENGINEERS & LAND SURVEYORS
3825 N. SHILOH DRIVE
FAYETTEVILLE, ARKANSAS 72703
OFFICE: 479.443.4506
FAX: 479.582.1883
www.BLEWINC.com
Certificate of Authorization № 1534

DRAWN BY	CHECKED BY	SHEET NO.
DH 04/19/21	WG	S5
SCALE: 1" = 20'	JOB NO.	
WASHINGTON COUNTY, ARKANSAS	21-2022	

LOCATION: 3913 KENSINGTON AVENUE, BENTONVILLE, ARKANSAS

PREPARED FOR:
JOEY & JENNIFER HUERTA

~ 500 ~

RESOLUTION NO._____

IN THE CITY COUNCIL FOR THE CITY OF BENTONVILLE, ARKANSAS:

WHEREAS, a petition was duly filed with the City Council of Bentonville, Arkansas by Jose and Jennifer Huerta requesting a utility easement vacation (VAC21-0011) within the City of Bentonville, Arkansas be vacated, which said utility easement is described as follows:

A 25' Utility Easement reduced to a 19' Utility Easement on the north side of Lot 19 Kensington Phase 1 as shown on the Plat Record Book P Page 54 and filed the record in the Benton County Clerk's Office, Benton County, Arkansas (Bentonville, Arkansas). The 10' Utility Easement on the west side of Lot 19 Kensington Phase 1 is excluded from the Easement reduction.

WHEREAS, Ark. Code Ann. Section 14-301-302(c) provides that the City Council shall by resolution fix a day for the hearing of the petition and shall direct the City Clerk and Recorder to give notice of the meeting, by publication, once per week for two (2) consecutive weeks in some newspaper published in and having general circulation in Bentonville, Benton County, Arkansas.

NOW, THEREFORE, BE IT RESOLVED, by the City of Bentonville, Arkansas, that the petition to close the above described utility easement is set for a hearing on July 13, 2021 at 6:00 p.m. in the City Council Room of the City of Bentonville, Arkansas, and the Bentonville City Clerk and Recorder is directed to give notice of this meeting by publication as set forth by Ark. Code Ann. Section 14-301-302(c).

The above and foregoing resolution was passed, approved and adopted the _____ day of _____ 2021 at a regular meeting of the City Council of the City of Bentonville, Arkansas.

_____
Kirby Romines, City Clerk
Bentonville, Arkansas

_____
Stephanie Orman, Mayor
City of Bentonville, Arkansas

Agenda Item Form

Date of City Council Meeting	**6/22/2021**
Department	**Parks and Recreation**
Submitted by	**Josh Stacey**
Phone	**(479) 696.0204**

Item Type: (*Check All That Apply*)

☐ Budget Adjustment	☐ Change Order	☐ Informational	☐ Ordinance	☐ Resolution	☑ Bid Award

Recommendation/Suggested Action *(Enter recommendation in space below):*

Bid award #IFB-21-35 to American Soccer Company (Score Sports) for the purchase of soccer uniforms for the Fall 2021 and Spring 2022 soccer seasons per the attached unit price bid.

Estimated Cost	**$26,190**
Is this Item Budgeted?	☑ Yes ☐ No

If no, please explain how item will be funded *(briefly explain in space below)* **:**

Memo

To:	City Council, Mayor Orman
From:	Josh Stacey, Recreation Services Manager
Through:	David Wright, Parks and Recreation Director
Date:	June 7, 2021
Re:	Bid Award for IFB-21-35- Youth Soccer Uniforms

Bid award for IFB-21-35 in the amount of $26,190 to American Soccer Company (Score Sports) per the attached unite price bid for soccer uniforms for the youth soccer program administered by Bentonville Parks and Recreation.

Bentonville Parks and Recreation offers youth soccer programs for the community. Each year, the program has over 2,400 unique players participate over a fall and spring season. Due to the high number of soccer participants in this program, uniform expenses will exceed $20,000 and require Council approval. This expense is fully recouped through registration fees for this program and is a budgeted item.

If you have any questions regarding this item, please let me know. Please call me at 696.0204, or email jstacey@bentonvillear.com.

1

CITY OF BENTONVILLE
BID OPENING TABULATION SHEET
IFB-21-35 YOUTH AND ADULT SOCCER UNIFORMS FOR THE 2021-2022 SEASON
THURSDAY, MAY 27, 2021 @ 2:00PM

BIDDER NAME	TOTAL BID PRICE
RESTORATION APPAREL	$ 56,888.32
AD-WEAR & SPECIALTY OF TEXAS	$ 36,932.32
SCORE SPORTS	$ 26,190.00

CITY OF BENTONVILLE

PURCHASING OFFICE – (479) 271-3115 – PURCHASING@BENTONVILLEAR.COM
ADMINISTRATIVE SERVICES BUILDING 1000 SW 14TH STREET BENTONVILLE, ARKANSAS 72712

FOR PUBLICATION

PUBLICATION DATES: May 9, 2021

NOTICE TO BIDDERS

YOUTH AND ADULT SOCCER UNIFORMS FOR THE 2021-2022 SEASON
Invitation For Bid (IFB)-21-35

The City of Bentonville, Arkansas is accepting formal sealed bids for the purchase and delivery of youth and adult soccer uniforms for the 2021-2022 soccer season, with an approximate total of 2,500 uniforms ordered at various times throughout the year, for the Parks and Recreation Department. Uniforms must include the jersey, shorts, and socks and must have a variety color choices for the City to consider, as specified in the Bidding Documents. The first order of uniforms must be delivered to the City on or prior to July 30, 2021. Bidders are required to submit samples of the proposed items to the City as part of their Bid Submission, per the Specifications in the Bidding Documents.

The City reserves the right to reject any or all bids and to waive informalities.

Interested parties can obtain the required Bid Packet by emailing purchasing@bentonvillear.com, by calling 479-271-3115, from the Purchasing Office located at the address below, or by downloading the documents from the City's website by visiting http://bentonvillear.com/211/Purchasing and selecting 'Review Open Bids'. Bidders who download the Bid Packet are encouraged to notify Purchasing of the download to ensure they are on the distribution list for any Addenda and/or Q&A issued. Bidders who wish to deliver a Bid Submission prior to the Bid Opening date/time may do so by delivering the Bid Submission to the Purchasing Office located on the 2nd floor of the City of Bentonville Administrative Services Building, located at 1000 SW 14th Street Bentonville, AR 72712. Bidders may also choose to deliver their Bid Submission at the Public Bid Opening, but must do so prior to the Public Bid Opening time.

There will be a Public Bid Opening for IFB-21-35 held at 2:00pm on Thursday, May 27, 2021; the Bid Opening will be held at the City of Bentonville Administrative Services Building in Room A239 on the 2nd floor, located at 1000 SW 14th Street Bentonville, AR 72712. All Bid Submissions (including the required sample submissions) must be received by Purchasing prior to the Public Bid Opening time. Late submissions and unsigned Bid Submissions will be rejected, without exception.

Interested parties may contact the Purchasing Office with any questions regarding submission details for this solicitation by calling (479) 271-3115 or by emailing purchasing@bentonvillear.com.

CITY OF BENTONVILLE, ARKANSAS ADMINISTRATIVE SERVICES
PURCHASING OFFICE
1000 SW 14th Street Bentonville, AR 72712
BIDDERS: NOTE ADDRESS CHANGE INFORMATION IN THIS SOLICITATION

INVITATION FOR BID (IFB) SOLICITATION

SOLICITATION INFORMATION			
Bid Number:	IFB-21-35	**Date of Issuance:**	May 9, 2021
Description:	YOUTH AND ADULT SOCCER UNIFORMS FOR THE 2021-2022 SEASON		
Requesting Department:	CITY OF BENTONVILLE PARKS & RECREATION DEPARTMENT		
Pre-Bid Meeting Information:	NO PRE-BID MEETING IS SCHEDULED FOR THIS SOLICITATION.		
Bid Bond Requirement:	BID BOND NOT REQUIRED FOR THIS SOLICITATION		

BID OPENING DATE & TIME	
Bid Opening Date and Time:	**MAY 27, 2021 AT 2:00 P.M. CST**
Bid Opening Location:	**City of Bentonville Administrative Services Building** Bid Opening Room – 2ND Floor – Room A239 1000 SW A Street Bentonville, AR 72712

DELIVERY OF BID SUBMISSION	
Location (and mailing address) for Bid Submission Delivery:	**City of Bentonville Administrative Services Building** **Purchasing – 2nd Floor** 1000 SW 14th Street, Bentonville, AR 72712
Bid Submission Requirements:	All bids must be received by the Purchasing Office prior to the date and time listed herein for the bid opening, in a sealed envelope with the following information clearly marked on the outer envelope: - Solicitation ID (IFB Number) - Bidder's Name/Company Name & Phone Number Bids which must be opened to be identified may be rejected. Bids which are not sealed or are opened upon delivery will not be accepted. Late bids, unsigned bids, or bids which do not contain a bid bond (when required) will be rejected, without exception. In accordance with Arkansas Procurement Laws and Rules, it is the responsibility of the Bidder to submit their bid submission correctly and to the designated location prior to the bid opening time.

Deadline for Submission of Requests for Information, Questions or Clarifications:	MAY 24, 2021 4:30P.M. CST
Questions should be submitted only to the Purchasing Office via written communication only to purchasing@bentonvillear.com.	

CITY OF BENTONVILLE, ARKANSAS ADMINISTRATIVE SERVICES
PURCHASING OFFICE
1000 SW 14th Street Bentonville, AR 72712
BIDDERS: NOTE ADDRESS CHANGE INFORMATION IN THIS SOLICITATION

EXECUTION OF BID PAGE (REQUIRED)

Upon signing this Bid, the Bidder certifies that he/she has read and agrees to the requirements set forth in this bid proposal including specifications, conditions and pertinent information regarding the articles being bid on, and agrees to furnish these articles at the prices stated. All information on this page must be completed.

Unsigned bids will be rejected - no exceptions.

Name of Firm: AMERICAN SOCCER COMPANY INC. **Phone Number:** 800-626-7774

Business Address (Full Street/City/State/Zip): 726 E ANAHEIM STREET WILMINGTON ,CA

Is this address able to accept mail deliveries (for the purpose of returning bid bonds etc.): ✓ **Yes** __ **No**

Name of Contact Person: VANESSA MARTINEZ **Email:** vmartinez@scoresports.com

Signature of Authorized Person: [redacted] **Date:** 5/14/2021

Printed or Typed Name: Vanessa Martinez **Title:** BID SPECIALIST

Arkansas Contractors License Number: N/A **(Not required unless specified)**

Sales or Use Tax ID Number: 95-2984338

Bid Bond Included: ___ **Yes** ✓ **No (only required if specified in this IFB Document)**

[This space has been intentionally left blank]

CITY OF BENTONVILLE, ARKANSAS ADMINISTRATIVE SERVICES
PURCHASING OFFICE
1000 SW 14th Street Bentonville, AR 72712
BIDDERS: NOTE ADDRESS CHANGE INFORMATION IN THIS SOLICITATION

!IMPORTANT! THE PURCHASING OFFICE HAS MOVED!

The City of Bentonville Purchasing Office has moved to:
City of Bentonville
2ND FLOOR
Administrative Services Building
1000 SW 14th Street
Bentonville, AR 72712

CITY OF BENTONVILLE, ARKANSAS ADMINISTRATIVE SERVICES
PURCHASING OFFICE
1000 SW 14th Street Bentonville, AR 72712
BIDDERS: NOTE ADDRESS CHANGE INFORMATION IN THIS SOLICITATION

INTENT

The intent of this Invitation for Bid (IFB) is for the purchase and delivery of approximately 2500 (two thousand five hundred) custom style youth and adult soccer uniforms for the 2021-2022 season. Uniforms should include the jersey, shorts, and socks. Bidders must present a variety of color choices to the City.

The City of Bentonville requires that bidders include samples of all proposed products in their bid submissions, Bidders are directed to the samples requirement and specifications sections of this Invitation for Bid document for details.

RESPONSE DOCUMENTS & PRE-BID REQUIREMENTS

The following documents must be complete to provide a complete bid response package:

- IFB document, all response fields complete.
    - Only City documents included in this Invitation for Bid shall be used for submitting pricing and response documents; supplemental information (such as brochures) may be included as supplemental information for the City.
- Samples of all proposed products, including sample jersey(s), short(s) and sock(s). Samples must be delivered prior to the bid opening date and time. Bidders should reference the 'Sample Submission Requirement' section of this IFB document for all requirements and information.
- Samples of the color options available to the City at the bid prices:
    - City's preference is 16 color options;
    - The required minimum number of color options to be available is 10

All pricing must be entered on pricing sheet ("no bid" is an acceptable response, however bids will not be awarded to vendors whom submit partial bids).

CONTRACT TERM:

Upon award, this bid shall remain active throughout the 2021-2022 youth soccer season. The awarded vendor will receive Purchase Orders throughout the season for various quantities, ranging from large orders to smaller orders, dependent on the City's needs and final participant registration numbers.

There are no minimum or maximum order amounts associated with this bid. Conditional bids will not be accepted.

SCOPE

The City of Bentonville, Arkansas is soliciting bids for the purchase and delivery of approximately 2500 (two thousand five hundred) youth and adult soccer uniforms, for the 2021-2022 youth soccer season; delivery of the first order is required no later than July 30, 2021.

Uniforms should include the jersey, shorts, and socks. Jerseys and shorts should be approximately 100% Polyester; socks should be approximately 97% Polyester and 3% Rubber.

Bidders must present a variety of color choices for the City to choose from, as follows:

- Jerseys: A minimum of 16 (sixteen) color choices is preferred; 10 (ten) color choices are required;
- Shorts: Shorts must be black;
- Socks: A minimum of 10 (ten) color choices is required

SCOPE OF WORK CONTINUED

The following design element requirements shall apply:

- Numbering on the back of the jerseys;
  - Numbering must be a minimum of seven (7) inches in height.
  - Numbering will be limited at two (2) numbers per jersey.
- There shall be a one color logo on the back of the jersey; placement shall be the top, middle.
- There shall be a one color logo on the front of the jersey; placement shall be the top, left crest.
- There shall be a one color team name on the front of the jersey; placement shall be the center, middle.

*Additional information regarding design elements is located in the SPECIFICATIONS section of this IFB document.

All uniforms must be bundled by team name and age group upon delivery to the City, marked in such a manner that City staff will be able to quickly identify the bundles.

**Please note sample requirements in the SAMPLE SUBMISSION REQUIREMENT section of this IFB document.*

SAMPLE SUBMISSION REQUIREMENT

All Bidders are required to submit samples of all proposed products prior to the bid opening date and time; however, it is not necessary to submit a sample for each color option.

All samples submitted as part of a Bid Submission to this Invitation for Bid become the property of the City of Bentonville.

Samples may be submitted by either including the samples in the SEALED package containing the Bid Submission, or they may be submitted separately, in a separate package; however, the samples and the Bid Submission must both arrive prior to the Bid Opening Time for the Bid Submission to be accepted.

- **SAMPLES WHICH ARE SUBMITTED SEPARATE (IN A SEPARATE PACKAGE) FROM THE BID SUBMISSION:**
  The City will accept IFB document and sample submissions in separate shipments/packages; however, all components (required samples and the completed IFB document) are required to be delivered prior to the bid opening date and time. Submissions received after the bid opening date and time will result in a 'late submission' and will be rejected, without exception.

  Any package containing the required samples, which is shipped separately from the completed IFB document submission, must clearly indicate the following information on the outside envelope:
  - **Solicitation Number (IFB-21-35)**
  - **Company Name**
  - **Identification that the package contains samples (ex. 'Required Sample Submission')**

  Any package which does not clearly state the above information on the outside envelope may not be recorded as submitted prior to the bid opening date and time, and may result in rejection. Bidders are responsible for the complete and accurate submission of all required components.

ANTICIPATED ORDER SCHEDULE

The City anticipates larger pre-season orders to be placed in Summer 2021 and Winter 2022, with smaller orders placed mid-season or after registration for each session closes. Smaller order quantities will be placed throughout the season, most often mid-season or upon registration concluding and final participation and sizing data being gathered.

DELIVERY

The City of Bentonville requests delivery of the uniforms, as follows:

Approximate Order Placement	Requested Delivery Date/Timeline
First Pre-Season Order (Placed Summer 2021)	Delivery by July 30, 2021 **(REQUIRED)**
Second Pre-Season Order (Placed Winter 2021/2022)	Delivery by February 15, 2022
Smaller orders placed as needed	Delivered to the City within two (2) weeks of receiving the City's Purchase Order.

If this schedule cannot be met, Bidder must state the number of days required to place products in the City's designated location, using the table below. Failure to state delivery time obligates the Bidder to complete delivery by the City's requested delivery dates. Extended delivery dates may be considered when in the best interest of the City. All deliveries will be to the City of Bentonville, Arkansas.

(REQUIRED RESPONSE)

Approximate Order Placement	BIDDER'S RESPONSE DELIVERY DATE
First Pre-Season Order (Placed Summer 2021) City's Requested Delivery Date: No later than July 30, 2021	Score Sports Guarantees Delivery at time Requested) Delivery by July 30th, 2021
Second Pre-Season Order (Placed Winter 2021/2022) City's Requested Delivery Date: No later than February 15, 2022	Delivery by February 15, 2022
Smaller orders placed as needed *While the City requests delivery within two (2) weeks, shorter delivery times are more favorable to the City.*	Delivered to the City within 5-7 days **Days / Weeks** (circle one) of receiving the City's Purchase Order.

EQUIVALENT ITEMS/REFERENCED SPECIFICATIONS

Whenever these specifications mention an item by name and use specific descriptions as reference thereto, it is intended to convey to the Bidder an understanding of the standard of excellence required. Items of equal type, quality, and size that will conform substantially to the standard of excellence established to provide equivalent merit, strength, durability, and to perform the required function in accordance with these specifications may be offered. Bids containing items proposed as equivalent shall clearly describe the equivalent article being offered and indicate how it differs from the City's original specification. Descriptive literature or manufacturer's specifications, in addition to any supplemental information necessary for comparison purposes should also be submitted with the bid. It is the Bidder's responsibility to demonstrate to the City that a substitute offer is equivalent to and meets the standard of quality indicated by the City's specifications. The City of Bentonville shall have the final approval of whether a substitute item is equal to the item specified.

INVOICING

The awarded Bidder shall submit an invoice to the City, at the remittance address below:

City of Bentonville Administrative Services
ATTN: Accounts Payable
1000 SW 14th Street
Bentonville, AR 72712

Failure to submit invoices on time and to the correct address may result in delayed payment.

INSPECTION

The City reserves the right to inspect the uniforms upon delivery and to refuse acceptance, either at the time of delivery or once the City has had an opportunity to inspect the uniforms (within 48 hours of delivery), to verify that the delivered items meet the City's specifications. In the event that the delivered items fail to meet the City's specifications upon inspection, it is the awarded Bidder's sole responsibility to either replace the items with items meeting specifications or modify the items to meet specifications at no additional cost to the City and in an expedited and professional manner.

PAYMENT TERMS

[X] Net 30 days from Delivery [ ] Other: _____

Registered with the Secretary of State's Office to Conduct Business in the State of Arkansas:

_____ Yes X No

INDEMNIFICATION

Due to the City statutory tort Immunity, the City does not carry liability insurance for such claims. Accordingly, any contract or award entered into with a Bidder may not include a clause in which the City agrees that it or its' officials or employees will indemnify the other party.

The awarded Bidder agrees to indemnify the City and hold it harmless against all claims, liability, loss, damage or expense, including but not limited to counsel fees, arising from or by reason of any actual or claimed trademark, patent or copyright infringement or litigation based thereon, with respect to the service or any part thereof covered by this order, and such obligation shall survive acceptance of the services and payment thereof by the City.

CITY'S RIGHT TO REQUEST ADDITIONAL INFORMATION

The City reserves the right to request additional information or references from the apparent low Bidder, if it is deemed to be in the City's best interest, and use that information in the evaluation for award based on what is in the City's best interest.

LAWS AND REGULATIONS

The bidder's attention is directed to the fact that all applicable Federal and state Laws, and the rules and regulations of all authorities having jurisdiction over the purchase shall apply to the purchase throughout, and they will be deemed to be included the same as though herein written out in full.

CITY OF BENTONVILLE, ARKANSAS ADMINISTRATIVE SERVICES
PURCHASING OFFICE
1000 SW 14th Street Bentonville, AR 72712
BIDDERS: NOTE ADDRESS CHANGE INFORMATION IN THIS SOLICITATION

Contractor/Vendor Disclosure

Company Name: AMERICAN SOCCER COMPANY INC.

Identify each employee of the City Of Bentonville to whom you, any of your Employees owning more that 5% interest in your Company, or are a Director/Executive/Decision Maker of your Company are immediately related.

Immediate Relation includes:

- Spouse/Domestic Partner
- Parents-Natural or Legal/Step/In Laws
- Children/Step, Siblings-Whole/Half/Step/ In Laws
- Grandchildren/Step, Great Grandchildren.

_____

_____

_____

_____

Failure to disclose shall be considered a material breach and grounds for immediate termination of this contract/agreement. **Note: Any change in circumstances resulting in a conflict or appearance of a conflict shall be reported in 30 days of change of circumstance.** VLM **Initials**

[This space has been intentionally left blank]

CITY OF BENTONVILLE, ARKANSAS ADMINISTRATIVE SERVICES
PURCHASING OFFICE
1000 SW 14th Street Bentonville, AR 72712
BIDDERS: NOTE ADDRESS CHANGE INFORMATION IN THIS SOLICITATION

CITY OF BENTONVILLE, ARKANSAS
PURCHASING OFFICE

INSTRUCTIONS TO BIDDERS

1. **SCOPE:** These instructions to Bidders and general conditions apply to solicitations for material, equipment, supplies or services with an estimated single or combined cost of $20,000 or more. These conditions shall be in force unless otherwise modified by the City in this bid document. Bidders shall be advised that the City of Bentonville is not responsible for the content of any bid package received through any 3rd party bid service. It is the sole responsibility of the vendor to ensure the completeness of the documents received from any 3rd party source other than hand delivered.

2. **DEFINITIONS (AS USED HEREIN):**
   a. The term "Invitation For Bid" means a solicitation of formal sealed bids with a combined or single unit value $20,000 and over. The acronym "IFB" means Invitation for Bid.
   b. The term "bid" means the offer by the Bidder.
   c. The term "Bidder" means the person or organization responding to the solicitation.
   d. The term "contractor" means a person or organization who is the successful Bidder and who enters into a contract with the City.
   e. The term "change order" means a written order from the Purchasing department directing the contractor to make changes to a contract.
   f. The term "City" means the City of Bentonville, Arkansas.
   g. The term "City Council" means the governing body of the City of Bentonville, Arkansas.

3. **PREPARATION OF BIDS:** Bidders shall review the specifications, drawings, and all special and general conditions. Failure to do so will be at the Bidder's risk.

   Each Bidder shall furnish the information required in the solicitation. The Bidder shall provide their name, address, e-mail address, and telephone number where indicated in the solicitation documents. The affidavit must be signed by an officer or employee having the authority to bind the company or organization by his/her signature and included with the bid response.

   Unit price for each unit offered must be provided. The unit price will be presumed correct.

   The Bidder must state a definite time for delivery of supplies or performance of services.

4. **SUBMITTING A BID:** Bids must be received by the City of Bentonville Purchasing Office **BEFORE** the time of opening indicated in the solicitation. All references to time shall be Bentonville, Arkansas time (Central time zone). Late bids will be rejected. Any exceptions or additional information required on a solicitation will be noted in the bid documents. Failure to provide any requested information or to follow these procedures may result in the rejection of your bid.

5. **BID DOCUMENT MISTAKES:** The Bidder shall not be allowed to modify or correct mistakes in the bid document after the opening of the bid. Failure to complete the entire bid accurately may result in declaring the bid as non-responsive and the bid may be rejected.

   Bids may not be withdrawn after the bid opening time and date if a bid mistake is based upon an error in judgment. If a nonjudgmental mistake, such as a math error, is suspected by the City or the Bidder, the Bidder shall respond within two (2) business days of the bid opening or within two (2) days of notification from the City with a request for the City to consider verification of the mistake. Once a bid has been verified, it shall be considered submitted, as verified. The City shall permit a Bidder to withdraw its bid without penalty or forfeiture of bid security if: (a) a nonjudgmental mistake is evident on the face of the bid, or (b) the Bidder establishes by clear and convincing evidence that a nonjudgmental mistake was made.

   If multiple bids are received from the same vendor, the City will either consider only one of the bids from that vendor, or reject all bids from the vendor, at the sole discretion of the City.

6. **ACCEPTANCE OF OFFER:** The submitted bid is considered an offer on the part of the Bidder; such offer is deemed accepted upon issuance by the City of a Purchase Order or other contractual document.

7. **FIRM PRICES:** By submitting the bid, Bidder signifies that the prices, terms and conditions quoted in their bid will be firm for acceptance for a period of not less than ninety (90) days from the bid opening date unless otherwise specified in the solicitation. Prices quoted must remain firm for the period of performance of any resulting purchase order or contract to be performed over a specified period of time as indicated in the solicitation.

8. **CONTRACT RENEWAL**: The City reserves the right to renew any contract resulting from this solicitation at the same prices, specifications, terms and conditions, upon mutual agreement between the City and the contractor.

9. **ESTIMATED QUANTITIES**: Whenever a bid requests prices to be firm for a period of performance, the quantities or usages shown are estimated only with no guarantee made by the City. The quantities are for the Bidder's information only, and the City will be bound only for actual quantities ordered.

10. **DISCOUNTS**: Cash discounts will be considered in determining the award. Unless otherwise indicated in the IFB, discounts offering 10 days or more will be taken by the City's Accounts Payable office, with payment made on the nearest pay period after receipt, inspection and acceptance of articles, and receipt of correct invoice(s).

11. **SAMPLES**: Samples of items, when required, must be submitted within the time specified at no expense to the City. If not destroyed by testing, samples may be returned at the Bidder's expense unless otherwise indicated in the solicitation.

12. **AWARD**: Award will be made to the lowest most responsive and responsible Bidder, which will be judged on the basis of price, conformance to specifications, quality, delivery time, references, payment terms, and in the best interest of the City of Bentonville, all factors being considered.

    The City reserves the right to accept or reject any or all bids or part of bids, to waive irregularities and technicalities, and to request rebids on the material described in the solicitation.

    The City reserves the right to award the contract on a split-order basis, lump-sum or individual-item basis, or any other combination that is in the best interest of the City unless otherwise specified.

    Conditional bids are subject to rejection in whole or in part at the sole discretion of the City.

    In the event of two or more identical low bids, award will be made to the most responsive and responsible bidder, as determined in the bid evaluation process.

    No order or contract resulting from this solicitation may be assigned, transferred, or delegated to another party without written approval of the Assistant Finance Director of the City.

13. **BRAND NAMES:** If brand names, make, name of any manufacturer, trade name, or vendor catalog number are specified in these bid documents, it is for the purpose of establishing a grade or quality of material only. When the City does not wish to rule out other brands or makes, the phrase OR EQUAL is added. However, if a product other than that specified is bid, it is the Bidder's responsibility to identify such product in their bid and prove to the City that the product is equal to or better than the product specified. Unless otherwise indicated, evidence in the form of samples may be requested if the proposed brand is other than that specified by the City. Such samples are to be furnished as specified in the solicitation or upon request of the City. Any samples requested by the City must be received by the City no later than four (4) days after formal request is made.

14. **VARIATIONS OF SPECIFICATIONS**: For purposes of evaluation, Bidder must indicate any variances from any provision, specification, or condition stated in this solicitation, no matter how slight. If Bidder does not indicate any variations, it will be assumed that the product or service fully complies with the provisions, specifications, or conditions as stated. If satisfactory bids are not received, the City reserves the right to consider alternate bids containing deviations from stated specifications.

15. **QUALITY:** Unless otherwise identified in the solicitation, all materials used in the manufacture or construction of supplies, materials or equipment covered by this solicitation shall be new. The items bid must be the latest make or model in current production, as offered to commercial trade, and of the highest quality material and workmanship. Used, shopworn, demonstrator, prototype, or discontinued models are not acceptable.

16. **ECO-FRIENDLY (GREEN) PRODUCTS:** The City of Bentonville supports the use of products that are ecologically friendly to the environment. Bidders are urged to include information with their bid submittal that describes the human health and environmental impact of products proposed. This eco-friendly approach takes into account, but is not limited to, waste production, energy and water use, greenhouse gas emissions, indoor air quality, recycled and reused content and packaging, and the presences of hazardous substances. Consideration may be given to these eco-friendly products when compared to mainstream products in cost and packaging.

17. **MATERIAL SAFETY DATA SHEET (MSDS):** It is mandatory for a manufacturer, supplier, or distributor of hazardous material to supply an MSDS as required by 29CFR 1910.1200 with the first shipment. Any time the content of an MSDS is revised, the vendor is required to provide a new MSDS to the City.

18. **ACCEPTANCE OF MATERIAL**: The material delivered under this bid shall remain the property of the seller until a physical inspection and actual usage of this material and/or service is made and is accepted by the City. It must comply with the terms of this IFB, and fully comply with specifications, and be of the highest quality. In the event the material and/or services supplied to the City is found

to be defective or does not conform to specifications, the City reserves the right to cancel the order upon written notice to the contractor and return product to contractor at the contractor's expense.

19. **CODES AND REGULATIONS:** All products supplied and work performed within the scope of this request shall be supplied by the successful Bidder to all applicable current prevailing City, State and Federal codes and regulations.

20. **DELIVERY:** Bidders must indicate the number of calendar days required to make delivery after receipt of a purchase order. Delivery time may be considered in making an award. The City reserves the right to cancel any order, or any part of that order, without obligation if delivery is not made within the time(s) specified on the bid form.

    The City may grant additional time for delivery if the City is satisfied the delay is beyond the control of the vendor. Any request for time extension must be in writing and approved by the City's authorized representative.

    All deliveries shall be FOB Destination to the location listed on the purchase order or price agreement unless otherwise specified. Bidders may be requested to provide separate pricing for delivery of all items in this solicitation.

21. **THIRD PARTY FREIGHT SERVICE:** The City of Bentonville may, at its discretion, use a third party freight service to arrange for delivery of the goods ordered as a result of this solicitation. In this case, the freight terms will be FOB Destination/Third Party Prepaid.

22. **PRICE CHANGES ON CONTRACTS**: If this solicitation is for an estimated quantity of supplies, consideration in awarding bid for yearly contracts will be given:
    - First to Bidder offering firm prices for full contract period; and
    - Second to Bidder offering firm prices subject to market price adjustment.

23. **COPYRIGHT OR PATENT RIGHTS**: By submitting the bid, Bidder signifies that there has been no violation of copyrights or patent rights in manufacturing, producing or selling the goods shipped or ordered as a result of the bid, and Bidder agrees to hold the City harmless from any and all liability, loss, or expense caused by any such violation.

24. **CONFLICT OF INTEREST**: The contractor, by signing the bid form in the solicitation or by acceptance of any purchase order resulting from this solicitation, certifies that to the best of their knowledge or belief, no elected or appointed official of the City is financially interested, directly or indirectly, in the purchase of the goods or services specified on this order or in the contract.

25. **TAXES**: The City of Bentonville is not tax exempt from any taxes imposed by the State and/or Federal Government. Applicable taxes should be included on all vendor invoices.

26. **MANUFACTURER'S CERTIFICATION:** The City reserves the right to request from Bidders a separate manufacturer certification of all statements made in the bid. Failure to provide any requested certification may result in rejection of bid or termination of contract for which the Bidder must bear full liability.

27. **TERMINATION:** Subject to the following provisions, any contract resulting from this solicitation may be terminated by either party upon thirty (30) days advance written notice to the other party; but if any work or service is in progress but not completed as of the date of termination, then said contract may be extended upon written approval of the City until said work or services are completed and accepted. Types of termination include:

    1. Termination for Convenience
       In the event that the contract is terminated or cancelled upon request and for the convenience of the City, without the required thirty (30) days advance written notice, then the City shall negotiate reasonable termination costs, if applicable.

    2. Termination for Cause
       Termination by the City for cause, default or negligence on the part of the contractor shall be excluded from the foregoing provision; termination costs, if any, shall not apply. The thirty (30) days advance notice requirement is waived in the event of termination for cause.

    3. Termination Due to Unavailability of Funds
       When funds are not appropriated or otherwise made available to support continuation of performance, the contract shall be cancelled at the discretion of the City.

28. **W-9 REQUIREMENT:** The City of Bentonville requires a Form W-9 (Request for Taxpayer Identification Number and Certification), updated annually, from all contractors that do business with the City of Bentonville. The Form W-9 verifies the Tax Identification Number of the contractor so the City can correctly report to the IRS all funds paid to the contractor.

29. **DEFAULT OF CONTRACT:** In case of default by the contractor, the City may procure the items or services from other sources and hold the contractor responsible for any excess costs caused by such procurement. Failure of a Bidder to furnish the equipment, supplies, material, and/or services as specified is cause for elimination of the Bidder from the active Bidder's list for the products or services concerned.

30. **BID BOND:** If required in this solicitation, Bidders shall include a bid guarantee in the form of a bid bond, certified check, cashier's check in the amount of five percent (5%) of the base bid, payable without condition to the City of Bentonville. Personal or company checks are not acceptable The bid bond shall be accompanied by a power of attorney showing the authority of the person executing the bond on behalf of the surety company. Failure to include a bid bond or bid guarantee request with your bid submittal may be cause for rejection of your bid. Bid guarantees (submitted by certified or cashier's checks) will be returned to unsuccessful Bidders when the successful Bidder is determined and the contract is executed. **When noted, a certified check or bid bond in the amount of 5% of the total bid shall accompany bid if bid exceeds $35,000.00 [pursuant to Arkansas Code Annotated Section 22-9-203].**

31. **PERFORMANCE BOND:** At the discretion of the City, a performance bond may be required under the contract resulting from this solicitation. Such bond must be of a type and amount suitable for the nature of the commodity or services purchased and the dollar amount of the contract as indicated in this solicitation. The performance bond shall be for the duration of the contract, guaranteeing the faithful performance of the contract, and otherwise conditioned as required by law. Performance bond shall be accompanied by a power of attorney showing the authority of the person executing the bond on behalf of the surety company. Bond forms must be executed with a surety company licensed to do business in the State of Arkansas. The cost of the bond shall be included in the Bidder's offer.

32. **MODIFICATIONS FOR CHANGES**: No agreement or understanding to modify this solicitation and resultant purchase orders or contract shall be binding upon the City unless made in writing by the Purchasing Department of the City of Bentonville.

33. **ORDER OF PRECEDENCE:** In the event of an inconsistency between provisions of the solicitation, the inconsistency will be resolved in the following order: (a) the schedule; (b) Instructions to Bidders and General Conditions; (c) special provisions; (d) other provisions of the contract, whether incorporated by reference or otherwise; and, (e) the specifications.

34. **WARRANTY:** Supplies or services furnished as a result of this solicitation shall be covered by the most favorable commercial warranties, expressed or implied, that the Bidder and/or manufacturer gives to any customer. The rights and remedies provided herein are in addition to and do not limit any rights afforded to the City by any other clause of this bid. The City reserves the right to request from Bidders a separate manufacturer certification of all statements made in the bid.

35. **PAYMENT**: Payment for materials or services received under this contract will be made upon completion of delivery for each purchase order and submission of invoice to the Accounts Payable Department, 117 West Central, Bentonville, AR 72712. Normal pay periods for the City are every Friday.

38. **GOVERNING LAW:** Any agreement resulting from this solicitation shall be interpreted under and governed by the laws of the State of Arkansas.

39. **ESCALATION/DE-ESCALATION CLAUSE**: In the event prevailing market conditions warrant an adjustment in contract pricing, the following escalation/de-escalation clause shall be the only clause acceptable to the City:

    1. Contractor shall give written notice to the Purchasing Department of any proposed changes from contract prices not less than fifteen (15) calendar days prior to the effective date of price changes.
    2. Such notice must be accompanied by a copy of the supplier's notification to the contractor of a justifiable price change.
    3. No price escalation will be authorized in excess of the amount of the increase indicated on the supplier's notice.
    4. The approved price change shall be honored for all orders received by the contractor after the effective date of such price change.
    5. Approved price changes are not applicable to orders already issued and in process at time of price change.
    6. The City reserves the right to audit and/or examine any pertinent books, documents, papers, records, or invoice relating directly to the price increase after reasonable notice and during normal business hours.
    7. The Purchasing Department retains the right to determine whether or not such proposed price changes are in the best interests of the City.
    8. If in the opinion of the Procurement Department any proposed increase is found unacceptable, the Purchasing Department reserves the right to cancel the contract upon fifteen (15) calendar days' written notice.
    9. Contractors must tie any price change clause to an industry-wide or otherwise nationally recognized index or some other form of verifiable document. Contractor will put the Procurement Department on the mailing lists for such publications so the Purchasing Department can monitor said changes. Such membership will be at no cost to the City.

CITY OF BENTONVILLE, ARKANSAS ADMINISTRATIVE SERVICES
PURCHASING OFFICE
1000 SW 14th Street Bentonville, AR 72712
BIDDERS: NOTE ADDRESS CHANGE INFORMATION IN THIS SOLICITATION

SPECIFICATIONS SECTION

Bidder must indicate, "AS SPECIFIED", by placing an "X" in the designated space provided. Bidders must also indicate or describe any item being offered to the City that does not meet specification but is being offered to the city as being an "EQUIVALENT" or a "SUBSTITUTE" item, to the City's specifications. Bidder must also provide other information where indicated.

PRODUCT SPECIFICATIONS		
SPECIFICATION DESCRIPTION	**Bidder must use this column to indicate "AS SPECIFIED" by placing an "X" in this column. DO NOT use this column to present equivalent items.**	**Bidder must use this column to indicate/describe an "EQUIVALENT" or a "SUBSTITUTE" item being offered to the City.**
General:		
Quantity/Style: Approximately 2500 custom soccer style uniforms	x	
Fabric Blend: Jersey and Shorts Approximately 100% Polyester	x	
Fabric Blend: Socks Approximately 97% Polyester and 3% Rubber		
Color: Jerseys A minimum of 10 (ten) color options available *City's preference is 16 (sixteen) color options available; 10 color options is the required minimum.	x	
Color: Shorts Black	x	
Color: Socks A minimum of 10 (ten) color options available *City's preference is 16 (sixteen) color options available; 10 color options is the required minimum.	x	
Artwork: • Numbering on the back of the jersey, minimum 7 inches (7") in height; • Numbering will be limited at two(2) numbers per jersey; • One color logo on the back of the jersey, top middle placement; • One color logo on the front of the jersey, top left crest placement; • One color team name on the front of the jersey, center middle placement. Bi*dder will be asked, in a separate SPECIFICATIONS response field, to present the City with pricing for two and three color logos.*	Type text here	X Equivalent

SPECIFICATION DESCRIPTION	Bidder must use this column to indicate "AS SPECIFIED" by placing an "X" in this column. DO NOT use this column to present equivalent items.	Bidder must use this column to indicate/describe an "EQUIVALENT" or a "SUBSTITUTE" item being offered to the City.
Artwork Design: The awarded Bidder will provide artwork for Jersey names and numbers; some logos will be provided by the City. All artwork shall be approved by the City.	X	
Delivery: The first order shall be delivered to the City, no later than July 30, 2021.		
Uniforms shall be bundled by team and age group, upon delivery of all orders.	X	
Unisex Sizing - Example of break-down sizing and quantity **(NOT REPRESENTATIVE OF AN FINAL ORDER): City will work with the awarded Bidder to determine final quantities for each order the City places.**		
Fall Season Example Quantity and Sizing: Quantity: 2,252 Youth Extra Small - 174 Youth Small -614 Youth Medium - 608 Youth Large - 508 Adult Small - 254 Adult Medium - 52 Adult Large - 28 Adult Extra Large - 14	X	
Spring Season Example Quantity and Sizing: Quantity: 372 Youth Extra Small - 38 Youth Small - 118 Youth Medium - 109 Youth Large - 75 Adult Small - 23 Adult Medium - 6 Adult Large - 2 Adult Extra Large - 1	X	

CITY OF BENTONVILLE, ARKANSAS ADMINISTRATIVE SERVICES
PURCHASING OFFICE
1000 SW 14th Street Bentonville, AR 72712
BIDDERS: NOTE ADDRESS CHANGE INFORMATION IN THIS SOLICITATION

SPECIFICATIONS CONTINUED...

REQUIREMENT FOR SUBMISSION OF SAMPLE (RESPONSE REQUIRED) *All bidders are required to submit samples of all proposed products; however, it is not necessary to submit a sample for each color option. All samples become the property of the City of Bentonville.*
Have the required samples be included in the bid submission, or otherwise submitted prior to the bid opening date and time? ✓ **YES** _____ **NO**

STANDARD DELIVERY SPECIFICATIONS (RESPONSES REQUIRED)	
METHOD OF DELIVERY:	STANDARD UPS GROUND
DELIVERY COST (PER DELIVERY):	$ INCLUDED ON MAIN ORDER AND ORDERS OVER 20 UNITS
STANDARD PRODUCTION TIME:	STANDARD PRODUCTION TIME 150+ 7-10 BUSINESS DAYS
BIDDER'S DELIVERY REQUIREMENTS: Bidders must use this space to describe all delivery requirements, including but not limited to: order minimums and pricing for various order volumes if applicable.	IN ORDER TO MEET REQUIRED DELIVERY TIME SCORE SPORTS WOULD NEE LOGOS AND PRINTING FINALIZED BEFORE ORDER PLACEMENT AND 2-4 WEEKS FOR COMPLETE TURNAROUND, INCLUDING TIME IN TRANSIT. STANDARD UPS GROUND SHIPPING WILL BE INCLUDED ON MAIN ORDER ONLY. STANDARD UPS GROUND SHIPPING RATES FOR ADD-ONS WILL BE CALCULATED BY WEIGHT AND SPEED OF DELIVERY.

RUSH ORDER SPECIFICATIONS (RESPONSES REQUIRED) (NOT INCLUDED IN THE TOTAL BID PRICE)	
METHOD OF DELIVERY:	*Shipping charges are based on weight and speed of delivery and priority. Orders are shipped via UPS; you can choose Overnight, Second Day Air, or 3 Day Select for an additional charge.
RUSH ORDER SHIPPING COST:	$ *varies by requested method of delivery
STANDARD PRODUCTION TIME:	2-3 days production on orders of 1-20 jerseys.
RUSH ORDER PRODUCTION TIME:	Add on orders of 1-20 require 2-3 days production
COST FOR RUSH ORDER PRODUCTION: ***(In the event of higher than anticipated participation.)***	$ Shipping fees are determined by method of delivery chosen *(Please indicate if the cost is a flat fee or a per unit fee)*

SPECIFICATIONS CONTINUED...

ALTERNATE LOGO DESIGN PRICING OPTIONS – PER SHIRT (EXCLUDES TEAM NAME) Pricing should be conveyed as an additional charge, added to the one color logo bid prices in the event that the City wishes to incorporate additional colors in the logo.	
TWO-COLORED LOGO PRICING: **Logo Locations:** **Back of Jersey, Top Middle** **Front of Jersey, Top Left Crest**	Back Logo: 8" white/black "Sponsor/Team Name" Front Logo: 3.5" white/black "City logo" on left chest.	$ included* **ADDITIONAL CHARGE, PER SHIRT.**
THREE-COLORED LOGO PRICING: **Logo Locations:** **Back of Jersey, Top Middle** **Front of Jersey, Top Left Crest**	Back Logo: 8" 3-color "ponsor/Team Name" Front Logo: 3.5" 3-color "City logo" on left chest	$ 1.00/ application **ADDITIONAL CHARGE, PER SHIRT**

PRICE INCLUDES:
SCORE CHOICE SOCCER JERSEY
SYDNEY SHORTS NO. 117A
AND SOLID SOCKS NO. 800

*The first order must be **IN HAND** no later than July 30, 2021.*

[This space has been intentionally left blank]

CITY OF BENTONVILLE, ARKANSAS ADMINISTRATIVE SERVICES
PURCHASING OFFICE
1000 SW 14th Street Bentonville, AR 72712
BIDDERS: NOTE ADDRESS CHANGE INFORMATION IN THIS SOLICITATION

PRICING SHEET

Bid prices shall include all costs, including but not limited to: all taxes, production costs, material costs, and delivery fees* to the City of Bentonville, Arkansas. **The City of Bentonville tax rate is 9.5%**

***Inclusion of Delivery Fees:** Delivery fees shall be included in the Total Bid Prices, for standard orders based on the City's timeline. The delivery costs and rush production costs in the Specifications Sections of this IFB document will be used for smaller and/or single orders as needed throughout the term of this Agreement.

Delivery will be made to the City of Bentonville Community Center, located at 1101 Southwest Citizens Circle, Bentonville, Arkansas 72713.

The Bid Award will be based on the lowest and most responsible Total Bid Price. The Total Bid Price shall be used for bid comparison purposes only; final quantities will be determined after award.

Interpretation of Quantities.

The quantities appearing are approximate only and are prepared for the comparison of bids; actual quantities may change based on the number of participants season. Payment to the awarded Bidder will be made only for the actual quantities ordered and accepted, as specified.

2021-2022 SOCCER SEASON YOUTH AND ADULT SOCCER UNIFORMS, AS SPECIFIED				
Line Number	**Description**	**Unit Price (A)**	**Approx. Quantity (B)**	**Extended Price (A * B)**
1	Youth Extra Small (Jersey, Shorts, Socks Set)	$ 10.00	212	$ 2,120.00
2	Youth Small (Jersey, Shorts, Socks Set)	$ 10.00	732	$ 7,320.00
3	Youth Medium (Jersey, Shorts, Socks Set)	$ 10.00	717	$ 7,170.00
4	Youth Large (Jersey, Shorts, Socks Set)	$ 10.00	583	$ 5,830.00
5	Adult Small (Jersey, Shorts, Socks Set)	$ 10.00	277	$ 2,770.00
6	Adult Medium (Jersey, Shorts, Socks Set)	$ 10.00	58	$ 580.00
7	Adult Large (Jersey, Shorts, Socks Set)	$ 10.00	30	$ 300.00
8	Adult Extra Large (Jersey, Shorts, Socks Set)	$ 10.00	15	$ 100.00
PRICE INCLUDES: SCORE CHOICE SOCCER JERSEY SYDNEY SHORTS NO. 117A AND SOLID SOCKS NO. 800			**TOTAL BID PRICE** (The sum of the extended prices; used for bid comparison purposes only)	$ 26,190.00

Agenda Item Form

Date of City Council Meeting	**6/22/2021**
Department	**Parks and Recreation**
Submitted by	**David Wright**
Phone	**(479) 271.6813**

Item Type: *(Check All That Apply)*

☐ Budget Adjustment	☐ Change Order	☐ Informational	☐ Ordinance	☑ Resolution	☐ Bid Award

Recommendation/Suggested Action ***(Enter recommendation in space below):***

Resolution authorizing the Mayor to enter into an agreement with Hight Jackson and Associates to create a conceptual master plan and feasibility study for a future Adult Wellness Center in Bentonville. Hight Jackson and Associates was selected using the City's standard SOQ selection process for professional services in accordance with state law.

Estimated Cost	**$80,000**
Is this Item Budgeted?	☐ Yes ☑ No

If no, please explain how item will be funded ***(briefly explain in space below)*****:**

Combination of Fund Balance and Grant.

Memo

To:	City Council, Mayor Orman
From:	David Wright, Parks and Recreation Director
Date:	June 10, 2021
Re:	Agreement with Hight Jackson and Associates for a Conceptual Master Plan and Feasibility Study for a Future Adult Wellness Center in Bentonville

---

Parks and Recreation Staff is requesting City Council to approve a resolution authoring Mayor Orman to enter into an agreement with Hight Jackson and Associates for a conceptual plan and feasibility study for an adult wellness center.

This plan will evaluate the public need and desire to creating an adult wellness center in Bentonville. This process, very similar to the one conduced 10 years ago for the Bentonville Community Center, will include public meetings and input sessions, an evaluation of existing wellness opportunities for older adults and a potential business plan to help the City understand any and all future budget implications. Finally, the project will make recommendations on a future building design and costs of moving forward.

The initial though going into the project is the existing Downtown Activity Center may be the perfect canvas to begin this project. Although the project would certainly require an expansion of the existing facility, infrastructure is in place that would minimize construction expenses.

This project is consistent with the Play Bentonville Plan that calls out the need for additional wellness center space to compliment the Bentonville Community Center.

If approved, our team will work with Hight Jackson to host a series of public meetings to collect data and present potential concept plans for approval. The final report will be presented to City Council for a final approval and discussion of if / how we could move forward.

Approval of this study in no way obligates us for a future project. It is only a feasibility study to determine if the need exists in our community.

If you have any questions regarding this item, please call me at 479.464.7275 or email dwright@bentonvillear.com.

CITY OF BENTONVILLE, ARKANSAS
CITY OF BENTONVILLE ADMINISTRATIVE SERVICES – PURCHASING DEPARTMENT
1000 SW 14TH STREET
BENTONVILLE, ARKANSAS 72712

SERVICE CONTRACT:

CONCEPTUAL MASTER PLAN AND FEASIBILITY

STUDY FOR A FUTURE ADULT WELLNESS CENTER IN BENTONVILLE

THIS CONTRACT is made in Benton County, Arkansas, by and between the City of Bentonville, Arkansas, hereinafter "City," and Hight Jackson and Associates, hereinafter "Contractor" (collectively, the "Parties"), Witnesseth:

1. **DESCRIPTION.** Contractor was selected by City's Selection Committee in accordance with Arkansas State Law for the procurement and selection of professional services, utilizing the City's 2021 Annual Statement of Qualifications (SOQ) List. This Contract has been awarded to Contractor as result of Contractor's Proposal for the Preparation of a Conceptual Master Plan and Feasibility Study for a Future Adult Wellness Center in Bentonville, attached hereto as **Exhibit A**. The services shall consist of providing professional architectural services for the conceptual plan and feasibility study, as described herein and as are industry standard when performing the same or similar types of professional services.

2. **PRIMARY CONTACTS.** The primary contact for the Contractor shall be Larry Perkin. The primary contact for the City shall be the Parks and Recreation Director or his designee.

3. **CONTRACT TERM.** The term for this Contract shall be one (1) year, commencing on **June (month) 17th (day), 2021, and ending on June (month) 17th (day), 2021.** Any changes to the Term of this Contract shall be executed as an Amendment and signed by the Parties, and shall be in accordance with all applicable procurement laws and City purchasing guidelines; changes to the Term may require approval from the Bentonville City Council.

4. **PROCEDURES.** The services shall be conducted in accordance with this Contract, all Exhibits attached hereto, and as mutually agreed upon in writing between the Parties.

a. General. The Contractor shall conduct its operations in a manner consistent with industry standards and best practices in providing professional architectural services for the type of work included in this Contract and all attached Exhibits.

5. **FEES, EXPENSES, AND SCHEDULE.** The City agrees to pay Contractor based upon the fees outlined in **Exhibit A**. There shall be no change in fees permitted during the original Term of this Contract or for any extension or renewal of this Contract unless executed as a Change Order and approved by the Bentonville City Council prior to any change. Contractor agrees to only perform the type of services outlined in this Contract and the Exhibits attached hereto.

6. **ADDITIONAL SERVICES.** Any service outside of the services stated herein and in the Exhibits attached hereto must be pre-approved by the City, in writing, and in accordance with applicable procurement laws prior to any additional work proceeding.

7. **INVOICING.** Contractor shall submit invoices to the City's contact at the end of each month, for actual work performed. Invoices will be paid within 30 days from City's receipt of invoice.

8. **PAYMENT.**

a. Inaccurate Invoicing. In the event that the City becomes credibly informed that any representations of Contractor provided in its invoicing are wholly or partially inaccurate, the City may withhold payment of sums then, or in the future, otherwise due to Contractor until the inaccuracy and the cause thereof is corrected to the City's reasonable satisfaction.

b. Service Failure. In the event of a service failure, where the service performed is not in accordance with this Contract, the City may withhold sums otherwise due to Contractor that are specifically for the area in which the service failure occurred, until correction of the service failure is confirmed.

9. **TERMINATION FOR LACK OF FUNDS.** If, for whatever reason, adequate funding is not made available by City to support or justify continuation of the level of services to be provided by Contractor under this Contract, City may terminate or reduce the amount of services to be provided by Contractor under this Contract. In such event, City will notify Contractor in writing at least thirty (30) days in advance of such termination or reduction of services for lack of funds.

10. DISPUTE RESOLUTION. City and Contractor agree that disputes relative to the Services will first be addressed by negotiations between the Parties. If direct negotiations fail to resolve the dispute, the Party initiating the claim that is the basis for the dispute may take such steps as it deems necessary to protect its interests; provided, however, that notwithstanding any such dispute, Contractor will proceed with the services as per this Contract as if no dispute existed, and City will continue to make payment for Contractor's completed services; and provided further that no dispute will be submitted to arbitration without both Parties' express written consent.

11. SUBCONTRACTING. Contractor may not subcontract or assign any of the services to be performed under this Contract without first obtaining the written approval of the City. Unless otherwise stated in the written consent to an assignment, no assignment will release or discharge Contractor from any obligation under this Contract. Any person or firm proposed for subcontracting services under this Contract will maintain throughout the duration of the Contract, insurance as provided herein and will additionally maintain Professional Liability Insurance in a minimum amount of $1,000,000.00 and provide the City with certification thereof. Failure to obtain the City's written approval to subcontract any portion of this Contract shall be grounds for immediate termination of the Contract.

12. INSURANCE. Contractor will maintain, throughout the duration of this Contract and any subsequent renewal year, insurance as set forth below, which includes Workers' Compensation insurance, as required by Arkansas Statute, for all Contractor's employees or independently contracted workers. In the event that any interruption or change in insurance coverage may occur, the Contractor shall provide the City with thirty (30) days written notice of any such interruptions or changes. Failure to maintain the required insurance, as set forth herein will result in the direct breach of this Contract and subsequent termination.

a. **Minimum Insurance Requirements.**

   I. Workers' Compensation: Statutory Limits

   II. Comprehensive General Liability (Broad Form): $1,000,000.00

13. INDEMNIFICATION AND HOLD HARMLESS. For purposes of this Contract, Contractor agrees to indemnify, defend and hold harmless the City, its officers, appointees, employees, and agents from any and all loss, damage, liability or expense, of any nature whatsoever caused or incurred as a result of the negligence or other actionable fault of Contractor, its affiliates, subsidiaries, employees, agents, assignees, and subcontractors and their respective employees and agents. Contractor is not required hereunder to defend the City, its officers, appointees, employees, or agents from assertions that they were negligent, nor to indemnify and hold them harmless from liability based on the City's negligence.

14. TAXES, LICENSES AND PERMITS. The Contractor shall pay all Local, State and Federal taxes required by law and shall secure and maintain all permits and licenses necessary for the execution of the services described herein.

15. ENTIRE CONTRACT. This Contract, including all documents and exhibits included by reference herein, constitutes the entire Contract between the Parties and supersedes all prior agreements, whether oral or written, covering the same subject matter. This Contract may not be modified or amended except in writing mutually agreed upon and accepted by both Parties to this Contract.

16. NO THIRD PARTY BENEFICIARIES. Nothing contained herein will create a contractual relationship with, or any rights in favor of, any Third Party.

17. INDEPENDENT CONTRACTOR. Contractor is an independent contractor and is not an agent or employee of City.

18. COMPLIANCE WITH LAWS. Contractor will abide by all applicable federal, state and local laws, ordinances and regulations applicable at the time the services are rendered.

19. APPLICABLE LAW, JURISDICTION, VENUE. Interpretation of this Contract and disputes arising out of or related to this Contract will be subject to and governed by the laws of the State of Arkansas. Jurisdiction and venue for any suit arising out of or related to this Contract will be in the District Court of Benton County, Arkansas.

20. SEVERABILITY. If any provision of this Contract is determined to be void, invalid, unenforceable or illegal for whatever reason, such provision(s) will be null and void; provided, however, that the remaining provisions of this Contract will be unaffected and will continue to be valid and enforceable.

21. AMBIGUITY. If any ambiguity, inconsistency or conflict arises in the interpretation of this Contract, the same will be resolved by reference first to the terms and conditions of this Contract and then to Exhibit A.

The Parties hereto have caused this Contract to be executed this _____ (day) of _____(month), 2021.

CITY OF BENTONVILLE, ARKANSAS

By: _____.

Stephanie Orman, Mayor

By: [redacted]

Name(printed): Brian Jackson

Title: President

Hight Jackson and Associates

Address: 5201 W. Village Pkwy, Ste 300
Rogers, AR 72758

CITY OF BENTONVILLE, ARKANSAS
CITY OF BENTONVILLE ADMINISTRATIVE SERVICES – PURCHASING DEPARTMENT
1000 SW 14TH STREET
BENTONVILLE, ARKANSAS 72712

EXHIBIT A

Hight Jackson & Associates Proposal

Hight Jackson
ASSOCIATES

June 9, 2021

David Wright
Director, Parks and Recreation
City of Bentonville
215 SW A Street
Bentonville, Arkansas 72712

Re: Adult Wellness Center

Dear David,

Please find below a proposal for a feasibility study for a future Adult Wellness Center adjacent to your current offices on A Street. The purpose of the study is to determine the viability and need for this project in our community. We have partnered with Ballard*King & Associates and BRS Architecture to accomplish the following summary of services for this first phase of discovery.

1. Identify constraints and parameters
2. Market analysis
3. Public engagement meetings
4. Develop a facility program
5. Operations analysis
6. Conceptual design option drawings
7. Budget estimate for the project

We utilized this same process for the Bentonville Community Center and trust you found it effective. We are available at your convenience to discuss the scope of work. Hight Jackson will lead this effort and propose a lump sum fee of Eighty Thousand Dollars ($80,000.00), which includes the partners mentioned above.

Thank you for considering and engaging us in this valuable process to ensure this project is the best it can be for our community.

Sincerely,

[redacted]

Larry K. Perkin, Partner
Hight Jackson Associates PA

5201 Village Parkway, Suite 300 | Rogers, Arkansas 72758 | 479-464-4965 | www.hjarch.com

RESOLUTION NO. _____

A RESOLUTION AUTHORIZING THE MAYOR AND CLERK TO ENTER INTO AN AGREEMENT WITH HIGHT JACKSON AND ASSOCIATES TO CREATE A CONCEPTUAL MASTER PLAN AND FEASIBILITY STUDY FOR A FUTURE ADULT WELLNESS CENTER IN BENTONVILLE.

NOW, THEREFORE, BE IT RESOLVED BY THE CITY COUNCIL FOR THE CITY OF BENTONVILLE, ARKANSAS.

Section 1: That the Mayor and Clerk be and are hereby authorized to enter into an Agreement with Hight Jackson and Associates to create a conceptual master plan and feasibility study for a future Adult Wellness Center in Bentonville, as set forth in the agreement attached hereto as Exhibit "A".

Section 2: This resolution shall be in full force and effect from and after the date of its passage.

PASSED and APPROVED this _____ day of _____, 2021.

APPROVED:

_____
MAYOR

ATTEST:

_____
CITY CLERK

Agenda Item Form

Date of City Council Meeting	**6/22/2021**
Department	**Parks and Recreation**
Submitted by	**David Wright**
Phone	**(479) 271.6813**

Item Type: (*Check All That Apply*)

☑ Budget Adjustment	☐ Change Order	☐ Informational	☐ Ordinance	☐ Resolution	☐ Bid Award

Recommendation/Suggested Action *(Enter recommendation in space below):*

Council approval of a budget adjustment recognizing $40,000.00 in revenue via a Walton Family Foundation grant and allocating $80,000.00 in expenses to fund a study for a potential Adult Wellness Center in Bentonville.

Estimated Cost	**$40,000**
Is this Item Budgeted?	☐ Yes ☑ No

If no, please explain how item will be funded *(briefly explain in space below)* **:**

Combination of Fund Balance and grant award via Walton Family Foundation.

Budget Adjustment Request

Date of City Council Meeting	22-Jun
Department	Parks and Recreation
Submitted by	David Wright
Phone	(479) 271.6813

Purpose of Budget Adjustment *(Enter purpose in space below):*
Budget adjustment recgonizing $40,000 in grant revenue and $80,000 in expenses for conceptual plan and feasbility study for a potential adult wellness center in Bentonville.

General Ledger Account Information*				
Org (Department)	Object	Account Description	Revenue + (-)	Expense + (-)
105030	33810	Local Grant	$ 40,000.00	
105030	43210	Professional Services		$ 80,000.00
		Totals	$ 40,000.00	$ 80,000.00
		Net Impact on Fund Balance	$	(40,000.00)
*Final Account Number will be determined by Accounting Department after approval and purchase				

WALTON FAMILY
FOUNDATION

May 25, 2021

Mayor Stephanie Orman
City of Bentonville
117 West Central Boulevard
Bentonville, AR 72712

RE: Grant 00105401

Dear Mayor Orman,

It is my pleasure to inform you that the Walton Family Foundation, Inc. ("Foundation" or "WFF") has approved a grant in the amount of $40,000.00 to City of Bentonville ("Grantee"). This grant payment in contingent upon Grantee's approval to fund the other half ($40,000.00) of the study and is subject to the terms attached.

The grant funds are to support a feasibility study to determine the viability and needs for a future Adult Wellness Center on A Street in Bentonville.

Reporting: Please provide the Foundation with a report on November 15, 2021 including the completed study. This report should be submitted electronically using the Foundation's online grants management system. Further details will follow by email.

For all communications regarding this grant, your point of contact at the Foundation will be Becca Hazlewood, Senior Program Officer. Becca can be contacted via phone (479) 464-1574 or email becca@wffmail.com. Please reference Grant 00105401 in your communication.

Sincerely,

Caryl M. Stern
Executive Director

PO Box 2030
Bentonville, AR 72712

44 Cook Street, Suite 255
Denver, CO 80206

111 Town Square Place, Suite 420
Jersey City, NJ 07310

919 18th Street, NW, Suite 400
Washington, D.C. 20006

Grant Terms

By accepting a grant from the Walton Family Foundation ("Foundation"), your organization ("Grantee") acknowledges and agrees to the following terms regarding the grant:

1. **Grantee's Organizational Status:** Grantee represents to the Foundation that Grantee is an organization in good standing, is either an organization described in section 501(c)(3) of the Internal Revenue Code ("Code") or a governmental unit, and is not a "private foundation" described in section 509(a) of the Code.

2. **Accounting:** The Foundation encourages, whenever feasible, the deposit of grant funds in an interest-bearing account. For purposes of these grant terms, "grant funds" include the grant and any income earned thereon. Grantee will account for and maintain records of receipts and expenditures of the grant funds in accordance with generally accepted accounting principles.

3. **Restrictions on Grant Use:** Grantee will use the grant funds only for the purposes of the grant, and will comply with all applicable laws and regulations in administering and expending the grant funds. In no event will Grantee use any grant funds:
    a. to lobby for or against, or otherwise to attempt to influence, government legislation;
    b. to influence the outcome of any specific public election or to carry on, directly or indirectly, any voter registration drive; or
    c. to undertake any activity other than for a charitable, educational or other tax-exempt purpose specified in section 170(c)(2)(B) of the Code.

4. **Gratuities:** The Foundation desires that all of Grantee's resources be dedicated to accomplishing its philanthropic purposes. Therefore, Grantee agrees that it will not furnish the Foundation or its Board of Directors, officers, staff or affiliates with any type of benefit related to this grant including tickets, tables, memberships, commemorative items, recognition items, or any other benefit or gratuity of any kind.

5. **Grant Publicity:** Grant publicity related to this grant consistent with Grantee's normal practice is permitted, subject to the following provisions. The Foundation expects any announcements and other publicity to focus on Grantee's work and the project or issue funded by the grant. Recognition of the Foundation's role in funding the project is permitted, provided that the timing, content and strategic focus of such publicity is approved by the Foundation. Publicizing the grant and the Foundation in Grantee's publications and communications in a manner consistent with similar grants obtained by Grantee is permitted. If publicized or recognized, the grant should be listed as from the "Walton Family Foundation."

6. **Repayment:** Grantee agrees to repay to the Foundation any portion of the grant funds not used for the grant's purposes.

7. **Additional Information:** The Foundation may request Grantee to provide such information as is necessary or appropriate for the Foundation to determine that the grant funds are being used for the purposes intended. Grantee agrees to provide such information upon request.

Agenda Item Form

Date of City Council Meeting	**6/22/2021**
Department	**Parks and Recreation**
Submitted by	**David Wright**
Phone	**(479) 271.6813**

Item Type: (*Check All That Apply*)

☐ Budget Adjustment	☐ Change Order	☐ Informational	☐ Ordinance	☑ Resolution	☐ Bid Award

Recommendation/Suggested Action *(Enter recommendation in space below):*

Council approval of a Real Estate Transaction with Crystal Bridges Museum of American Art for land near Crystal Bridges Trail and the Bentonville Community Center.

Estimated Cost	
Is this Item Budgeted?	☐ Yes ☐ No

If no, please explain how item will be funded *(briefly explain in space below)* **:**

Memo

To:	City Council, Mayor Orman
From:	David Wright, Parks and Recreation Director
Date:	June 10, 2021
Re:	Council approval of real estate transaction involving property near Crystal Bridges Museum of American Art

---

City Staff recommends the approval of a real estate transaction with Crystal Bridges Museum of American Art (CBMAA).

This offer, proposed by Crystal Bridges, trades 1.11 acres of city property adjacent to the Crystal Bridges Trail to CBMAA and in return the City of Bentonville will receive 1.21 acres of land adjacent to the Bentonville Community Center.

The land the City will receive from CBMAA as part of this transaction will be used for a future trail that is part of the planned Grand Loop Trail System. This portion of this trail is expected to be ready for construction in late 2021. This immediate section will connect Bright Field Middle School, Willowbrook Elementary, Fulbright Jr. High, and a number of neighborhoods and rooftops to Citizens Park and the Bentonville Community Center.

The land CBMAA will receive from the City of Bentonville is currently hillside and wooded area or part of the existing public trail. This additional land provides CBMAA the space to accommodate their future expansion project. In addition, CBMAA is responsible for working with the City Of Bentonville to determine the best future location of the trail and reconstruct based on City and NACTO standards. All expenses of the real estate transaction are to be paid by CBMAA.

A map of the described areas are included in the agreement with CBMAA as Exhibit 1. If you have any questions regarding this item, please let me know. Please call me at 271.6813, or email dwright@bentonvillear.com.

1

LAND SWAP AGREEMENT
(CBMAA Parking Area)

This Land Swap Agreement (the "Agreement") is entered into by and among **CRYSTAL BRIDGES - MUSEUM OF AMERICAN ART, INC.**, a Delaware nonprofit corporation ("CBMAA"), **Bentonville/Bella Vista Trailblazer's Association, Inc.**, an Arkansas nonprofit corporation ("Trailblazers"), and **CITY OF BENTONVILLE, ARKANSAS** ("COB").

Subject to all the terms and conditions hereof, and in consideration for the mutual and separate covenants, warranties, representations, Ten and No/100 United States Dollars ($10.00) and other good and valuable consideration, the receipt and sufficiency of which is acknowledged by each of the parties, it is agreed:

1. **Real Estate Swap**. COB owns certain real property containing approximately 1.11 acres as indicated on Exhibit A (the "COB Tract"). Trailblazers owns certain real property containing approximately 1.21 acres as indicated on Exhibit A (the "CBMAA Tract"), and Trailblazers has agreed with CBMAA that such property can be included in this transaction. Subject to the satisfaction of the contingencies listed in Section 2, Trailblazers, CBMAA, and COB shall have the right to agree to a swap transaction where COB will transfer the COB Tract to CBMAA and Trailblazers will transfer the CBMAA Tract to COB (the "Swap"). The parties agree that the COB Tract and CBMAA Tract are of equal value.

2. **Contingencies**. All obligations upon the parties pursuant to this Agreement are expressly conditioned on occurrence of each and every one of the following.

a. *Inspections.* At each party's own expense and for 10 days after the Effective Date (as defined below) of this Agreement (the "Inspection Period"), each party may enter upon the others property for making such inspections as each party deems desirable. Any party may terminate this Agreement at any time during the Inspection Period, for any reason or no reason, and no party shall have any further obligation or liability under this Agreement;

b. *Marketable Title*. COB will have good, marketable and insurable title to the COB Tract free of all leases, liens and any other monetary encumbrances, subject only to matters of record and as would be disclosed by an accurate survey of the COB Tract. Trailblazers will have good, marketable and insurable title to the CBMAA Tract free of all leases, liens and any other monetary encumbrances, subject only to matters of record and as would be disclosed by an accurate survey of the CBMAA Tract. Either party may terminate this Agreement without further obligation or liability if the other party does not have the quality of title to its respective tract at Closing as required by this provision.

c. *Survey and Property Line Adjustment.* The COB Tract is part of a larger parcel. The parties understand that a property line adjustment will be required in order to facilitate this Swap, and CBMAA agrees to bear the responsibility for the survey and property line adjustment submittals and associated costs.

3. **Closing; Possession**. Waco Title Company (attention: Brian Blackman) will be the title agent and escrow agent for both parties. The Closing will be conducted by Waco Title Company on a date chosen by Trailblazers, CBMAA, and COB, such date not to be later than five (5) days after the occurrence of each of the Contingencies stated above, which the parties anticipate will occur by July 31, 2021 (the "Closing"). Each party will simultaneously convey its respective tract to the other by warranty deed. COB will take exclusive possession of the CBMAA Tract at Closing, and CBMAA will take exclusive possession of the COB Tract at Closing. Other than the warranties of title created by the respective special warranty

deeds, neither party makes any other warranties or representations regarding the tract it is conveying to the other pursuant to the Swap.

4. **Closing Costs**.

a. CBMAA in coordination with Trailblazers will satisfy and/or remove any tenancy rights and monetary liens on the CBMAA Tract; and COB will satisfy and/or remove any tenancy rights and monetary liens on the COB Tract.

b. Each party will pay the transfer tax due on the tract it is receiving pursuant to the Swap, if applicable. All other closing costs charged by Waco Title Company will be paid by CBMAA.

c. Taxes for both tracts will be prorated through Closing, if applicable.

d. Trailblazers, CBMAA, and COB shall each be responsible for their own legal, accounting, or other professional fees. Trailblazers, CBMAA, and COB each represent and warrant that they are not represented by a broker or agent.

5. **Trail Relocation**. CBMAA will cooperate with COB and Trailblazers to determine relocation of the portion of public trail disrupted by this Swap. The trail will meet current COB guidelines and will be designed per NACTO standards, which the parties all acknowledge understanding. CBMAA will be responsible for the cost of relocation design and construction for such portion of the public trail.

6. **Damage or Destruction; Condemnation**. The risk of loss or damage to a tract by casualty or condemnation shall remain with the party currently owning such tract until Closing. Either party shall have the right to terminate this Agreement without further obligation or liability if one of the tracts is substantially damaged or reduced in value by a casualty or condemnation.

7. **Remedies Upon Default**. If any party defaults under this Agreement, the non-defaulting party shall send the defaulting party written notice specifying such default and give such defaulting party a period of five (5) days after receiving the written notice to cure the default. If the default is uncured, then, as the non-defaulting party's sole and exclusive remedy, the non-defaulting party may pursue the remedy of specific performance without obtaining an award of monetary damages, all monetary damages being hereby waived and released by both parties. Alternatively, the non-defaulting party may terminate this Agreement without further obligation or liability.

8. **Notices**. All notices and demands hereunder shall be in writing and personally delivered or mailed by registered or certified United States mail, return receipt requested, postage prepaid to:

If to CBMAA:
Crystal Bridges Museum of American Art
600 Museum Way
Bentonville, AR 72712-4947

If to Bentonville:
City of Bentonville
1000 SW 14th Street
Bentonville, AR 72712

If to Trailblazers:
PO Box 2821
Bentonville, AR 72712

9. **Construction**. This Agreement shall bind and inure to the benefit of Trailblazers, CBMAA, COB, and their respective heirs, successors and assigns. This Agreement may be executed in multiple counterparts each of which shall be regarded as an original hereof but all of which together shall

constitute one in the same. This Agreement and all provisions contained herein have been jointly drafted (or reviewed and negotiated) and agreed to, and shall be deemed to have been prepared jointly by the parties hereto, each being sophisticated in transactions such as the one contemplated by this Agreement and each having the benefit and advice of legal counsel (or the opportunity to seek such counsel), and shall not be construed in favor of or against any party to this Agreement. If any part of this Agreement or any other agreement entered into pursuant hereto is contrary to, prohibited by or deemed invalid under applicable law or regulation, such provision shall be deemed inapplicable and deemed severed from this Agreement to the extent so contrary, prohibited or invalid but the remainder of this Agreement shall not be invalidated thereby and shall be given full force and effect so far as possible. This Agreement may be amended only by an instrument in writing signed by Trailblazers, COB, and CBMAA. This Agreement may be terminated only in accordance with the terms of this Agreement or by an instrument in writing signed by Trailblazers, COB, and CBMAA. No waiver of any of the provisions of this Agreement shall constitute a waiver of any other provision, nor shall any waiver be a continuing waiver. Except as expressly provided in this Agreement, no waiver shall be binding unless executed in writing by the party making the waiver. Time is of the essence.

10. **Other Acts**. Each party agrees to perform any further acts and deliver any additional documents which may be reasonably requested and necessary to carry out the provisions of this Agreement, including without limitation signing any additional documents needed to effectuate the intent of this Agreement.

[Signature Page Follows]

IN WITNESS WHEREOF this Agreement has been duly executed by the parties on this _____ day of _____, 2021 (the "Effective Date").

CBMAA:

CRYSTAL BRIDGES - MUSEUM OF AMERICAN ART, INC., a Delaware nonprofit corporation

By:_____
Name:_____
Title:_____

COB:

CITY OF BENTONVILLE, ARKANSAS

By:_____
Name:_____
Title:_____

Trailblazers:

BENTONVILLE/BELLA VISTA TRAILBLAZER'S ASSOCIATION, INC., an Arkansas nonprofit corporation

By:_____
Name:_____
Title:_____

EXHIBIT A

COB Tract: +/- 1.11 acres in Parcel Number 01-15202-001

CBMAA Tract: +/- 1.21 acres identified by Parcel Numbers 18-08917-001, 01-18130-000, and 01-18132-000

RESOLUTION NO. _____

A RESOLUTION AUTHORIZING THE MAYOR AND CLERK TO ENTER INTO A REAL ESTATE TRANSACTION WITH CRYSTAL BRIDGES MUSEUM OF AMERICAN ART FOR LAND NEAR CRYSTAL BRIDGES TRAIL AND THE BENTONVILLE COMMUNITY CENTER.

WHEREAS, this offer, proposed by Crystal Bridges, trades 1.11 acres of city property adjacent to the Crystal Bridges Trail to CBMAA and in return the City of Bentonville will receive 1.21 acres of land adjacent to the Bentonville Community Center.

NOW, THEREFORE, BE IT RESOLVED BY THE CITY COUNCIL FOR THE CITY OF BENTONVILLE, ARKANSAS.

Section 1: That the Mayor and Clerk be and are hereby authorized to enter into a Real Estate Transaction with Crystal Bridges Museum of American Art for land near Crystal Bridges Trail and the Bentonville Community Center, as set forth in the agreement attached hereto as Exhibit "A".

Section 2: This resolution shall be in full force and effect from and after the date of its passage.

PASSED and APPROVED this _____ day of _____, 2021.

APPROVED:

_____
MAYOR

ATTEST:

_____
CITY CLERK

Agenda Item Form

Date of City Council Meeting	**6/22/2021**
Department	**Parks and Recreation**
Submitted by	**David Wright**
Phone	**(479) 271.6813**

Item Type: (*Check All That Apply*)

☐ Budget Adjustment	☐ Change Order	☐ Informational	☐ Ordinance	☑ Resolution	☐ Bid Award

Recommendation/Suggested Action *(Enter recommendation in space below):*

Council approval of a Real Estate Transaction with Crystal Bridges Museum of American Art for land near SE 5th Street and the Momentary.

Estimated Cost	
Is this Item Budgeted?	☐ Yes ☐ No

If no, please explain how item will be funded *(briefly explain in space below)* **:**

Memo

To:	City Council, Mayor Orman
From:	David Wright, Parks and Recreation Director
Date:	June 10, 2021
Re:	Council approval of real estate transaction involving property near Crystal Bridges Museum of American Art

---

City Staff recommends the approval of a real estate transaction with Crystal Bridges Museum of American Art (CBMAA) for land adjacent to SE 5th Street, near the Momentary.

This offer, proposed by Crystal Bridges, trades .12 acres of city property adjacent to the Town Branch Trail to CBMAA and in return the City of Bentonville will receive .36 acres of land adjacent to Tiger Blvd.

The land the City will receive from CBMAA as part of this transaction is adjacent to land the City currently owns on Tiger Blvd. This property will add to the current hillside property owned by the City and managed by Parks and Recreation. The land currently includes has mountain bike trails connecting Park Springs to Slaughter Pen. Maybe more importantly, the land is being used as additional tree canopy and preservation space. This additional .36 acres will join this property with no immediate plans.

The land CBMAA will receive from the City of Bentonville is land on the west side of Town Branch. CMBAA owns the property on both side of this piece and they currently maintain the space. There is no way for the City to access the land without crossing land owned by CBMAA. During construction of the Momentary, CBMAA constructed a trail connecting the Momentary and 8th Street Market to the Razorback Greenway.

There are a few benefits for this this transaction. In addition to the additional hillside property along Tiger Blvd, this transaction cleans up a property line issue with this the land currently owned by the City. The Razorback Greenway Trail is on the other side of the creek and we have no reason to own this small triangle of property.

A map of the described areas are included in the agreement with CBMAA as Exhibit 1. If you have any questions regarding this item, please let me know. Please call me at 271.6813, or email dwright@bentonvillear.com.

Attachment:

Offer and Acceptance from Crystal Bridges Museum of American Arts

LAND SWAP AGREEMENT
(Momentary Area)

This Land Swap Agreement (the "Agreement") is entered into by and between **CRYSTAL BRIDGES - MUSEUM OF AMERICAN ART, INC.**, a Delaware nonprofit corporation ("CBMAA"), and **CITY OF BENTONVILLE, ARKANSAS** ("COB").

Subject to all the terms and conditions hereof, and in consideration for the mutual and separate covenants, warranties, representations, Ten and No/100 United States Dollars ($10.00) and other good and valuable consideration, the receipt and sufficiency of which is acknowledged by CBMAA and COB, it is agreed:

1. **Real Estate Swap**. COB owns certain real property containing approximately 0.12 acres as indicated on Exhibit A (the "COB Tract"). CBMAA owns certain real property containing approximately 0.36 acres as indicated on Exhibit A (the "CBMAA Tract"). Subject to the satisfaction of the contingencies listed in Section 2, CBMAA and COB shall have the right to agree to a swap transaction where COB will transfer the COB Tract to CBMAA and CBMAA will transfer the CBMAA Tract to COB (the "Swap"). The parties agree that the COB Tract and CBMAA Tract are of equal value.

2. **Contingencies**. All obligations upon the parties pursuant to this Agreement are expressly conditioned on occurrence of each and every one of the following.

a. *Inspections.* At each party's own expense and for 10 days after the Effective Date (as defined below) of this Agreement (the "Inspection Period"), each party may enter upon the others property for making such inspections as each party deems desirable. Either party may terminate this Agreement at any time during the Inspection Period, for any reason or no reason, and neither party shall have any further obligation or liability under this Agreement;

b. *Marketable Title.* COB will have good, marketable and insurable title to the COB Tract free of all leases, liens and any other monetary encumbrances, subject only to matters of record and as would be disclosed by an accurate survey of the COB Tract. CBMAA will have good, marketable and insurable title to the CBMAA Tract free of all leases, liens and any other monetary encumbrances, subject only to matters of record and as would be disclosed by an accurate survey of the CBMAA Tract. Either party may terminate this Agreement without further obligation or liability if the other party does not have the quality of title to its respective tract at Closing as required by this provision.

c. *Survey and Property Line Adjustment.* The COB Tract is part of a larger parcel. The parties understand that a property line adjustment will be required in order to facilitate this Swap, and CBMAA agrees to bear the responsibility for the survey and property line adjustment submittals and associated costs.

3. **Closing; Possession**. Waco Title Company (attention: Brian Blackman) will be the title agent and escrow agent for both parties. The Closing will be conducted by Waco Title Company on a date chosen by CBMAA and COB, such date not to be later than five (5) days after the occurrence of each of the Contingencies stated above, which the parties anticipate will occur by July 31, 2021 (the "Closing"). Each party will simultaneously convey its respective tract to the other by warranty deed. COB will take exclusive possession of the CBMAA Tract at Closing, and CBMAA will take exclusive possession of the COB Tract at Closing. Other than the warranties of title created by the respective special warranty deeds, neither party makes any other warranties or representations regarding the tract it is conveying to the other pursuant to the Swap.

4. **Closing Costs**.

a. CBMAA will satisfy and/or remove any tenancy rights and monetary liens on the CBMAA Tract; and COB will satisfy and/or remove any tenancy rights and monetary liens on the COB Tract.

b. Each party will pay the transfer tax due on the tract it is receiving pursuant to the Swap, if applicable. All other closing costs charged by Waco Title Company will be paid by CBMAA.

c. Taxes for both tracts will be prorated through Closing, if applicable.

d. CBMAA and COB shall each be responsible for their own legal, accounting, or other professional fees. CBMAA and COB both represent and warrant that they are not represented by a broker or agent.

5. **Reserved**.

6. **Damage or Destruction; Condemnation**. The risk of loss or damage to a tract by casualty or condemnation shall remain with the party currently owning such tract until Closing. Either party shall have the right to terminate this Agreement without further obligation or liability if one of the tracts is substantially damaged or reduced in value by a casualty or condemnation.

7. **Remedies Upon Default**. If either party defaults under this Agreement, the non-defaulting party shall send the other written notice specifying such default and give such defaulting party a period of five (5) days after receiving the written notice to cure the default. If the default is uncured, then, as the non-defaulting party's sole and exclusive remedy, the non-defaulting party may pursue the remedy of specific performance without obtaining an award of monetary damages, all monetary damages being hereby waived and released by both parties. Alternatively, the non-defaulting party may terminate this Agreement without further obligation or liability.

8. **Notices**. All notices and demands hereunder shall be in writing and personally delivered or mailed by registered or certified United States mail, return receipt requested, postage prepaid to:

If to CBMAA:	If to Bentonville:
Crystal Bridges Museum of American Art	City of Bentonville
600 Museum Way	1000 SW 14th Street
Bentonville, AR 72712-4947	Bentonville, AR 72712

9. **Construction**. This Agreement shall bind and inure to the benefit of CBMAA, COB, and their respective heirs, successors and assigns. This Agreement may be executed in multiple counterparts each of which shall be regarded as an original hereof but all of which together shall constitute one in the same. This Agreement and all provisions contained herein have been jointly drafted (or reviewed and negotiated) and agreed to, and shall be deemed to have been prepared jointly by the parties hereto, each being sophisticated in transactions such as the one contemplated by this Agreement and each having the benefit and advice of legal counsel (or the opportunity to seek such counsel), and shall not be construed in favor of or against any party to this Agreement. If any part of this Agreement or any other agreement entered into pursuant hereto is contrary to, prohibited by or deemed invalid under applicable law or regulation, such provision shall be deemed inapplicable and deemed severed from this Agreement to the extent so contrary, prohibited or invalid but the remainder of this Agreement shall not be invalidated thereby and shall be given full force and effect so far as possible. This Agreement may be amended only by an instrument in writing signed by both COB and CBMAA. This Agreement may be terminated only in accordance with the terms

of this Agreement or by an instrument in writing signed by both COB and CBMAA. No waiver of any of the provisions of this Agreement shall constitute a waiver of any other provision, nor shall any waiver be a continuing waiver. Except as expressly provided in this Agreement, no waiver shall be binding unless executed in writing by the party making the waiver. Time is of the essence.

10. **Other Acts**. Each party agrees to perform any further acts and deliver any additional documents which may be reasonably requested and necessary to carry out the provisions of this Agreement, including without limitation signing any additional documents needed to effectuate the intent of this Agreement.

[Signature Page Follows]

IN WITNESS WHEREOF this Agreement has been duly executed by the parties on this _____ day of _____, 2021 (the "Effective Date").

CBMAA:

CRYSTAL BRIDGES - MUSEUM OF AMERICAN ART, INC., a Delaware nonprofit corporation

By:_____
Name:_____
Title:_____

COB:

CITY OF BENTONVILLE, ARKANSAS

By:_____
Name:_____
Title:_____

EXHIBIT A

COB Tract: +/- 0.12 acres in Parcel Number 01-00677-005

CBMAA Tract: +/- 0.36 acres identified as Parcel Number 01-04534-005

RESOLUTION NO. _____

A RESOLUTION AUTHORIZING THE MAYOR AND CLERK TO ENTER INTO A REAL ESTATE TRANSACTION WITH CRYSTAL BRIDGES MUSEUM OF AMERICAN ART FOR LAND NEAR SE 5TH STREET AND THE MOMENTARY.

WHEREAS, this offer, proposed by Crystal Bridges, trades .12 acres of city property adjacent to the Town Branch Trail to CBMAA and in return the City of Bentonville will receive .36 acres of land adjacent to Tiger Blvd.

NOW, THEREFORE, BE IT RESOLVED BY THE CITY COUNCIL FOR THE CITY OF BENTONVILLE, ARKANSAS.

Section 1: That the Mayor and Clerk be and are hereby authorized to enter into a Real Estate Transaction with Crystal Bridges Museum of American Art for land near SE 5th Street and the Momentary, as set forth in the agreement attached hereto as Exhibit "A".

Section 2: This resolution shall be in full force and effect from and after the date of its passage.

PASSED and APPROVED this _____ day of _____, 2021.

APPROVED:

_____
MAYOR

ATTEST:

_____
CITY CLERK

Agenda Item Form

Date of City Council Meeting	**6/22/2021**
Department	**Administration**
Submitted by	**Stephanie Orman**
Phone	**(479) 271-5966**

Item Type: (*Check Applicable Item Type*)					
☐ Budget Adjustment	☐ Change Order	☑ Informational	☐ Ordinance	☐ Resolution	☐ Bid Award

Recommendation/Suggested Action *(Enter recommendation in space below)*:

Mayor Stephanie Orman is recommending the appointment of Lisa Kelley to Bentonville's Off-Street Parking District #3 Commission. Tom McCoy is resigning from his position upon the appointment of Ms. Kelley.

Estimated Cost	**$**
Is this Item Budgeted?	☐ Yes ☐ No

If no, please explain how item will be funded *(briefly explain in space below)* **:**

June 17, 2021

To: City Council Members & City Clerk

From: Mayor Stephanie Orman

Subject: Appointment of Lisa Kelley to the Off-Street Parking District #3 Commission.

I recommend Lisa Kelley for appointment to Bentonville's Off-Street Parking District #3 Commission. Ms. Kelley will be filling the position being vacated by Tom McCoy on June 22, 2021.

SO

Stephanie Orman

OFF-STREET PARKING DEVELOPMENT DISTRICT #3
OF THE CITY OF BENTONVILLE
POST OFFICE BOX 1860
BENTONVILLE, AR 72712

To:	The Honorable Stephanie Orman, Mayor of the City of Bentonville, Arkansas
From:	Mike Brown, Acting Secretary of the Off-Street Parking Development District #3 of the City of Bentonville
RE:	Resignation of Commissioner Tom McCoy and Nomination of Lisa Kelly as Commissioner of the District
Date:	June 4, 2021

At the April 26, 2021 meeting of the Board of Commissioners of the Off-Street Parking Development District #3 of the City of Bentonville (the "**District**"), long time Commissioner Tom McCoy gave his resignation as a Commissioner of the District to be effective on the appointment of a replacement Commissioner by the City of Bentonville.

At the same meeting, the remaining Commissioners voted to nominate Lisa Kelly to fill the Commissioner position currently held by Tom McCoy. Ms. Kelly is an owner of real property or is the designated representative of a legal entity owning property within the District, as required by Ark. Code Ann. § 14-88-301. Ms. Kelly has also been attending meetings of the Board of Commissioners in order to prepare for her requested appointment.

In accordance with Ark. Code Ann. § 14-88-303, the District requests that the Mayor nominate Lisa Kelly for approval by the City Council of Bentonville, Arkansas to fill the vacancy in the position of Commissioner of the District, such appointment to be effective upon approval by the City Council (at which time Commissioner Tom McCoy's resignation will be effective).

April 26, 2021

City of Bentonville
Mayor Stephanie Orman
117 West Central Avenue
Bentonville, AR 72712

Mayor Orman,

I have made the decision to resign as commissioner of the Bentonville Off Street Parking District #3. My resignation will be effective as soon as a replacement commissioner is nominated by the mayor and approved by the City Council.

I am pleased with all that has been accomplished since Jim started the parking districts many years ago. I am certain it is one of the main reasons that has allowed Downtown Bentonville to grow and prosper so well.

It has been my pleasure to serve. Thanks to you for your continued leadership to make downtown Bentonville the great destination it has become.

Sincerely,

[redacted]

Tom McCoy

cc: Randy Lawson
Chris Seay
Jim Walton

Agenda Item Form

Date of City Council Meeting	**6/22/2021**
Department	**Administration**
Submitted by	**Stephanie Orman**
Phone	**479-271-5966**

Item Type: (*Check Applicable Item Type*)					
☐ Budget Adjustment	☐ Change Order	☐ Informational	☑ Ordinance	☐ Resolution	☐ Bid Award

Recommendation/Suggested Action *(Enter recommendation in space below)*:

Ordinance to amend the pay plan to change the title of Community Relations and Economic Development Director to the new title of Director of Administration and also to add one position as Associate Staff Attorney to the pay plan as a grade 37.

Estimated Cost	**$**
Is this Item Budgeted?	☐ Yes ☑ No

If no, please explain how item will be funded *(briefly explain in space below)* :

Budget will be transferred from other Administration accounts and Airport accounts for the cost of these changes in 2021.

June 10th, 2021

To: Mayor's Staff

From: Mayor Stephanie Orman

Subject: Announcement from Mayor Orman

The employment contract with the current Airport Manager ends July 31, 2021. The Airport Manager serves both as the airport manager and as legal counsel for the airport. I have decided not to seek renewal of this third party contract. After much consideration, I feel it is time for a new approach at the airport and this shift coincides with other changes that I believe are necessary in the City.

- Effective immediately I am moving the management responsibility of the Airport under our Community Relations/Economic Development Director. The current Airport Manager will be expected to fulfill contract job responsibilities in association with the current contract length and work to insure a smooth transition of information and files during this transition time.
- I am also expanding the job responsibilities of the Community Relations/Economic Development Director and moving the Human Resources Department under this Department Head function.
- This position will continue to operate as the Department Head for Community Relations and Economic Development for the City of Bentonville.
- In conjunction, with the extended responsibilities above, I am requesting that the City Council approve a title change for this position to Director of Administration.

The person in this position has already been actively involved in employee engagement and taken the lead on our Bentonville Together initiative. This position will help strengthen our Human Resources Department during an unprecedented time of growth in our City. In addition, this position will continue to work with all departments to ensure that the communication and economic development directives that already lie under this position are implemented in correlation with direction from the Mayor and City Council.

Also with this change, I started to evaluate how to handle needed legal counsel for the airport and provide additional resources for legal support for the planning department. To continue supporting both of these areas, we need to add an additional staff attorney by reallocating funds from both the airport manager contract and funds

REGISTER AT REALTYCREATSITE.COM

used for 3rd party legal services. This position will provide legal support for the airport and the planning department, along with drafting of city contracts which has become a very detailed and expanded daily job as the city has grown.

Currently, our legal department has only one staff attorney and additional workload is not feasible. I am asking City Council to move available budget funds for the remainder of the year from their respective accounts, to salaries and benefits within the Administration department to cover the cost of the new legal employee for 2021.

While we are eliminating the Airport Manager contract, and moving responsibilities to the Director of Administration, we recognize that the airport is a team supported department. The Airport Manager's role as legal counsel for the airport will also require help and support from our legal department. I appreciate in advance the increasing role that department will play as we move away from contract employment and add a staff member in the Legal Department to support the airport and other areas in the City that have seen significant growth for legal review and consultation to move items forward in a growing city. I also greatly appreciate the work that the Transportation Director and Engineering departments have done for the airport and they will be critical to help support the Director of Administration's role for the airport as we move forward with this transition. If there are any questions regarding the above information, please reach out to my office for clarification.

Thank You-

Mayor Orman

REGISTER AT REALTYCREATSITE.COM

ORDINANCE NO. _____

AN ORDINANCE AMENDING THE PAY PLAN FOR THE CITY OF BENTONVILLE, ARKANSAS.

NOW, THEREFORE, BE IT ORDAINED BY THE CITY COUNCIL FOR THE CITY OF BENTONVILLE, ARKANSAS.

Section 1: That the position of "Community Relations and Economic Development Director" should be and the same is hereby amended to the title of "Director of Administration".

Section 2: That the position of "Associate Staff Attorney", grade 37, should be and the same is hereby added to the City of Bentonville Pay Plan.

PASSED and APPROVED this _____ day of _____, 2021.

APPROVED:

_____
MAYOR

ATTEST:

_____
CITY CLERK

Agenda Item Form

Date of City Council Meeting	**6/22/2021**
Department	**Administration**
Submitted by	**Stephanie Orman**
Phone	**479-271-5966**

Item Type: (*Check Applicable Item Type*)					
☑ Budget Adjustment	☐ Change Order	☐ Informational	☐ Ordinance	☐ Resolution	☐ Bid Award

Recommendation/Suggested Action ***(Enter recommendation in space below)*:**

Budget Adjustment to move funds from Airport Professional Services and Administration Professional Services to cover the cost of staffing changes for the Mayor's Office in relation to ending the 3rd Party Airport Manager contract and reassigning roles to current staff and adding an additional staff member.

Estimated Cost	
Is this Item Budgeted?	☐ Yes ☑ No

If no, please explain how item will be funded ***(briefly explain in space below)*** **:**

Budget will be transferred from other Administration accounts and Airport accounts for the cost of these changes in 2021.

Budget Adjustment Request

Date of City Council Meeting	6/22/2021
Department	Administration
Submitted by	Stephanie Orman
Phone	(479) 271-5966

Purpose of Budget Adjustment *(Enter purpose in space below):*
Budget Adjustment to move funds from Airport Professional Services and Administration Professional Services to cover the cost of staffing changes for the Mayor's Office in relation to ending the 3rd Party Airport Manager contract and reassigning roles to current staff and adding an additional staff member.

General Ledger Account Information*				
Org (Department)	Object	Account Description	Revenue + (-)	Expense + (-)
101010	43210	Professional Services		$ (25,000.00)
101650	43210	Professional Services		$ (58,000.00)
101010	41077	Salaries		$ 59,500.00
101010	41577	Benefits		$ 23,500.00
		Totals	$ -	$ -
		Net Impact on Fund Balance	$	-
*Final Account Number will be determined by Accounting Department after approval and purchase				

June 10th, 2021

To: Mayor's Staff

From: Mayor Stephanie Orman

Subject: Announcement from Mayor Orman

The employment contract with the current Airport Manager ends July 31, 2021. The Airport Manager serves both as the airport manager and as legal counsel for the airport. I have decided not to seek renewal of this third party contract. After much consideration, I feel it is time for a new approach at the airport and this shift coincides with other changes that I believe are necessary in the City.

- Effective immediately I am moving the management responsibility of the Airport under our Community Relations/Economic Development Director. The current Airport Manager will be expected to fulfill contract job responsibilities in association with the current contract length and work to insure a smooth transition of information and files during this transition time.
- I am also expanding the job responsibilities of the Community Relations/Economic Development Director and moving the Human Resources Department under this Department Head function.
- This position will continue to operate as the Department Head for Community Relations and Economic Development for the City of Bentonville.
- In conjunction, with the extended responsibilities above, I am requesting that the City Council approve a title change for this position to Director of Administration.

The person in this position has already been actively involved in employee engagement and taken the lead on our Bentonville Together initiative. This position will help strengthen our Human Resources Department during an unprecedented time of growth in our City. In addition, this position will continue to work with all departments to ensure that the communication and economic development directives that already lie under this position are implemented in correlation with direction from the Mayor and City Council.

Also with this change, I started to evaluate how to handle needed legal counsel for the airport and provide additional resources for legal support for the planning department. To continue supporting both of these areas, we need to add an additional staff attorney by reallocating funds from both the airport manager contract and funds

REGISTER AT REALTYCREATSITE.COM

used for 3rd party legal services. This position will provide legal support for the airport and the planning department, along with drafting of city contracts which has become a very detailed and expanded daily job as the city has grown.

Currently, our legal department has only one staff attorney and additional workload is not feasible. I am asking City Council to move available budget funds for the remainder of the year from their respective accounts, to salaries and benefits within the Administration department to cover the cost of the new legal employee for 2021.

While we are eliminating the Airport Manager contract, and moving responsibilities to the Director of Administration, we recognize that the airport is a team supported department. The Airport Manager's role as legal counsel for the airport will also require help and support from our legal department. I appreciate in advance the increasing role that department will play as we move away from contract employment and add a staff member in the Legal Department to support the airport and other areas in the City that have seen significant growth for legal review and consultation to move items forward in a growing city. I also greatly appreciate the work that the Transportation Director and Engineering departments have done for the airport and they will be critical to help support the Director of Administration's role for the airport as we move forward with this transition. If there are any questions regarding the above information, please reach out to my office for clarification.

Thank You-

Mayor Orman

REGISTER AT REALTYCREATSITE.COM

Agenda Item Form

Date of City Council Meeting	**6/22/2021**
Department	**Finance/Accounting**
Submitted by	**Jake Harper**
Phone	**479-271-6781**

Item Type: (*Check Applicable Item Type*)

☐ Budget Adjustment	☐ Change Order	☐ Informational	☑ Ordinance	☐ Resolution	☐ Bid Award

Recommendation/Suggested Action *(Enter recommendation in space below)*:

Approve Ordinance for a Bid Waiver to Stephens Insurance for property insurance for the period of July 8, 2021 through July 8, 2022. This policy will be with Affiliated FM. Stephens Insurance acts as the City's broker for property insurance, reaching out to insurance carriers and recommending the carrier chosen. See attached proposal. The total cost of property insurance is $373,275 with all but $21,959 budgeted. The unbudgeted amount is related to the additional funds to cover Electric Department replacement cost increases. The remaining amount of $21,959 will paid from Utility Fund Reserves.

Estimated Cost	**$ 373,275.00**
Is this Item Budgeted?	☐ Yes ☐ No

If no, please explain how item will be funded *(briefly explain in space below)* **:**

The total cost of property insurance is $373,275 with all but $21,959 budgeted. The unbudgeted amount is related to the additional funds to cover Electric Department replacement cost increases. The remaining amount of $21,959 will paid from Utility Fund Reserves.

Waiver of Bid Request

Date of City Council Meeting	6/22/2021
Department	Finance/Accounting
Submitted by	Jake Harper
Phone	479-271-6781

Vendor	Stephens Insurance
Total Cost	$ 373,275.00

Description of Purchase *(This should include a detailed description of the type of material, equipment or service that is being requested including make, model, year & options if applicable. Enter details in space below):*

Property Insurance purchased through Stephens Insurance. The total cost of property insurance is 373,275 with all but this amount of $21,959 related to the needed funds to cover Electric Department value changes.

Justification *(Enter justification in space below):*

Property Insurance is obtained each year through Stephens Insurance. Stephens Insurance acts as an insurance broker, contacting insurance carriers and proposing a carrier that provides the City with needed coverage. This bid waiver is to purchase property insurance through Stephens Insurance and the carrier will be Affliated FM which has been our carrier the last 3 years.

CITY OF BENTONVILLE

TERM: 7/8/2021-7/8/2022

Presented by:

Ron Adams President, Fayetteville Office

Wes Adams, Vice President, Fayetteville Office

Stephens

Your Service Team

Primary Service Team			
Insurance Advisor	Ron Adams	(479) 718-7446	ron.adams@stephens.com
Insurance Advisor	Wes Adams	(479) 718-7408	wes.adams@stephens.com
Account Manager	Sarah Day Goolsby	(479) 718-7411	sarah.goolsby@stephens.com
Customer Service Agent	Mason Lace	(479) 718-7447	mason.lace@stephens.com

Additional Service Team Members			
Bonds	Elizabeth Browning	(501) 377-8442	elizabeth.browning@stephens.com
Claims Management	Denver Fletcher	(501) 377-3431	denver.fletcher@stephens.com
Claims Management	Courtney McLarty	(501) 377-8378	courtney.mclarty@stephens.com
Claims Management	Heba Brown	(501) 377-8326	heba.brown@stephens.com
General Counsel	Patrick McAlpine	(501) 377-8141	patrick.mcalpine@stephens.com
Loss Control	David Nigus	(501) 377-8845	david.nigus@stephens.com
Loss Control	Preston Keller	(501) 377-2302	preston.keller@stephens.com
Marketing	Curtis Lassiter	(501) 377-2360	curtis.lassiter@stephens.com
Management Liability (Directors & Officers)	Kevin McBride	(214) 258-2745	kevin.mcbride@stephens.com

INSURANCE MARKET UPDATE

First Quarter, 2021

What We Are Watching

COVID-19 Pandemic

- As an economic loss event, COVID-19 is unprecedented for companies and insurers alike.
- The insurance market was already "hardening" before the onset of COVID-19, which only adds another layer of uncertainty.
- Full impact on the industry remains unknown, but the potential for many insurers to suffer both underwriting losses and investment losses will likely extend the hard market.

Escalating Social Inflation, Civil Unrest

- New attitudes mean injured parties are more likely to bring litigation against companies — and win.
- In turn, expect more (and more severe) liability claims, squeezing insurers as they try to cover growing losses.
- Recent events (protests, riots, etc.) highlight the growing civil unrest throughout the country, which is now a top political risk for companies.

New Year, New Administration

- Democrat and former U.S. Vice President Joe Biden has taken over as President of the United States.
- While it appears unlikely that President Biden's administration will prioritize a systematic financial industry crackdown, he is expected to take a stricter line than Republican incumbent Donald Trump, which could impact the industry in coming years.

Source: Business Insurance, Insurance Journal, PropertyCasualty360

CONFIDENTIAL AND PROPRIETARY INFORMATION OF STEPHENS INSURANCE, LLC

What We Are Watching continued

Climate Change, Natural Disasters

- The last few years have seen unprecedented impacts from natural disasters, both in frequency and severity.
- Whether recent years will prove to be an outlier or the new normal going forward remains largely unclear.
- Either way, heightened focus on more immediate threats (like COVID-19) could adversely impact progress on longer-term challenges (like climate change).

"Lower-For-Longer" Interest Rates + Stock Market Volatility

- Interest rates are historically low, which is expected to persist into the future.
- Also, stock market volatility remains elevated as the world struggles to control the pandemic.
- This combination will likely weigh on underwriters' profitability, which tends to result in more expensive insurance coverage.

Work-From-Home Economy

- Will the majority of the workforce ever return to the office? If so, when?
- Answers to these questions will have large implications for corporations and for the insurance industry.
- Increasing work-from-home participation rates longer-term could mean companies hold less property assets and have fewer employees on site, amongst others.

Source: Business Insurance, Insurance Journal, PropertyCasualty360

CONFIDENTIAL AND PROPRIETARY INFORMATION OF STEPHENS INSURANCE, LLC

Stephens Market Scorecard Fourth Quarter 2020

Umbrella / Excess

- Significant rate increases are a result of the loss activity in the underlying general liability/auto.
- Capacity is tight; some estimate capacity is down roughly ($400M) year-over-year.
- Continue to see more carriers request higher attachment points for certain industry sectors.
- "Social inflation" continues to impact settlement amounts, which are also driving rate increases.
- Expect rate increases and a potential need for increased primary limits at renewal.

General Liability

- Most industry sectors have seen flat or relatively limited rate increases over the past few years.
- Jury awards have been increasing, driving a slight uptick in claims' cost in recent quarters.
- Many carriers are exiting the GL marketplace for the Habitational, Hospitality and Retail industries.
- Social Inflation and excess pricing increases are driving the need for increased CGL limits.

CONFIDENTIAL AND PROPRIETARY INFORMATION OF STEPHENS INSURANCE, LLC

Stephens Market Scorecard Fourth Quarter 2020

Workers' Compensation

- There have been five consecutive years of profitability.
- Market capacity and profitability have led to rate decreases.
- Single-digit rate increases, if any, are expected for the near future.
- However, if unemployment continues to increase, combined ratios are likely to deteriorate and put pressure on rates in the future.

Auto

- Auto has seen rate increases for over 30 straight quarters; current average is roughly 7% - 12%.
- Claim frequency and severity are at all-time highs. Claim costs are being driven by increased medical costs, attorney involvement, distracted driving (i.e. cell phone usage), and a shortage of experienced commercial drivers.
- Seeing carriers request higher attachment points for large fleets and the Transportation industry.
- Expect rate increases and limited market appetite at renewal.

CONFIDENTIAL AND PROPRIETARY INFORMATION OF STEPHENS INSURANCE, LLC

Stephens Market Scorecard Fourth Quarter 2020

Property & Builders Risk

- Last few years have experienced record catastrophe losses on the back of various named storms, wildfires and flooding. As a result, combined ratios for the industry have been in excess of 110%.
- Construction inflation is also impacting total insured values.
- Rates have seen continuous acceleration of ~2% each month since early 2019, and markets remain interested in sustaining the higher rates achieved.
- Capacity is available, but underwriters are being very conservative.
- Renewals have seen double-digit % rate and retention increases, specifically for catastrophe coverages.

Marine

- Not yet a hard market, but has been "firming" over the last few years.
- 3%-10% increases can be expected depending on loss history and vessel use, condition, value, etc.
- Protection and indemnity insurers are under continued pressure for increased premiums due to high profile losses and shrinking capacity/ marketplace.
- Excess marine is seeing significant increases across the board with some markets pushing for 20%-25% increases (even for clients with clean loss records).

CONFIDENTIAL AND PROPRIETARY INFORMATION OF STEPHENS INSURANCE, LLC

Stephens Market Scorecard Fourth Quarter 2020

Management Liability

(D&O/ EPL/ Fiduciary)

- Private company D&O market is now firming rapidly, with a combination of rate pressure, retention increases and limit reductions all in play.
- Large rate increases are now common; conditions could worsen over near- to mid-term.
- Underwriters are restricting coverage, and pulling back all coverage in certain situations.
- Employment practices (EPL) is becoming a tougher market as well (similar to D&O).
- Claim counts and settlements amounts continue multi-year rising trends.
- Underwriters have heightened concerns surrounding bankruptcies and/or COVID-related impacts to insureds. Expect a more extensive underwriting & application process.
- Fewer carriers willing to write ESOPs, resulting in higher retentions/pricing and less available capacity.

Cyber

- Increasing claims (in both frequency and severity) – particularly with ransomware – are driving a shift in the previously soft market.
- Carriers are pushing rate increases on all renewals with higher retentions.
- Broad coverage continues to be available.
- Increased ransomware claims in 2020 have impacted carrier profitability, resulting in restricted limits and higher retentions.

CONFIDENTIAL AND PROPRIETARY INFORMATION OF STEPHENS INSURANCE, LLC

Recent Premium Trends: Across Coverage Lines

Premiums Increased Across All Coverage Lines, Led By Umbrella/Excess Liability

Premium Trends by Coverage Class – 4Q20

Percent Increase from Prior Year

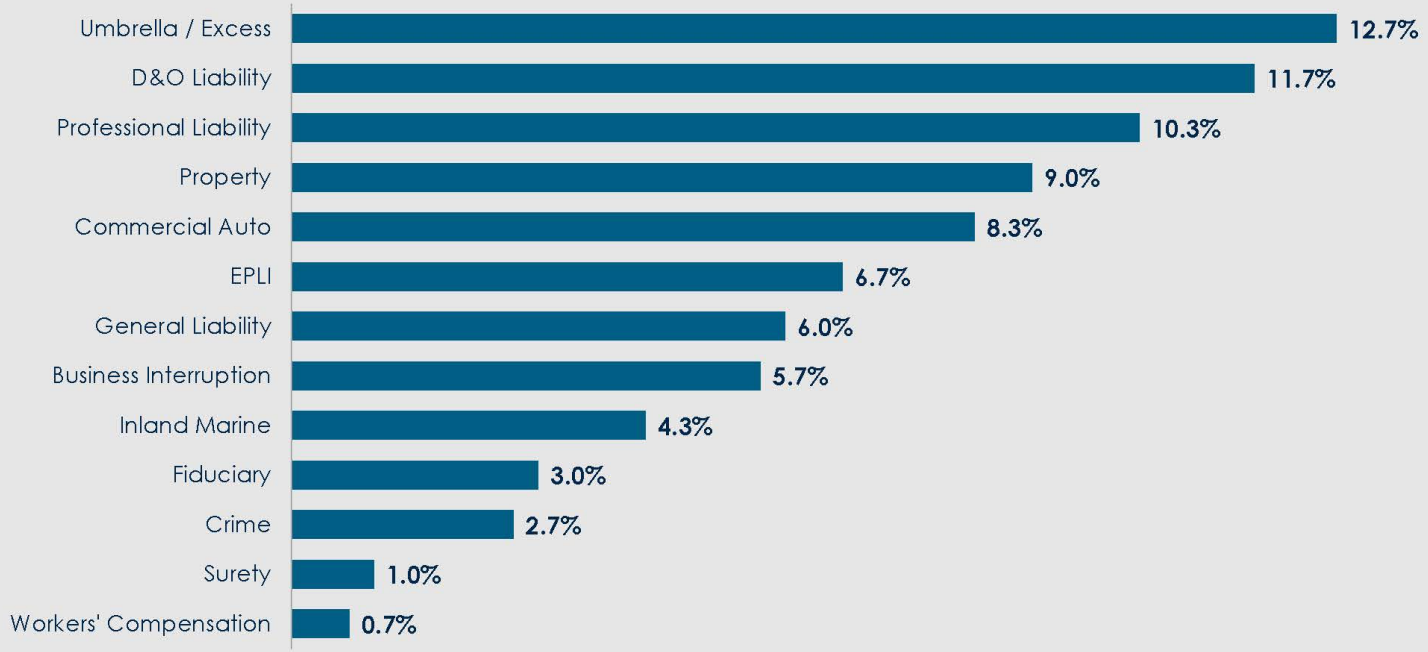

Source: Market Scout

CONFIDENTIAL AND PROPRIETARY INFORMATION OF STEPHENS INSURANCE, LLC

Quarterly Market Trends

Quarterly trends show persistent rate increases across most lines.

QUARTERLY RATE TRENDS, OVERALL AVERAGE & BY COVERAGE LINE

Percent Change from Prior Year

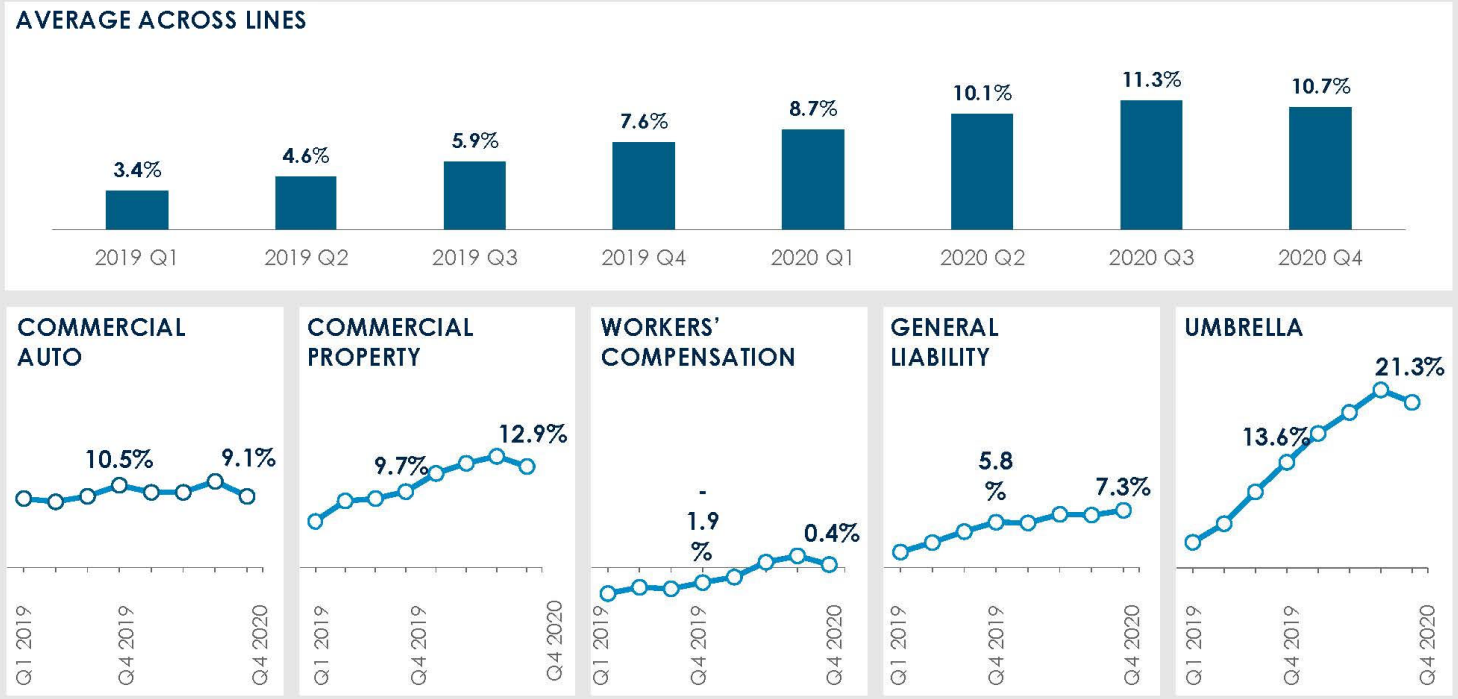

Source: Council of Insurance Agents & Brokers (CIAB)

CONFIDENTIAL AND PROPRIETARY INFORMATION OF STEPHENS INSURANCE, LLC

CITY OF BENTONVILLE
INSURANCE PROPOSAL

Comparative Premium Summary

Coverage	2020-2021 Estimated Annual Premium	2021-2022 Estimated Annual Premium	% Change	$ Change
Property Values	$229,114,996	$242,689,780	6%	$13,574,784
Property Rate	$0.12973	$0.14919	15%	$0.01946
Terrorism Rate	$0.0040123	$0.0046141	15%	$0.00060
Combined Rate	$0.1337458	$0.153807	15%	$0.02006
Total Annual Premium	**$306,432**	**$373,275**	**22%**	**$66,843**

Terrorism(TRIA) included above is annual premium of $11,267 TRIA may be rejected under this property policy
If rejected , annual estimated premium is **$362,008**

Please refer to Terrorism Program Presentation for full summary.
(next slide provides brief overview of TRIA vs Terrorism)

CONFIDENTIAL AND PROPRIETARY INFORMATION OF STEPHENS INSURANCE, LLC

TRIA vs Terrorism

	TRIA (Terrorism Risk Protection Act)	Terrorism
What it is:	The program is essentially a federal backstop for insurers that offer terrorism insurance cover in the event there is a large-scale terrorist attack. Similar programs exist in other countries, for instance Pool Re in the United Kingdom.	Private insurer option, meaning businesses can choose between a terrorism policy that is backed by government or broader private market option.
Trigger:	Must be a certified act of terror and this must be determined by the federal government. Also, must have generated $200M in losses for the program to trigger. No event since 9/11 has been declared a act of terrorism	Policy will respond to any act of terrorism committed for political, religious, ideological or similar reasons. Can be "lone-wolf style, or committed by groups. Standalone terrorism do not require the event to be certified as an act of terrorism by the government.
Coverage:	Attached most often to company's property policy, so the cover is similar to traditional property damage and business interruption. Subject to renewal through acts of Congress every 5 years, making its nature very slow to change with new developments in the market and at risk for it not to be continued.	Standalone terrorism policies, on the other hand, tend to provide broader coverage and are often quicker to evolve with the changing nature of terrorist attack. Terrorism policies have evolved to cover property damage, business interruption, but can also cover non-business interruption(restriction of access)
Pricing:	The TRIA program does not mandate that participating insurers provide a pricing matrix to be passed on and recouped from policyholders. Instead, it uses a post-event recoupment mechanism, which can cause pricing to be erratic. Pricing for TRIA-backed policies is also often linked to the underlying property premium, which means in times of a hard property market, terrorism prices will also increase even though this doesn't reflect the actual change in exposure	By comparison, standalone policies will have a pricing rationale that is consistent, competitive and in correlation with the true exposure.

Proposal Introduction

A comprehensive risk management program is key for any successful business. At Stephens Insurance, we help clients protect and grow their businesses through the identification, quantification, and development of management techniques to address the evolving risks in their business environment.

Our recommendations are based on a careful analysis of the risks unique to you and your company. To this end, we have prepared the following insurance proposal for your review.

Named Insured Schedule

City of Bentonville

117 West Central Ave

Bentonville, AR 72712

Property Location Schedule

Address
~~117 West Central Avenue, Bentonville, Arkansas, 72712, USA~~
~~115 West Central Avenue, Bentonville, Arkansas, 72712, USA~~
402 South Main Street, Bentonville, Arkansas, 72712, USA
2500, 2510 & 2570 Southwest Aviation Street, Bentonville, Arkansas, 72712, USA
540 Southeast A Street, Bentonville, Arkansas, 72712, USA
1991 Southeast 5th Street, Bentonville, Arkansas, 72712, USA
2912 Southwest 14th Street, Bentonville, Arkansas, 72712, USA
1990 NW A St, Bentonville, Arkansas, 72712, USA
910 Southeast J Street, Bentonville, Arkansas, 72712, USA
2808 Southeast 28th, Bentonville, Arkansas, 72712, USA
5300 Barron Road, Bentonville, Arkansas, 72712, USA
1207 Moberly Lane, Bentonville, Arkansas, 72712, USA
5408 SW Morning Star Rd, Bentonville, Arkansas, 72712, USA
100 Southeast 10th Street, Bentonville, Arkansas, 72712, USA
800 Southwest A Street, Bentonville, Arkansas, 72712, USA
1610 Moberly Lane, Bentonville, Arkansas, 72712, USA
907 Northwest 13th Street, Bentonville, Arkansas, 72712, USA
900 Northeast McCollum Drive, Bentonville, Arkansas, 72712, USA
800 Southwest Elm Tree Road, Bentonville, Arkansas, 72712, USA
405 S Main St, Bentonville, Arkansas, 72712, USA
206 East Central Avenue, Bentonville, Arkansas, 72712, USA
401 Southeast 2nd Street, Bentonville, Arkansas, 72712, USA
Southwest 5th & F Street, Bentonville, Arkansas, 72712, USA

Address
401 NE Martin Luther King Pkwy, Bentonville, Arkansas, 72712, USA
401 NE Moberly Lane, Bentonville, Arkansas, 72712, USA
1900 Block of SW I, Bentonville, Arkansas, 72712, USA
Hwy 71 B North, Bentonville, Arkansas, 72712, USA
1200 Northeast Waverly Way, Bentonville, Arkansas, 72712, USA
215 Southwest A Street, Bentonville, Arkansas, 72712, USA
300 Northwest 10th Street, Bentonville, Arkansas, 72712, USA
3108 Southeast J Street, Bentonville, Arkansas, 72712, USA
2400 North Walton Boulevard, Bentonville, Arkansas, 72712, USA
NE J St & John Deshields Blvd, Bentonville, Arkansas, 72712, USA
503 Southwest D Street, Bentonville, Arkansas, 72712, USA
3800 South Bright Road, Bentonville, Arkansas, 72712, USA
400 Block S Main, Bentonville, Arkansas, 72712, USA
SE 8th on Burham Place, Bentonville, Arkansas, 72712, USA
312 North Main Street, Bentonville, Arkansas, 72712, USA
305 Southwest A Street, Bentonville, Arkansas, 72712, USA
Derek Drive, Bentonville, Arkansas, 72712, USA
908 Southeast 14th Street, Bentonville, Arkansas, 72712, USA
2000 Northwest A Street, Bentonville, Arkansas, 72712, USA
1992 Northwest A Street, Bentonville, Arkansas, 72712, USA
3690 Peach Orchard Rd, Bentonville, Arkansas, 72712, USA
2311 NE A Street, Bentonville, Arkansas, 72712, USA
3608 Rivieria Drive, Bentonville, Arkansas, 72712, USA

Amended: Removed Location 1 & 2

Property Location Schedule

Address
1901 Northeast A Street, Bentonville, Arkansas, 72712, USA
Olive & Moberly, Bentonville, Arkansas, 72712, USA
1900 Highway 102 East, Bentonville, Arkansas, 72712, USA
700 Southwest I Street, Bentonville, Arkansas, 72712, USA
901 Northwest 12th Street, Bentonville, Arkansas, 72712, USA
2706 South Walton Boulevard, Bentonville, Arkansas, 72712, USA
214 Northeast A Street, Bentonville, Arkansas, 72712, USA
801 Southwest A Street, Bentonville, Arkansas, 72712, USA
201 Northwest Elm Tree Road, Bentonville, Arkansas, 72712, USA
3312 Southwest I Street, Bentonville, Arkansas, 72712, USA
1100 & 1101 Southwest Citizens Circle, Bentonville, Arkansas, 72713, USA
1309 Southwest Hayfield, Bentonville, Arkansas, 72712, USA
SE D & 6th Street, Bentonville, Arkansas, 72712, USA
299 Northwest A Street, Bentonville, Arkansas, 72712, USA
3200 SW Municipal Drive, Bentonville, Arkansas, 72712, USA
1701 NE John DeShields Boulevard, Bentonville, Arkansas, 72712, USA
3202 Southwest Municipal Drive, Bentonville, Arkansas, 72712, USA
2900 Souwthwest Municpal Drive, Bentonville, Arkansas, 72712, USA
3424 Razorback Greenway, Bentonville, Arkansas, 72712, USA
1138 Citizens Park Circle, Bentonville, Arkansas, 72712, USA
501 SW 28th Street, Bentonville, Arkansas, 72712, USA
1501 Derek Drive, Bentonville, Arkansas, 72712, USA

Address
4508 Southwest Prime Avenue, Bentonville, Arkansas, 72713, USA
201 Northwest A Street, Bentonville, Arkansas, 72712, USA
1000 SW 14th St, Bentonville, Arkansas, 72712, USA
2401 SW Aviation St, Bentonville, Arkansas, 72712, USA

INSURANCE PROPOSAL FOR City of Bentonville

A. POLICY TERM

FROM: 8 July 2021 12:01 a.m. Standard Time
TO: 8 July 2022 12:01 a.m. Standard Time

B. NAMED INSURED

City of Bentonville, and its wholly or majority owned subsidiaries and any interest which may now exist or hereinafter be created or acquired which are owned, controlled or operated by any one or more of those named insureds.

C. POLICY LIMIT

This Company's total limit of liability, including any insured Business Interruption loss, will not exceed the Policy Limit of USD 242,689,780 as a result of any one **occurrence** subject to the respective sub-limits of liability shown elsewhere in this Policy.

D. POLICY TERRITORY

Coverage provided by this Policy is limited to property while located within the United States of America.

Cyber Coverage Territory

Coverage provided in Data Restoration; Data Service Provider Property Damage and Business Interruption and Owned Network Interruption is limited to anywhere in the world except Cuba, Iran, North Korea, Sudan, Syria or Crimea Region of Ukraine.

E. INSURANCE PROVIDED

Location Schedule

This Policy covers property, as described in this Policy, against ALL RISKS OF PHYSICAL LOSS OR DAMAGE, except as hereinafter excluded, while located as follows:
See attached Schedule of Locations

F. SUB-LIMITS

Unless otherwise stated below or elsewhere in this Policy, the following sub-limits of liability, including any insured Business Interruption loss, will be the maximum payable and will apply on a per **occurrence** basis.

The sub-limits stated below or elsewhere in this Policy are part of and not in addition to the Policy Limit.

When a limit of liability applies to a **location** or property, such limit of liability will be the maximum amount payable for all loss or damage.

There shall be no liability under this Policy when "NOT COVERED" is shown as a sublimit.

Accounts Receivable	USD 500,000
Arson or Theft Reward	USD 100,000
Attraction Property	USD 100,000
Boiler and Machinery	Policy Limit
Brand Protection	Policy Limit
Change of Temperature	USD 100,000
Civil or Military Authority	30 days

Property

Communicable Disease - Property Damage and Communicable Disease - Business Interruption combined	USD 1,000 **annual aggregate**, not to exceed 12 months
Contractual Penalties	USD 100,000
Crisis Management	USD 100,000, not to exceed 30 days
Cyber Event	1. USD 1,000 **annual aggregate** for Data Restoration and Owned Network Interruption combined 2. USD 1,000 **annual aggregate** for Data Service Provider - Property Damage and Data Service Provider - Business Interruption combined 3. USD 50,000 **annual aggregate** for loss or damage to **stock in process** or finished goods manufactured by or for the Insured caused by or resulting from **cyber event** that impacts the processing, manufacturing, or testing of such property or while it is otherwise being worked on.
Data Restoration	USD 500,000 **annual aggregate**
Data Service Provider - Property Damage and Data Service Provider - Business Interruption combined	USD 50,000 **annual aggregate**
Debris Removal	Policy Limit
Decontamination Costs	Policy Limit

Property

Deferred Payment	USD 100,000
Demolition and Increased Cost of Construction	Policy Limit
Earth Movement	USD 50,000,000 **annual aggregate**, not to exceed USD 50,000 **annual aggregate** for Data Service Provider - Business Interruption, Data Service Provider - Property Damage, Errors and Omissions, Off-Premises Service Interruption - Business Interruption, Off-Premises Service Interruption - Property Damage, Supply Chain and Unnamed Property, combined
Errors and Omissions	USD 1,000,000
Expediting Expenses	USD 250,000
Extended Period of Liability	90 days
Extra Expense	USD 1,000,000, except USD 250,000 for the following locations, combined: Location No. 005, 540 Southeast A Street, Bentonville, Arkansas, 72712, USA; Location No. 006, 1991 Southeast 5th Street, Bentonville, Arkansas, 72712, USA; Location No. 007, 2912 Southwest 14th Street, Bentonville, Arkansas, 72712, USA; Location No. 008, 1990 NW A St, Bentonville, Arkansas, 72712, USA; Location No. 009, 910 Southeast J Street, Bentonville, Arkansas, 72712, USA; Location No. 010, 2808 Southeast 28th, Bentonville, Arkansas, 72712, USA; Location No. 011, 5300 Barron Road, Bentonville, Arkansas, 72712, USA; Location No. 012, 1207 Moberly Lane, Bentonville, Arkansas, 72712, USA; Location No. 013, 5408 SW Morning Star Rd, Bentonville, Arkansas, 72712, USA and Location No. 014, 100 Southeast 10th Street, Bentonville, Arkansas, 72712, USA
Fine Arts	USD 250,000, not to exceed USD 10,000 per item for **irreplaceable fine arts**
Flood	USD 50,000,000 **annual aggregate**, not to exceed USD 50,000 **annual aggregate** for Data Service Provider - Business Interruption, Data Service Provider - Property Damage, Errors and Omissions, Off-Premises Service Interruption - Business Interruption, Off-Premises Service Interruption - Property Damage, Supply Chain and Unnamed Property, combined

Property

Green Coverage	USD 50,000 not to exceed 25% of the amount of the property damage loss
Gross Earnings	NOT COVERED
Gross Profits	NOT COVERED
Ingress/Egress	USD 100,000
Land and Water Clean Up Expense	USD 50,000 **annual aggregate**
Leasehold Interest	USD 250,000
Locks and Keys	USD 100,000
Logistics Extra Cost	USD 100,000
Money and Securities	USD 100,000
Newly Acquired Property	USD 2,500,000
Off-Premises Service Interruption - Property Damage and Off-Premises Service Interruption - Business Interruption combined	USD 250,000
Owned Network Interruption	Included in **cyber event** limit
Professional Fees	USD 100,000
Property Removed from a Location	Policy Limit
Protection and Preservation of Property - Business Interruption	Policy Limit
Protection and Preservation of Property - Property Damage	Policy Limit, not to exceed USD 250,000 for security costs

Property

Rental Income	NOT COVERED
Research and Development	USD 100,000
Soft Costs	USD 100,000
street lights and signs, traffic lights and signs, stadium lights	USD 200,000
Supply Chain	USD 100,000
Tax Treatment	USD 100,000
Tenants Legal Liability	USD 100,000
Terrorism	USD 100,000 **annual aggregate**, not to exceed USD 100,000 **annual aggregate** for Flood, Property Removed from a Location and Unnamed Property, combined
Terrorism: Supplemental United States Certified Act of Terrorism Endorsement(s)	USD 100,000 for property located in United States of America
Transit	USD 250,000, not to exceed USD 250,000 for Business Interruption
Unnamed Property	USD 1,000,000
Valuable Papers and Records	USD 500,000, not to exceed USD 10,000 per item for **irreplaceable valuable papers and records**

G. QUALIFYING PERIODS AND DEDUCTIBLES

QUALIFYING PERIODS

This Company will not be liable for loss or damage unless the Qualifying Period below is exceeded. When the Qualifying Period is exceeded, the loss will be calculated beginning from the time of loss or damage. The Qualifying Periods for the following coverages are as follows:

Communicable Disease - Property Damage and Communicable Disease - Business Interruption	48 hours
Data Restoration	48 hours
Data Service Provider - Property Damage and Data Service Provider - Business Interruption	24 hours
Off-Premises Service Interruption - Property Damage and Off-Premises Service Interruption - Business Interruption	24 hours
Owned Network Interruption	48 hours

Property

DEDUCTIBLES

This Company will not be liable for loss or damage, including any insured Business Interruption loss, in any one **occurrence** until the amount of loss or damage exceeds the deductible amount shown below and then this Company will only be liable for its share of the loss or damage in excess of the deductible amount.

The following deductible amounts shall apply per **occurrence**, unless otherwise stated, for insured loss or damage under this Policy.

When two or more deductibles apply to a single **occurrence**, then no more than the largest deductible amount will apply. However, this Policy allows for the application of separate and distinct deductibles and deductibles for specific loss or damage as shown below.

When a day equivalent deductible is stated below it is calculated as follows. The 100% daily actual annual Business Interruption value that would have been earned had no loss occurred at the **location** where the physical damage happened plus that proportion of the 100% annual business interruption value at all other **locations** where Business Interruption loss ensues, divided by the number of annual working days.

When a % percent deductible is stated below it is calculated as follows:

1. The value of property at the time such loss or damage at the **location** where loss or damage occurs, in accordance with the valuation section of this Policy.

2. The annual Business Interruption value that would have been earned at the **location** where loss or damage occurs plus that proportion of the 100% Business Interruption value at all other **locations** where Business Interruption loss ensues, in accordance with the Business Interruption section of this Policy (if any).

Boiler and Machinery	Property Damage: USD 10,000, except USD 2 per KVA (maximum name plate rating) subject to a minimum of USD 10,000 per transformer Business Interruption: 1 day equivalent
Earthquake	USD 100,000 per **location**

Flood	USD 100,000 per **location**, except USD 500,000 per **location** for the following locations: Location No. 024, 401 Southeast 2nd Street, Bentonville, Arkansas, 72712, USA; Location No. 034, 2400 North Walton Boulevard, Bentonville, Arkansas, 72712, USA and Location No. 051, 1901 Northeast A Street, Bentonville, Arkansas, 72712, USA
Water Damage (including sprinkler leakage)	USD 50,000
Wind and Hail	USD 50,000 per **location**
All Other Losses	USD 25,000

G. SPECIAL TERMS AND CONDITIONS

1. United States Certified Act of Terrorism - PRO 207 (01/20)

As respects the United States, its territories and possessions and the Commonwealth of Puerto Rico, the definition of **terrorism** is declared null and void and it is agreed that a **Certified Act of Terrorism** under the terms of the SUPPLEMENTAL UNITED STATES CERTIFIED ACT OF TERRORISM ENDORSEMENT attached to this Policy shall be considered **terrorism** within the terms of this Policy. Notwithstanding anything contained in this Policy to the contrary, this Policy provides coverage for direct physical loss or damage to insured property and any resulting BUSINESS INTERRUPTION loss, as provided in the Policy, caused by or resulting from a **Certified Act of Terrorism** only to the extent coverage is provided under the terms and conditions of the SUPPLEMENTAL UNITED STATES CERTIFIED ACT OF TERRORISM ENDORSEMENT attached to this Policy. Any difference in limit between loss recoverable under the SUPPLEMENTAL UNITED STATES CERTIFIED ACT OF TERRORISM ENDORSEMENT and this Policy is not recoverable under this Policy.

Statement of Values

To view the Statement of Values in Excel format, please click the icon below. The Statement of Values is also inserted across the next three slides.

Microsoft Excel Worksheet

CONFIDENTIAL AND PROPRIETARY INFORMATION OF STEPHENS INSURANCE, LLC

Statement of Values *(continued)*

Location	Building	Department	Entity Name	Address	Building	Contents	Extra Expense	Location Total	Sq. Footage	Cost per Ft²	Building Valuation	Cost per Ft²
4	1	ADMIN	Drive Thru/Training	402 S MAIN	$ 1,300,000	$ 250,000		$ 1,550,000	5,400	$241	$ 811,541	$150
5	1	AIRPORT	Masonry Hangar	2510 SW Aviation St.	$ 1,186,560	$ 206,000		$ 1,392,560	5,760	$206	$ 635,573	$110
5	3	AIRPORT	Terminal Bldg	2500 SW Aviation St.	$ 515,000	$ 103,000		$ 618,000	2,500	$206	$ 516,274	$207
5	4	AIRPORT	Electrical Building	2570 SW Aviation St.	$ 120,000	$ 65,000		$ 185,000	270	$444	$ 87,122	$323
6	1	ELECTRIC	Elec Sub A	540 SE A St	$ 6,975,000			$ 6,975,000	21,025		$ 6,975,000	
7	1	ELECTRIC	Elec Sub B	1991 SE 5th Street	$ 6,975,000			$ 6,975,000	58,960		$ 6,975,000	
8	1	ELECTRIC	Elec Sub C	2912 SW 14th St	$ 6,975,000			$ 6,975,000	28,210		$ 6,975,000	
9	1	ELECTRIC	Elec Sub D	1990 NW A St	$ 6,975,000			$ 6,975,000	29,485		$ 6,975,000	
10	1	ELECTRIC	Elec Sub E	910 SE J St	$ 6,975,000			$ 6,975,000	51,385		$ 6,975,000	
11	1	ELECTRIC	Elec Sub F	2808 SE F St	$ 6,975,000			$ 6,975,000	52,360		$ 6,975,000	
12	1	ELECTRIC	Elec Sub G	5300 Barron Rd	$ 6,975,000			$ 6,975,000	51,975		$ 6,975,000	
13	1	ELECTRIC	Elec Sub H	1207 SE Moberley	$ 6,975,000			$ 6,975,000	48,090		$ 6,975,000	
14	1	ELECTRIC	Elec Sub I	5408 SW Morning Star Rd	$ 6,975,000			$ 6,975,000	52,030		$ 6,975,000	
15	1	ELECTRIC	Elec Switching Station	100 SE 10th St	$ 1,300,000			$ 1,300,000	10,019		$ 1,300,000	
17	1	FIRE	New Fire Station 1	800 SW A St	$ 7,750,000	$ 1,030,000		$ 8,780,000	31,000	$250	$ 7,709,726	$249
18	1	FIRE	Fire Station 2	1610 SE Moberly Ln	$ 1,000,000	$ 515,000		$ 1,515,000	4,000	$250	$ 867,732	$217
19	1	FIRE	Fire Station 3	907 NW 13th St	$ 1,008,000	$ 515,000		$ 1,523,000	4,032	$250	$ 958,507	$238
20	1	FIRE	Fire Station 4	900 McCollum Rd	$ 1,320,750	$ 515,000		$ 1,835,750	5,283	$250	$ 1,297,565	$246
21	1	FIRE	Fire Station 5	800 SW Elm Tree Rd	$ 2,039,000	$ 515,000		$ 2,554,000	8,156	$250	$ 1,860,548	$228
76	1	FIRE	Fire Station 6	3312 SW "I" Street	$ 2,368,000	$ 515,000		$ 2,883,000	9,472	$250	$ 2,334,610	$246
75	1	FIRE	Fire Station 7	4508 SW Prime Avenue	$ 2,750,000	$ 515,000		$ 3,265,000	11,000	$250	$ 2,678,742	$244
74	3	Fire Dept	National Guard buildings (traded for land) - stor	801 SW A St	$ 360,000			$ 360,000	1,800	$200	$ 308,323	$171
23	1	LIBRARY	Bentonville Library	405 S Main St	$ 7,828,000	$ 4,644,236		$ 12,472,236	38,000	$206	$ 7,317,353	$193
24	1	PARKS REC	Dave Peel Park - Pavilion, Restroom and Playgr	206 E Central Ave	$ 185,400			$ 185,400			$ 185,400	
25	1	PARKS REC	Town Branch Park - Pavilion	401 SE 2nd	$ 61,800			$ 61,800			$ 61,800	
25	2	PARKS REC	Flammable Liquids Storage Bldg	401 E Moberly Ln	$ 29,664			$ 29,664	144		$ 29,664	
26	1	PARKS REC	Mausoleum	SW 5th & F St	$ 336,810			$ 336,810	1,636		$ 336,810	
27	1	PARKS REC	Melvin Ford Aquatic Center	401 NE Martin Luther King Pkwy	$ 1,196,860	$ 515,000		$ 1,711,860	5,810		$ 1,196,860	
27	2	PARKS REC	Mem Park Fields and Courts (tennis & volleyball)	401 NE Martin Luther King Pkwy	$ 1,400,800			$ 1,400,800			$ 1,400,800	
27	3	PARKS REC	MEMPARK SCOREBOARDS	401 NE Martin Luther King Pkwy	$ 103,000			$ 103,000			$ 103,000	
28	1	PARKS REC	Mem Park Maint Bldg	401 E Moberly Ln	$ 1,156,072	$ 515,000		$ 1,671,072	5,612		$ 1,156,072	
28	2	PARKS REC	MEMPARK CHEMICAL STORAGE	401 E Moberly Ln	$ 30,900			$ 30,900			$ 30,900	
28	3	PARKS REC	MEMPARK GREEN HOUSE	401 E Moberly Ln	$ 70,040			$ 70,040			$ 70,040	
28	4	PARKS REC	MEMPARK PLAYGROUND	401 E Moberly Ln	$ 103,000			$ 103,000			$ 103,000	
28	5	PARKS REC	MEMPARK SKATE PARK	401 E Moberly Ln	$ 103,000			$ 103,000			$ 103,000	
28	6	PARKS REC	Mem Park TENNIS COMPLEX AND RESTRM	1701 NE John DeShields Blvd	$ 1,545,000			$ 1,545,000			$ 1,545,000	
29	1	PARKS REC	Memorial Park - Volley Ball Court	1701 NE John DeShields Blvd	$ 41,200			$ 41,200			$ 41,200	

Statement of Values *(continued)*

Location	Building	Department	Entity Name	Address	Building	Contents	Extra Expense	Location Total	Sq. Footage	Cost per Ft²	Building Valuation	Cost per Ft²
30	1	PARKS REC	Lake Bentonville Pavilion	1900 Block of SW I	$ 30,900			$ 30,900			$ 30,900	
30	2	PARKS REC	Lake Bentonville Playground	1900 Block of SW I	$ 30,900			$ 30,900			$ 30,900	
31	1	PARKS REC	Bella Vista Lake Pk Pavilion	Hwy 71 B North	$ 30,900			$ 30,900			$ 30,900	
31	2	PARKS REC	Bella Vista Lake Pk Playground	Hwy 71 B North	$ 82,400			$ 82,400			$ 82,400	
32	1	PARKS REC	Kingsbury/Enfield Park	1200 NE Waverly	$ 82,400			$ 82,400			$ 82,400	
33	1	PARKS REC	Downtown Activity Center	215 SW A	$ 1,648,000	$ 309,000		$ 1,957,000			$ 1,648,000	
33	2	PARKS REC	Storage Building at the DAC	215 SW A	$ 25,000	$ 25,000		$ 50,000			$ 25,000	
34	1	PARKS REC	Mem Parks Restrooms Storage	401 E Moberly Ln	$ 224,128			$ 224,128	1,088		$ 224,128	
34	2	PARKS REC	Memorial Park Pavillion	401 E Moberly Ln	$ 420,240			$ 420,240	2,040		$ 420,240	
34	3	PARKS REC	Mem Park Storage/Restrooms	401 E Moberly Ln	$ 289,224			$ 289,224	1,404		$ 289,224	
35	1	PARKS REC	Spring Park Restrooms	300 NW 10th St	$ 45,320			$ 45,320	220		$ 45,320	
35	2	PARKS REC	Spring Park Pavilion	300 NW 10th St	$ 316,416			$ 316,416	1,536		$ 316,416	
36	1	PARKS REC	Phillips Park Concession/Restrooms	3108 SE J St	$ 244,110			$ 244,110	1,188		$ 244,110	
37	1	PARKS REC	Phillips Park Pavilion	3108 SE J St	$ 306,000			$ 306,000	1,000		$ 306,000	
37	2	PARKS REC	Phillips Parks Fields	3108 SE J St	$ 257,500			$ 257,500			$ 257,500	
38	1	PARKS REC	New Sports Complex	401 E Moberly Ln	$ 566,500	$ 103,000		$ 669,500	4,312		$ 566,500	
40	1	PARKS REC	Fencing at Moberly Lane Shop Area	401 E Moberly Ln	$ 48,410			$ 48,410			$ 48,410	
41	1	PARKS REC	Bark Park (restroom)	2400 N Walton	$ 118,450			$ 118,450	1,400		$ 118,450	
41	1	PARKS REC	Bark Park North Trail Restroom	2400 N Walton	$ 123,600			$ 123,600			$ 123,600	
42	1	PARKS REC	Brightwood Pavilion Tennis	2400 N Walton	$ 206,000			$ 206,000			$ 206,000	
43	1	PARKS REC	Orchards Park Restrooms	NE J St & John Deshields Blvd	$ 133,900			$ 133,900			$ 133,900	
43	2	PARKS REC	Orchard Park Pavilion	NE J St & John Deshields Blvd	$ 103,000			$ 103,000			$ 103,000	
44	1	PARKS REC	Gilmore Park	503 SW "D" Street	$ 206,000			$ 206,000			$ 206,000	
45	1	PARKS REC	WILDWOOD PARK - PAVILION	3800 Bright road	$ 103,000			$ 103,000			$ 103,000	
45	2	PARKS REC	WILDWOOD PARK - TENNIS COMPLEX	3800 Bright road	$ 257,500			$ 257,500			$ 257,500	
46	1	PARKS REC	TRAIN STATION PARK	400 BLOCK S MAIN	$ 51,500			$ 51,500			$ 51,500	
47	1	PARKS REC	DURHAM PARK PLAYGROUND	SE 8TH ON DURHAM PL	$ 82,400			$ 82,400			$ 82,400	
48	1	PARKS REC	CRYSTAL BRIDGE TRAIL NE A STREET PARKING LOT -	312 N. Main St	$ 71,070			$ 71,070			$ 71,070	
48a		Parks Rec	Austin Baggett Park Pavilion	SE D and 6th	$ 51,500			$ 51,500			$ 51,500	
48b		Parks Rec	Austin Baggett Park Playground	SE D and 6th	$ 103,000			$ 103,000			$ 103,000	
48C		Parks Rec	Citizens Park Restrm/Concession	1309 SW Hayfield	$ 314,000			$ 314,000	1,500		$ 314,000	
73	1	PARKS REC	Lawrence Place Ice Skating Park	214 NE A St	$ 1,545,000	$ 51,500		$ 1,596,500	1,000		$ 1,545,000	
75	1	PARKS REC	Merchants Park Restroom/Concession	201 NW Elm Tree Rd	$ 187,460			$ 187,460	1,500		$ 187,460	
76	1	PARKS REC	Bentonville Community Center	1101 SW Citizens Circle	$ 16,340,913	$ 1,640,044		$ 17,980,957	82,700	$198	$ 16,414,496	$198
new		PARKS REC	Wildwood Park Playground	3800 Bright Road	$ 75,000			$ 75,000			$ 75,000	
new		PARKS REC	Bicycle Playground	2400 N Walton	$ 75,000			$ 75,000			$ 75,000	
new		PARKS REC	North Trail Fitness Center	North Bentonville Trail	$ 75,000			$ 75,000			$ 75,000	

Statement of Values *(continued)*

Location	Building	Department	Entity Name	Address	Building	Contents	Extra Expense	Location Total	Sq. Footage	Cost per Ft²	Building Valuation	Cost per Ft²
		PARKS REC	Citizens Park Pavilion/Amphitheater	1138 Citizens Park Circle	$ 254,414			$ 254,414			$ 254,414	
		PARKS REC	Slaughter Pen Restroom	3424 Razorback Greenway	$ 60,000			$ 60,000			$ 60,000	
		PARKS REC	N Bentonville Trail Fitness Station	Razorback Greenway	$ -			$ -			$ -	
		PARKS REC	Wildwood Park Playground	3800 Bright Road	$ 67,000			$ 67,000			$ 67,000	
		PARKS REC	Memorial Park Ballfields	401 N Moberly	$ 2,500,000	$ 515,000		$ 3,015,000			$ 2,500,000	
49	1	COM DEV	Community Development Bldg	305 SW A St	$ 2,369,000	$ 1,030,000		$ 3,399,000	11,500	$206	$ 2,308,877	$201
51	1	POLICE	Police Annex	Dereck St	$ 1,236,000	$ 515,000		$ 1,751,000	6,000		$ 1,236,000	
50	1	POLICE	Police Facility	908 SE 14th St	$ 3,746,110	$ 2,060,000		$ 5,806,110	20,685	$181	$ 3,624,150	$175
74	1	Police	Special Services Building	801 SW A St	$ 875,500	$ 50,000		$ 925,500	8,000		$ 875,500	
55	1	STREET	Sand Storage Bldg - Compost Facility	2000 NW A St	$ 103,000	$ 51,500		$ 154,500	2,400		$ 103,000	
		STREET	Metal building 1	1992 NW A	$ 124,589	$ 77,250		$ 201,839	2,240		$ 124,589	
		STREET	metal building 2	1992 NW A	$ 26,698	$ 51,500		$ 78,198	480		$ 26,698	
		STREET	metal building 3	1992 NW A	$ 20,538	$ 25,750		$ 46,288	360		$ 20,538	
56	1	WW	2006 Ultra Violet Equipment	1901 NE A St	$ 324,450	$ 100,000		$ 424,450	2,500		$ 324,450	
57	1	WW	Wastewater Compost Facility	2000 NW A St	$ 378,525	$ 515,000		$ 893,525	7,414		$ 378,525	
58	1	WW	Wastewater Mckissick Creek Complex	3690 Peach Orchard Rd	$ 1,946,700	$ 150,000		$ 2,096,700	2,970		$ 1,946,700	
59	1	WW	Wastewater North Lift Station	2311 NE A St	$ 432,600	$ 50,000		$ 482,600	688		$ 432,600	
60	1	WW	Wastewater South Lift Station	3608 SE Rivera Rd	$ 432,600	$ 50,000		$ 482,600	725		$ 432,600	
62	1	WW	Wastewater Treatment Facility	1901 NE A St	$ 25,600,000	$ 5,150,000		$ 30,750,000	140,000		$ 25,600,000	
64	1	WATER	Water Dept Metering Station	Olive & Moberly	$ 103,000			$ 103,000	500		$ 103,000	
65	1	WATER	Water Dept Service TV Camera	N/A	$ 70,298			$ 70,298	1		$ 70,298	
66	1	WATER	Water Pump Station and Equip	700 SW I St	$ 816,533			$ 816,533	1		$ 816,533	
67	1	WATER	Water Tank No 1	201 NW A St	$ 1,460,025			$ 1,460,025	1		$ 1,460,025	
68	1	WATER	Water Tank No 2	1900 Hwy 102 East	$ 1,946,700			$ 1,946,700	1		$ 1,946,700	
69	1	WATER	Water Tank No 3	700 SW I St	$ 1,287,500			$ 1,287,500	1		$ 1,287,500	
70	1	WATER	Water Tank No 4	700 SW I St	$ 1,622,250			$ 1,622,250	1		$ 1,622,250	
71	1	WATER	Water Tank No 5	901 NW 12th St	$ 2,781,000			$ 2,781,000			$ 2,781,000	
72	1	COURT	District Court Bldg	2706 Walton Blvd	$ 1,854,000	$ 500,000		$ 2,354,000	10,400	$178	$ 1,828,551	$176
73	1	Public Works	Municipal Works Building - Admin Offices	3200 SW Municipal Drive	$ 8,400,000	$ 500,000		$ 8,900,000	42,000	$200	$ 7,744,022	$184
74	1	Public Works	Municipal Works Building - Auction House	3202 SW Municipal Drive	$ 430,000	$ 100,000		$ 530,000	4,000	$108	$ 435,002	$109
75	1	Public Works	Municipal Works Building - Inventory Warehouse	501 SW 28th Street	$ 2,000,000	$ 4,000,000		$ 6,000,000	16,000	$125	$ 1,881,086	$118
76	1	Public Works	Municipal Works Building - Truck Bays	3200 SW Municipal Drive	$ 6,355,000	$ 100,000		$ 6,455,000	60,000	$106	$ 5,708,414	$95
77		Public Works	Municipal Works Building - Fueling/Wash Bays	2900 SW Municipal Drive	$ 730,000			$ 730,000			$ 730,000	
78	1	Public Works	Municipal Works Building - Sand/Salt Storage		$ 85,000	$ 50,000		$ 135,000			$ 85,000	
79	1	PARKS REC	Citizens Park - Tennis Complex	1100 SW Citizens Circle	$ 1,300,000			$ 1,300,000			$ 1,300,000	
80	1	PD Dept	Emergency Communications Center	1501 Derek Street	$ 9,560,000	$ 250,000		$ 9,810,000	22,705	$421	$ 8,258,091	$364
81	1	ADMIN	Admin Building, HR, Accounting, IT, Utility Buildin	1000 SW 14th Street	$ 3,200,000	$ 1,000,000		$ 4,200,000	24,000	$133	$ 3,050,567	$127
82	1	PW Maint	Public Works Maintenance Building	2401 SW Aviation Street	$ 2,797,473	$ 100,000		$ 2,897,473	12,789	$219	$ 2,589,096	$202
				TOTALS	$212,152,000	$ 29,537,780	$ 1,000,000	$242,689,780		$222 Average	$206,780,162	$199 Average

Proposal Disclaimers

This insurance document is furnished to you as a matter of information for your convenience.

- It only summarizes the listed proposed policy(ies) and is not intended to reflect all terms and conditions or exclusions of each proposed policy(ies). Further, the information contained in this document reflects proposed coverage as of the effective date(s) of the proposed policy(ies) and does not include subsequent changes.
- This document is not an insurance policy and does not amend, alter or extend the coverage afforded by the listed policy(ies). The insurance afforded by the proposed policy(ies) is subject to all terms, exclusions and conditions of the proposed policy(ies).
- All coverages, coverage forms, rates, rating procedures, rating plans, deductibles and other provisions will apply in conformance with those used by the various Insurance companies and authorized by the applicable state regulatory authorities. Any provision which conflicts with State Regulations will be amended as required so as to conform.

The information provided in this document is proprietary and confidential information of Stephens Insurance, LLC. The confidential information is conveyed for the limited purpose of evaluating insurance coverage. The information should not be shared with any person not having the need to know such information, nor should it be shared with any person outside your organization without specific written approval of Stephens Insurance, LLC. Any use of this information outside of its intended scope is a violation of Stephens Insurance, LLC's legal rights and such rights will be strictly enforced.

Compensation Disclosure Notice

We, or our affiliated broker dealer Stephens Inc., may receive compensation from the insurance companies whose products we offer. In most cases such compensation is in the form of commissions which consist of a percentage of the premium paid by the insured.

In addition, we may receive incentive compensation, including contingent commissions and non-cash awards. Incentive compensation is based upon a variety of factors which may include the amount of premiums written, the retention and growth of premiums, overall profitability, and other performance measures.

Surplus Lines

For any proposed policies which are noted as surplus lines, the proposed policy is with an insurer not licensed to transact insurance in your home state and is issued and delivered as surplus line coverage under the state insurance statutes.

The Department of Insurance does not audit the finances or review the solvency of the surplus lines insurer providing this coverage.

Initial Here

Privacy Statement

At Stephens Insurance, LLC, protecting your privacy and the personal information we use to provide you with superior products and services is important to us. Our policy is to protect the confidentiality of all personal information we obtain in the course of doing business with you.

Our pledge to protect your privacy is reflected in this privacy statement, which outlines our principles in collecting, using and safeguarding your personal information.

Personal Information Stephens Insurance Collects

Stephens Insurance, LLC only collects personal information about you when it is necessary to conduct the business of insurance. We limit the collection of personal information to what is needed to affect your insurance coverage and administer your account with us.

The personal information we collect may include:

- Information you share with us either directly or through an agent (such as the information on your application, including health and financial information, or other forms you may complete for us);
- Information you provide or which is obtained through processing your application or handling a claim (such as information from a consumer reporting agency or health provider); and
- Information from your transactions with us (such as the number of years you have been a policy-holder or the types of coverage you purchase).

How We Use Personal Information

We use your personal information to affect your insurance coverage, administer, service and manage your claims and accounts, ensure proper billing, and offer you other products and services we believe may suit your needs.

Sharing Information within Stephens Insurance, LLC

In compliance with federal and state laws, we may share personal information we collect about our customers and former customers, as described above, with our affiliates, such as Stephens Inc., to better serve you or to assist you in meeting all of your current financial and investment needs. We may share information with our affiliates, for example, to:

- Provide you customer service or maintain your account; or
- Tell you about products or services offered by our affiliates which you may find useful.

Sharing Information in Other Circumstances

In compliance with federal and state laws, we may share some or all of the information we collect about our customers and former customers, as described above, to nonaffiliated companies that perform services or functions, including marketing services, for Stephens Insurance, LLC (such as vendors we hire to respond to customer requests or provide you with information about our products or services).

At Stephens Insurance, LLC, we do not sell our customer information and we do not provide customer information to persons or organizations outside our company which are doing business for their own marketing purposes.

Policies and Practices With Respect to Security of Personal Information

We restrict access to your personal information to a limited number of employees who need to know that information in order to provide you with our quality products and services. We maintain physical, electronic, and procedural safeguards that comply with federal and state standards to protect the privacy of your personal information.

THE STEPHENS STORY

An Independent Financial Services Leader

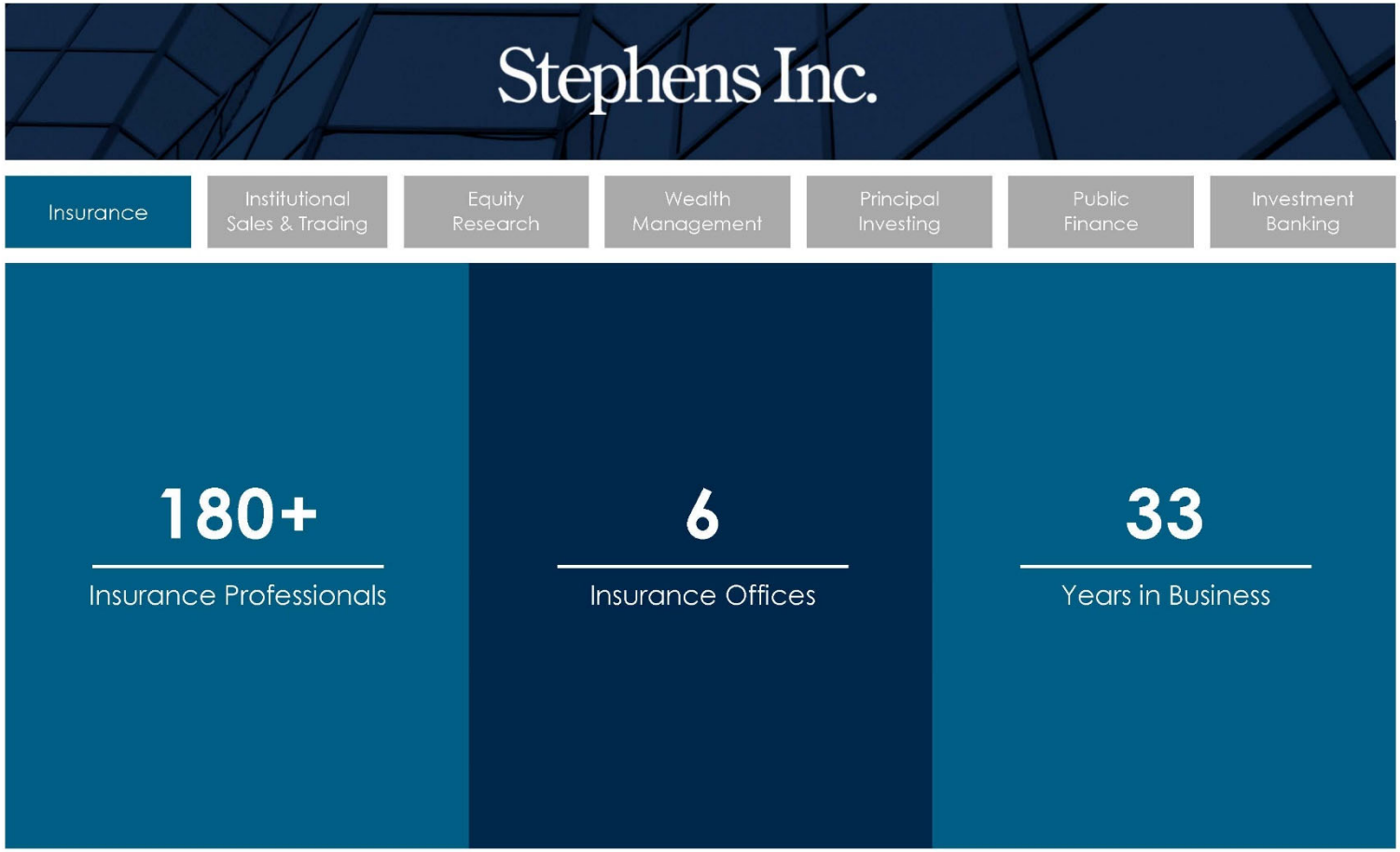

~ 600 ~

The Stephens Difference

Family Owned Since 1933

We are focused on – and invest in – the long term

Independent and Stable

A history of hard work and integrity has earned the trust of our clients

Trusted Risk Managers

Our goal is to be a trusted, innovative, and exceptional advisor and advocate for our clients.

Cross-Functional Teams

Robust in-house resources enable us to act in the best interest of our clients

Our Range of Offerings

Capital Management Institutional investment management, with a unique perspective that builds enduring value for our clients.	**Institutional Equities & Research** Objective, quality research covering 400+ companies in 40+ industries and sub-sectors, along with customized sales and trading solutions for clients in North America and abroad.	**Fixed Income Sales & Trading** Serving an international client base of individuals and major institutional accounts, with deep expertise in bond swaps, mortgage portfolio analysis and asset/liability management.
Insurance Annuities, life, health, employee benefits, pharmacy, and property & casualty insurance services and consulting for individuals, businesses and government entities.	**Investment Banking** Objective, expert advice on mergers and acquisitions, restructurings, recapitalizations, underwritings of public debt and equity securities, and private placements.	**Public Finance** Strategic solutions based on deep expertise in general obligations, sales tax, utilities, education, healthcare, housing and tax increment financing.
Stephens Capital Partners A financial partner for business owners and managers, investing capital for the Stephens family since the 1950s.	**Private Wealth Management** Assisting high-net worth families accumulate, enhance, and preserve wealth for future generations.	**Family Advisory** Connecting family businesses and family offices to the ideas, expertise, strategies and opportunities they need to protect and grow their assets.

CONFIDENTIAL AND PROPRIETARY INFORMATION OF STEPHENS INSURANCE, LLC

Property & Casualty Risk Resources

Claims Advocacy

- Review Certificates of Insurance
- Analyze policy language
- Aid in settlement of disputed claims

Claims Management

- Manage overall claims process with carriers
- Perform research to guard against inflation of losses
- Review of carrier handling "best practices"
- Conduct claim review sessions with casualty underwriters

Loss Control

- Assist with disaster preparedness
- Manage carrier requirement expectations
- Mock OSHA Inspections
- Conduct detailed "root cause" analysis
- Perform ergonomic assessments
- Develop underwriting risk reports

Risk Mitigation & Transfer

- Assist in avoiding risk via counter-party agreements
- Offer alternative indemnification language
- Potentially reduce client risk through limitation of liability terms
- Manage risk allocation agreements

Risk Financing Options

- Analyze retention and its effect on insurance premiums
- Generate potential outcome scenarios based on operational tendencies
- Offer self-funding or captive insurance solutions

CONFIDENTIAL AND PROPRIETARY INFORMATION OF STEPHENS INSURANCE, LLC

QUESTIONS?

Ron W. Adams
President, Fayetteville Office

Stephens Insurance, LLC
3425 N. Futrall Drive | Suite 201 | Fayetteville, AR 72703
Direct (479) 718-7446 | Cell (512) 541-9909
ron.adams@stephens.com | stephensinsurance.com

Wes Adams
Vice President | Commercial Property & Casualty

Stephens Insurance, LLC. a division of Stephens, Inc.
3425 N. Futrall Drive, Suite 201 Fayetteville, AR 72703
Direct (479)718-7408 | Toll Free (800)205-8613
wes.adams@stephens.com | www.stephensinsurance.com

Follow us on:

facebook.com/ about.stephens

linkedin.com/company/ stephens-inc

twitter.com/ stephens_inc

ORDINANCE NO. _____

AN ORDINANCE AUTHORIZING THE MAYOR AND THE CITY CLERK TO ENTER INTO AN AGREEMENT FOR THE CITY OF BENTONVILLE'S BUILDING AND PROPERTY INSURANCE AND WAIVING THE REQUIREMENT OF COMPETITIVE BIDDING.

NOW, THEREFORE, BE IT ORDAINED BY THE CITY COUNCIL FOR THE CITY OF BENTONVILLE, ARKANSAS.

Section 1: That the Mayor and City Clerk be and are hereby authorized to enter into an agreement with Stephens Insurance, LLC (insurance provided through Affiliated FM) for the City's Building and Property Insurance, in the amount of $373,275.00 as per the Proposal attached hereto as Exhibit A.

Section 2: Because Stephens Insurance acts as the City's insurance broker to ensure a carrier with the ability to meet the City's coverage needs, and because of the lack of other qualified providers willing to submit proposals for coverage and because of the critical need for continuation of coverage, it would be neither practical nor feasible to advertise for competitive bidding, and that requirement is herein waived.

PASSED and APPROVED this _____ day of _____, 2021.

APPROVED:

_____
MAYOR

ATTEST:

_____
CITY CLERK

Agenda Item Form

Date of City Council Meeting	**6/22/2021**
Department	**Finance/Accounting**
Submitted by	**Jake Harper**
Phone	**479-271-6781**

Item Type: (*Check Applicable Item Type*)

☑ Budget Adjustment	☐ Change Order	☐ Informational	☐ Ordinance	☐ Resolution	☐ Bid Award

Recommendation/Suggested Action *(Enter recommendation in space below)*:

Budget Adjustment in relation to the 2021 Property Insurance. The Electric Department increased the estimated replacement costs for substations based upon recent construction estimates. This budget adjustment provides for additional funds to pay for the increase in premiums related to that replacement cost increase. The total cost of property insurance is 373,275.00 with all but this amount of $21,959.00 budgeted.

Estimated Cost	**$ 21,959.00**
Is this Item Budgeted?	☐ Yes ☑ No

If no, please explain how item will be funded *(briefly explain in space below)* **:**

The total cost of property insurance is $373,275.00 with all but $21,959.00 budgeted. The remaining amount of $21,959 will paid from Utility Fund Reserves.

Budget Adjustment Request

Date of City Council Meeting	6/22/2021
Department	Finance/Accounting
Submitted by	Jake Harper
Phone	479-271-5966

Purpose of Budget Adjustment *(Enter purpose in space below):*
Budget Adjustment in relation to the 2021 Property Insurance renewal. The Electric Department increased the estimated replacement costs for substations based upon recent construction estimates. The total cost of property insurance is $373,275 with all but $21,959 budgeted. The unbudgeted amount is related to the needed funds to cover Electric Department replacement cost increase. The remaining amount of $21,959 will paid from Utility Fund Reserves.

General Ledger Account Information*				
Org (Department)	Object	Account Description	Revenue + (-)	Expense + (-)
503010	45210	Insurance		$ 21,959.00
		Totals	$ -	$ 21,959.00
		Net Impact on Fund Balance	$	(21,959.00)
*Final Account Number will be determined by Accounting Department after approval and purchase				

Agenda Item Form

Date of City Council Meeting	**6/22/2021**
Department	**Finance/Accounting**
Submitted by	**Jake Harper**
Phone	**479-271-6781**

Item Type: (*Check Applicable Item Type*)

☐ Budget Adjustment	☐ Change Order	☐ Informational	☑ Ordinance	☐ Resolution	☐ Bid Award

Recommendation/Suggested Action *(Enter recommendation in space below)*:

Ordinance to amend Sec 2-377 and Sec 2-378 of the Purchasing section of the Municipal Code to increase the dollar amount from $20,000 to $35,000 in each section. Amend Sec 2-377 to read "The mayor of the city or his duly authorized representative, shall have exclusive power and responsibility to make purchases of all supplies, apparatus, equipment, materials and other things requisite for public purposes for the city and to make all necessary contracts for work or labor to be done or material or other necessary things to be furnished for the benefit of the city where the amount of the expenditure for any purpose or contract does not exceed the sum of $35,000. Amend Sec 2-378 to read Except as provided otherwise herein, where the amount of expenditure for any purchase or contract exceeds the sum of $35,000.00, the mayor of the city, or his duly authorized representative, shall invite competitive bids thereon by legal advertisement in any local newspaper. Bids received pursuant to said advertisement shall be opened and read on the date set for receiving said bids, in the presence of the mayor, or his duly authorized representative. The contract shall be awarded to the lowest responsible bidder; provided, however, the mayor, or his duly authorized representative, may reject any and all bids received. The requirement of competitive bidding may be waived by ordinance of the city council in cases where it is not feasible. Pursuant to state law, contracts for professional services shall not be subject to competitive bidding.

Estimated Cost	
Is this Item Budgeted?	☐ Yes ☐ No
If no, please explain how item will be funded *(briefly explain in space below)* **:**	

ORDINANCE NO. _____

AN ORDINANCE AMENDING CERTAIN SECTIONS OF THE BENTONVILLE MUNICIPAL CODE PERTAINING TO PURCHASING.

NOW, THEREFORE, BE IT ORDAINED BY THE CITY COUNCIL FOR THE CITY OF BENTONVILLE, ARKANSAS.

Section 1: **That** Sec 2-377 of the Purchasing section of the Municipal Code be amended so that, after amendment, such section shall read as follows:

> The mayor of the city or his duly authorized representative, shall have exclusive power and responsibility to make purchases of all supplies, apparatus, equipment, materials and other things requisite for public purposes for the city and to make all necessary contracts for work or labor to be done or material or other necessary things to be furnished for the benefit of the city where the amount of the expenditure for any purpose or contract does not exceed the sum of $35,000.

Section 2: Amend Sec 2-378 so that, after amendment, such section shall read as follows:

> "Except as provided otherwise herein, where the amount of expenditure for any purchase or contract exceeds the sum of $35,000.00, the mayor of the city, or his duly authorized representative, shall invite competitive bids thereon by legal advertisement in any local newspaper. Bids received pursuant to said advertisement shall be opened and read on the date set for receiving said bids, in the presence of the mayor, or his duly authorized representative. The contract shall be awarded to the lowest responsible bidder; provided, however, the mayor, or his duly authorized representative, may reject any and all bids received. The requirement of competitive bidding may be waived by ordinance of the city council in cases where it is not feasible. Pursuant to state law, contracts for professional services shall not be subject to competitive bidding.

Section 3: That all ordinances or parts of ordinances in conflict herewith should be and the same are hereby repealed.

PASSED and APPROVED this _____ day of _____, 2021.

APPROVED:

_____
MAYOR

ATTEST:

_____
CITY CLERK

Agenda Item Form

Date of City Council Meeting	**6/22/2021**
Department	**Finance/Accounting**
Submitted by	**Jake Harper**
Phone	**479-271-6781**

Item Type: (*Check Applicable Item Type*)

☐ Budget Adjustment	☐ Change Order	☐ Informational	☐ Ordinance	☑ Resolution	☐ Bid Award

Recommendation/Suggested Action *(Enter recommendation in space below):*

Resolution to approve a Purchasing Policy.

Estimated Cost	
Is this Item Budgeted?	☐ Yes ☐ No

If no, please explain how item will be funded *(briefly explain in space below)* **:**

CITY OF BENTONVILLE
PURCHASING POLICY

Adopted: XXXX, 2021

TABLE OF CONTENTS

	Page
SECTION 1 Purchasing Department – Mission Statement and Purpose	3
SECTION 2 Purchasing Policy Introduction	
2.1 Applicable Laws	4
2.2 Authority of the Purchasing Manager	4
SECTION 3 Expenditure Below the Council threshold	
3.1 Quote Requirements	5
1. Exceptions to the Quote Requirements	5
2. Amounts Included in Quote Requirement Thresholds	5
3. Single Item Quote Requirement	5
4. Aggregate Total Quote Requirement	5
3.2 Procurement for Professional Services: Formal Selection Process Threshold	5
3.3 Emergency Purchase	7
3.4 Arkansas State Contract Purchases	7
3.5 Cooperative (Co-Op) Purchases	7
SECTION 4 Expenditure Meeting or Exceeding the Council Threshold	
4.1 Formal Sealed Competitive Bids	8
4.2 Procurement for Construction	10
4.3 Emergency Purchases	10
4.4 Waiver of Bid	11
4.5 Arkansas State Contract Purchases	11
4.6 Cooperative (Co-Op) Purchases	11
4.7 Procurement for Professional Services	12
1. Procurement for Declared Professional Services	12
2. Procurement for Undeclared Professional Services	13
4.8 Procurement for Services Resulting in Revenue	14
SECTION 5 Procurement Procedure Policies	
5.1 Local Procurement Preference	15
5.2 Encouragement for Participation	15
5.3 Split Purchasing Prohibited	15
5.4 Gifts Prohibited	16
5.5 Purchase Card Program (P-Card Program)	16

SECTION 1
Purchasing Department

Mission Statement
To help administrate City expenditures in a transparent, ethical, personalized and value-added manner, providing clarity and simplification internally, for vendors and for citizens of Bentonville.

Purpose
The Purchasing Department assists City Departments with actions related to the expenditure of City funds, ensuring expenditures and sales (surplus property) are processed in an open and competitive, legal manner according to applicable laws, and oversees internal programs supporting the efficient and legal expenditure of City funds, including but not limited to Purchase Cards (P-Cards) and vendor membership or reward programs.

SECTION 2
Purchasing Policy Introduction

This Policy is intended to serve as a guide to the Purchasing Department and to all City Departments in the conduct of their operations. Such standards shall not permit the procurement of items in violation of existing contractual obligations or any type of illegal procurement practices.

This Policy is not intended to be an exhaustive definition and does not include all procurement requirements and situations, but rather it is intended as a guideline for the specific types of procurement procedures outlined herein.

All procurement requirements, excluding the dollar amount threshold for City Council approval, shall be automatically adjusted in accordance with changes in Arkansas State Law at the time they become effective as if they were included herein.

This Policy has been written to primarily cover the following areas according to dollar amount thresholds, in addition to other policies related to the expenditure of funds:

a) Quote Thresholds
    i. Single item over $2,499.00
    ii. Aggregate total over $12,499.00
b) Professional Service Procurement Threshold
    i. Agreement total of 20,000.00 but less than $35,000.00
c) Council Approval Threshold
    i. Expenditures of $35,000.00 or more that are not on State Contract.

This Policy is designed to:

a) Ensure practices related to the expenditure of City funds are open and competitive, legal, transparent and fiscally responsible;
b) Simplify and standardize items or services being purchased;
c) Make the process of purchasing efficient for both internal Departments and vendors doing business with the City;
d) Eliminate unnecessary or unauthorized purchases.

2.1 Applicable Laws

The City's procurement laws, rules and practices shall follow all applicable state and local laws and ordinances, whether or not outlined in this Policy as if they were included herein. .

a) The dollar threshold for the requirement of Council approval shall be adjusted in accordance with Act 435 of Arkansas State Law, as follows: beginning January 1, 2025, and on each January 1 at subsequent five-year intervals, the amounts under this subdivision shall be adjusted to reflect the percentage increase in the Consumer Price Index for All Urban Consumers or its successor, as published by the United States Department of Labor for the five years immediately preceding the percentage increase, and rounded to the nearest whole number.
   It is the intent of this Policy to bring to City Council a request to increase the amount in accordance with state law at the time an adjustment to the amount is made.
b) The Purchasing Department shall consult with the City's Legal Department for evaluation of necessary revisions to this Policy; any material revision to this Policy requires approval from the Bentonville City Council.

2.2 Authority of the Purchasing Manager

The Purchasing Manager has the authority to approve or reject purchases, to determine solicitation methods, to approve or reject sole source justification, to waive quote requirements when in the best interest of the City or when the purchase classifies as sole source, and to institute procedures related to procurement practices. In the event that the need arises, the Finance Director or designee shall have the same authority as the Purchasing Manager.

SECTION 3
Expenditure below the Council threshold

3.1 Quote Requirements

The quote requirements are internal controls in place to ensure fiduciary responsibility in expenditure of City funds (state law does not govern these thresholds).

The quote requirements apply to all expenditures under this Section unless otherwise specified.

1. **Exceptions to the Quote Requirements**
   a) Expenditures under the quote thresholds outlined in this policy;
   b) Repairs;
   c) Replacement items, which require use of the same exact item due to equipment or processes currently in place where the functionality or façade is dependent on use of the exact item;
   d) Sole Source purchases (with documentation/justification approved by the Purchasing Manager);
   e) Waivers to the quote requirements approved by the Purchasing Manager in writing;
   f) When quotes are not required, purchasers are still encouraged to obtain quotes when possible, or when pricing appears not to be in the best interest (value) to the City.

2. **Amounts Included in Quote Requirement Thresholds**

The total expenditure, including all taxes, delivery fees and other charges is subject to the quote thresholds. Taxes, delivery fees and accessorial charges do not constitute as multiple items.

Example: If a single item has a cost of $2,450.00 pre-tax, the single item quote threshold would apply since the total cost for that item would be $2,682.75 after tax (9.5%).

3. **Single Item Quote Requirement: $2,500.00 or More**
   a) **Definition**: Expenditures for a single item with a cost of $2,500.00 or more.
   b) **Requirement**: Three quotes. Quotes can either be notated on the Requisition by the purchaser or hard copy quotes can be attached. Hard copy means written format and can include emails, online shopping carts etc. Documentation of the quotes obtained must be included in the Requisition submitted for the purchase.

4. **Aggregate Total Quote Requirement: $12,500.00-$34,999.99**
   a) **Definition**: Expenditures for multiple items (aggregate total) with a total cost of $12,500.00 or more. The Single Item Quote Threshold applies for any single item in the purchase with a cost of $2,500.00 or more.
   b) **Requirement**: Three hard copy quotes. Hard copy means written format and can include emails, online shopping carts etc. Documentation of the quotes obtained must be included in the Requisition submitted for the purchase.

3.2 Procurement for Professional Services: Formal Selection Process Threshold

A Professional service is defined as a service that has been declared in Arkansas State Law (§19-11-800) as such, or has been declared a professional service by a 2/3 vote from the City Council.

a) The procurement policies for professional services, as outlined in this Section, apply to agreements with a total cost of $20,000.00 or more (but less than $34,999.00).
b) Agreements with a total cost less than $20,000.00 do not require a formal selection process.

1. Procurement for Declared Professional Services

This Section shall govern the procurement methods used for professional services as declared by state law or City ordinance that meet the Formal Selection Process Threshold.

A) **Annual Statement of Qualifications:** Annually, the Purchasing Department shall solicit Statements of Qualifications from firms providing the professional services for the City's 'Annual Statement of Qualifications List' (hereinafter referred to as the 'List').

(1) **Advertisement:** The request shall be published statewide in a newspaper (or in other approved manners, such as online, pursuant to current applicable laws).
   a. A minimum of three weeks shall be allowed for firms to submit their Statement of Qualifications.

(2) **Submissions Post Deadline:** Firms may submit their Statement of Qualifications after the deadline listed in the advertisement, provided that they meet all requirements; however, depending on when the firm submits, they may not be considered for projects that are already initiated.

(3) **Selection:** The City Department in charge of the project shall select a minimum of three firms from the List for evaluation.
   a. In the event that the List does not contain the minimum amount of firms to be selected for evaluation whom offer the services needed, all firms on the List whom offer the services needed shall be selected for evaluation.
   b. The firms selected shall be notified of their selection.
   c. A Selection Committee shall be formed to evaluate the submissions. Evaluation shall be based on the criteria included in §19-11-800 et seq., as well as additional project specific criteria based on the Department's needs.
   d. Selection shall be in accordance with §19-11-800 et seq.
   e. Once selection has been made and contract negotiations have been finalized, firms shall be notified of their status (i.e. not selected for award).

(4) **Award:** The selected firm shall be formally notified that they have been awarded the contract.

(5) **Agreement:** The agreement shall be fully executed prior to Requisition entry.

B) **Request for Qualifications:** For procurement of professional services, when use of the List is not practical, a Request for Qualifications shall be issued.

(1) **Notification:** Notification shall be published on the City's website and emailed to potential service providers.

(2) **Solicitation Period:** A minimum of ten days shall be allowed for firms to submit Statements of Qualifications.

(3) **Deadline:** No submissions shall be accepted past the deadline stated in the notification.

(4) **Evaluation:** Evaluation of the submissions shall be in accordance with §19-11-800 et seq.

(5) **Selection:**
   a. A Selection Committee shall be formed consisting of at least three members to evaluate the submissions.
   b. Evaluation shall be based on the criteria included in §19-11-800 et seq., as well as additional project specific criteria based on the City Department's needs.
   c. The Selection Committee may choose to, but is not required to, conduct interviews with any or all of the submitting firms.
   d. Selection shall be in accordance with §19-11-800 et seq.
   e. Once selection has been made and contract negotiations have been finalized, firms shall be notified of their status.

(6) **Award:** The selected firm shall be formally notified that they have been awarded the contract.

(7) **Agreement:** The agreement shall be fully executed prior to Requisition entry.

3.3 Emergency Purchases

Emergency purchase means the acquisition of commodities or services, which if not immediately initiated, will endanger human life or health, City or otherwise state property, or the functional capability of the City.

a) The requesting Department is required to notify the Purchasing Manager of the emergency purchase need and state that the emergency applies to the meaning of an 'Emergency Purchase'.
b) The Purchasing manager shall have the authority to approve or reject the emergency purchase, based on the justification submitted by the Department for the purchase.

3.4 Arkansas State Contract Purchases

a) Purchases from Arkansas State Contract are excluded from the quote requirements.
b) Documentation of the State Contract, including documentation that each item being purchased is included on the Contract, is required to be included on the Requisition for the purchase.

3.5 Cooperative (Co-Op) Purchases

a) Purchases through a cooperative contract meeting the following requirements are excluded from the quote requirements:
    i. The City is a member of the cooperative;
    ii. The cooperative is intended or otherwise directed for municipal use, as determined by the Purchasing Manager.
    iii. Documentation of the Co-Op contract, including documentation that each item being purchased is included on the Contract, is required to be included on the Requisition for the purchase.

SECTION 4
Expenditure meeting or exceeding the Council threshold

Except as provided for herein or by law otherwise, any expenditure for any purchase or contract with a cost of $35,000.00 or more requires approval from the Bentonville City Council prior to purchase, signing of any documents or any other type of purchase completion.

a) This Section is governed by Arkansas State Law and City of Bentonville Ordinance including, but not limited to:
    i. State Law: §14-47-138, §14-58-303
    ii. City Ordinance: Sec.2-377-Sec.2-378.
b) Expenditures of $35,000.00 or more are subject to the formal procurement methods herein, in accordance with laws applicable to the specific type of expenditure (type of service, item, project, associated funds, etc.).
    i. In the event that the required procurement method is not contained in this Policy, Arkansas State Law shall govern the type of procurement and process used.
c) Purchases excluded from this shall be in accordance with §14-58-104.
d) City Departments are required to consult with the Purchasing Manager for any expenditure of $35,000.00 or more to ensure procurement is in accordance with applicable laws and requirements.
e) When this Section references a minimum requirement for the advertisement/solicitation period (ten days) it shall be understood that while this is the minimum requirement, the Purchasing Department's recommendation for any solicitation is to have an advertisement/solicitation period of twenty-one days or more (not to exceed ninety days).

4.1 Formal Sealed Competitive Bids

Except as provided for otherwise herein or in accordance with state law, where the amount of the expenditure for any purchase or contract exceeds the sum of $35,000.00 formal competitive sealed bids must be solicited in accordance with state law (§14-58-303).

A) **General:** Contracts made for purchases of goods, services or other items exceeding $35,000.00 shall be made by legal advertisement published in a newspaper with local circulation (or in other approved manners, such as online, pursuant to current applicable laws). The advertisement shall state that bids will be received, opened, and read in public at a particular time, place and date. Bids received pursuant to such advertisement shall be opened no less than ten (10) days (excluding the first day of advertisement) from the first day of advertisement. Such bids shall be made on the bid documents and specifications prepared by the Purchasing Department, or engineer/architect prepared bid documents approved by the Purchasing Manager, and shall be received in a sealed envelope or other appropriate container and not opened until the time established by the advertisement.

B) **Purchase Type Specific Requirements:** Advertisement, solicitation period, pre-bid meeting, bid and performance and payment bond, and other process requirements apply to certain types of purchases dependent on the funding, type of project or application of particular items. The Purchasing Manager is responsible for identifying the specific requirements for any sealed competitive bid solicitation to ensure it is in accordance with applicable laws.

C) **Invitation for Bid (IFB) Document and Bid Evaluation:** The bid documents and specifications shall be definite and specific. Award shall be made to the most responsive and responsible lowest bidder, with evaluation factors including, but not limited to cost, determination of compliance with the specifications and conditions specified in the bid documents, and the bidders past performance with the City. The Purchasing Manager may use judgmental consideration to determine if the bidder's offer complies with the specifications and conditions if such considerations can be demonstrated to be reasonable, appropriate, and fairly applied. The Purchasing Manager will rely on the Department for determination of any bidder's ability to meet the technical specifications of the bid.

D) **Signing of Bid Submission:** All bid submissions must be signed by a person authorized to bind the individual or company to the agreement.

E) **Non-Responsive Bids:** The Purchasing Manager has the authority to reject any bid, which is materially non-responsive to the requirements set forth in the bid documents, as determined by the Purchasing Manager. The following non-responsive items shall result in automatic rejection of any bid submission:
   (1) The bid is submitted late (ex. if the bid opening time is 1:30pm, all bids must be submitted prior to 1:30pm);
   (2) The bid is unsigned;
   (3) A bid bond is not included (when required).

F) **Cancelation of Award:** The Purchasing Manager has the authority to cancel award of a solicitation if, in their discretion and the City Department's (over the project) discretion, bids received do not meet the City's needs or for any other reason where award would not be in the City's best interest.

G) **City's Right to Reject and Waive Informalities:** The City of Bentonville shall have the right to reject any or all bids and to waive informalities according to the City's best interest.

H) **Withdrawal of Bids:** Bids may be withdrawn by the bidder after submission for revisions or modifications at any time prior to the deadline for receipt of bids (or bid opening). Any such request for withdraw must be in writing either by email or other acceptable electronic manner as outlined in the bidding documents, hand delivered or mailed communication. After bids are opened, they shall be irrevocable for the period specified in the bid documents, unless a nonjudgmental mistake (such as a math error), as determined by the Purchasing Manager, is suspected by the Purchasing Manager or the bidder, or unless bidder is permitted to withdraw their bid pursuant to Arkansas State Law.

I) **Nonjudgmental Bid Document Mistakes:** If a nonjudgmental mistake is suspected, such as a math error, the bidder shall submit a written request to the Purchasing Department requesting either to withdraw their bid submission or to correct the nonjudgmental mistake. In the event that the City becomes aware of the mistake prior to the bidder, the bidder shall respond within two (2) days of receiving notification of the discovery with a written request to the Purchasing Department to verify a correction or requesting to withdraw their bid. Any such request for withdraw or correction must be in writing either by email (or other acceptable electronic manner as outlined in the bidding documents), hand delivered or mailed communication. Once a bid has been verified, it shall be considered submitted, as verified.
   (1) In the event of discrepancy between a unit price and an extended price, the unit price shall govern.
   (2) At no point shall a correction of a mistake result in reduction or increase of a Bidder's unit price(s). If correction of the mistake would result in either an increase or decrease in the unit price, the bid shall be considered nonresponsive and shall be rejected.

J) **Permit to Withdraw**: The City shall permit a bidder to withdraw its bid without penalty or forfeiture of bid security if: (a) a nonjudgmental mistake is evident on the face of the bid, or (b) the bidder establishes by clear and convincing evidence that a nonjudgmental mistake was made.

K) **Multiple Bids:** Bidders are prohibited from submitting multiple bids for the same product in response to a competitive sealed bid solicitation. In the event that a bidder submits multiple bids for the same product, all bids from that bidder will be rejected.

L) **Exception for Different Models:** In the event that the bidder believes they have multiple different models or products (such as equivalent items) that meet the City's specifications, the bidder may submit multiple bids in response to a competitive sealed bid solicitation as long as the following requirements are met:
   (1) The bids are submitted in separate sealed envelopes;
   (2) The products being proposed in each submission are different makes, models or otherwise types of products.

M) **Tie Bids:** In the event that two or more bids are submitted for the same price, award shall be made to the most responsive and responsible bidder as determined through evaluation by the Purchasing Manager and Department requesting the bids.

N) **Bid Security/Bid Bond:** If it is determined that a bid security (bond) is required for a certain sealed bid solicitation, the bid security shall be in the form of a bid bond, certified check or cashier's check in the amount specified in the bidding documents. The cashier's check shall not have an expiration date causing the check to be void less than 120 days of the bid opening date. No personal or company checks shall be accepted as a bid security. Unless otherwise specified in the bidding documents, the amount of the bid security shall be 5% of the total bid price. The bid security shall be payable without condition to the City of Bentonville.

(1) The bid security for the lowest three bids shall be retained until the bid has been awarded.

(2) The bid security, if in the form of a certified check or cashier's check, shall be returned to unsuccessful bidders after the bid has been awarded; the bid security may be returned to unsuccessful bidders prior to the bid award if they did not submit one of the lowest three bids. If submitted in the form of a bid bond, the bid bond shall only be returned to the bidder if requested by the bidder via written communication.

(3) Applicable laws shall govern the requirement for a bid security or in the event that there are no applicable laws, at the discretion of the Purchasing Manager.

O) **Re-Bid:** The Purchasing Manager may re-solicit bids for any reasons determined to be in the City's best interest. Such re-solicitation shall not be for the purpose of directing the award to a particular bidder. In the event that the original request for bids received no responses or no responsive responses, a re-bid invitation shall be issued. The re-bid invitation shall clearly state that it is a re-bid of the original solicitation, if the exact item/services is being re-bid. In the event that the re-bid invitation receives no responses or no responsive responses and the Department is aware of a vendor able to perform the service, but which did not respond to the invitation for bid or re-bid, it shall be determined to be impractical to re-bid and may be recommended to the City Council as a Waiver of Bid.

P) **Award:** The lowest, most responsible and responsive bid that meets the City Department's needs and is in the City's best interest shall be selected for award.

4.2 Procurement for Construction

Construction services, including procurement of a Construction Manager, shall be procured in accordance with state law, including but not limited to the following Statutes:

a) §14-58-303: Purchases-Contracts
b) §14-58-1001: Projects Exceeding Two Million Dollars
c) §22-9-203: Public Improvements Generally
d) Solicitation procedures under these statutes shall be orchestrated by and approved by the Purchasing Manager.

4.3 Emergency Purchases

Emergency purchase means the acquisition of commodities or services, which if not immediately initiated, will endanger human life or health, City or otherwise state property, or the functional capability of the City.

a) Emergency purchases shall be in accordance with Arkansas Statute §19-11-204.
b) The requesting City Department is required to notify the Purchasing Manager of the emergency purchase need and state that the emergency applies to the meaning of an 'Emergency Purchase'.
c) The Purchasing Manager shall have the authority to approve or reject the emergency purchase, based on the justification submitted by the City Department for the purchase.
d) In the event that the emergency purchase exceeds the $35,000.00 threshold, the emergency purchase requires approval from the Mayor and shall be presented to the City Council at the next available City Council meeting for notification of the emergency purchase made.

4.4 Waiver of Bid

Waiver of Bid is waiving the requirement to competitively solicit bids.

A) A City Department may request a Waiver of Bid in the event that the following applies:
- (1) It is an Emergency Purchase (as defined in Section 2, 2.01, 4-Emergency Purchases);
- (2) It is a Sole Source purchase, meeting the following requirements:
  - i. The item or service is only available from one supplier or manufacturer. For the sole source purchase of an item, a formal letter is required from the manufacturer stating the sole source nature;
  - ii. Replacement items, which require use of the same exact item due to equipment or processes currently in place where the functionality is dependent on use of the exact item;
  - iii. The item or service has been approved by the Purchasing Manager in writing, as sole source based on the evidence provided by the City Department;
- (3) The sealed competitive bid process is determined to be not feasible or practical by the Purchasing Manager in writing, or as provided under state law (§ 14-58-104).

B) A Waiver of Bid purchase shall not exceed $1,000,000.00 except in qualifying circumstances where soliciting bids, or use of any other legal form of competitive procurement, is not feasible or practical.

C) The Waiver of Bid request requires written approval from the Purchasing Manager, Finance Director or Mayor prior to being submitted to the City Council.

4.5 Arkansas State Contract Purchases

Purchases from Arkansas State Contract, including those pursuant to §14-58-104, are excluded from the requirements set forth for formal procurement processes and approval from the City Council. These contracts are determined to have been solicited through a competitive or otherwise legal manner.

a) The use of an Arkansas State Contract for purchases of $35,000.00 or more requires approval from the Purchasing Department.

4.6 Cooperative (Co-Op) Purchases

A) Purchases through a cooperative contract shall be permitted when the following requirements are met:
- (1) The City is a member of the cooperative;
- (2) The cooperative is intended or otherwise directed for municipal use, as determined by the Purchasing Manager;
- (3) The cooperative contract has been properly vetted by the Purchasing Department in regards to its compliance with procurement laws, specifically its similarity to or otherwise compliance with Arkansas procurement laws;
- (4) The Purchasing Manager has provided written approval for use of the cooperative contract and subsequent presentation to the City Council for award.

4.7 Procurement for Professional Services

A Professional Service is defined as a service that has been declared in Arkansas State Law (§19-11-800) as such, or has been declared a professional service by a 2/3 vote from the City Council.

a) In accordance with state law, professional services, as declared by state law or City ordinance, shall not be competitively bid and the procurement methods for 'Declared Professional Services' herein shall apply;
b) For services requiring a professional, which are not declared professional services by state law or City ordinance, the procurement methods for 'Procurement for Undeclared Professional Service' herein shall apply;
c) For services resulting in revenue for the City, the procurement methods for 'Procurement for Services Resulting in Revenue' herein shall apply;
d) The final Agreement for any declared professional services, undeclared professional services and services resulting in revenue shall be included in the packet for presentation to City Council.

1. Procurement for Declared Professional Services

This Section shall govern the procurement methods used for professional services as declared by state law or City ordinance.

A) **Annual Statement of Qualifications:** In accordance with §19-11-800 et seq., annually, the Purchasing Department shall solicit Statements of Qualifications from firms providing the professional services for the City's 'Annual Statement of Qualifications List' (hereinafter referred to as the 'List').
   (1) **Advertisement:** The request shall be published statewide in a newspaper (or in other approved manners, such as online, pursuant to current applicable laws).
      i. A minimum of three weeks shall be allowed for firms to submit their Statement of Qualifications.
   (2) **Submissions Post Deadline:** Firms may submit their Statement of Qualifications after the deadline listed in the advertisement, provided that they meet all requirements; however, depending on when the firm submits, they may not be considered for projects that are already initiated.
   (3) **Review with Purchasing Department:** The City Department requiring use of the List shall notify the Purchasing Department and review the project and budget amount. The Purchasing Manager shall have the authority to approve use of the List for these Projects or to require a Request for Qualifications be issued based on the Purchasing Manager's determination after evaluation of factors such as the project type, budget amount and number of firms on the List whom offer the services needed.
   (4) **Evaluation:** The City Department in charge of the project shall select a minimum of three firms from the List for evaluation.
      i. In the event that the List does not contain the minimum amount of firms to be selected for evaluation whom offer the services needed, all firms on the List whom offer the services needed shall be selected for evaluation.
      ii. The firms selected shall be notified of their selection.
      iii. A Selection Committee shall be formed to evaluate the submissions. Evaluation shall be based on the criteria included in §19-11-800 et seq., as well as additional project specific criteria.
   (5) **Selection:** Selection shall be in accordance with §19-11-800 et seq.
      i. Once selection has been made and contract negotiations have been finalized, firms shall be notified of their status (i.e. not selected for award).

B) **Request for Qualifications:** For procurement of professional services, when use of the List is not deemed practical, a Request for Qualifications shall be issued.

(1) **Advertisement:** An advertisement shall be published in a newspaper with local circulation (or in other approved manners, such as online, pursuant to current applicable laws) requesting Statements of Qualifications for the services.
    i. A minimum of ten days shall be allowed for firms to submit sealed Statements of Qualifications.
(2) **Deadline:** No submissions shall be accepted past the deadline stated in the advertisement. Submissions received after the deadline shall be rejected and may be returned to the submitting party at their expense.

(3) **Evaluation:** Evaluation of the submissions shall be in accordance with §19-11-800 et seq.
    i. A Selection Committee shall be formed consisting of at least three members to evaluate the submissions.
    ii. Evaluation shall be based on the criteria included in §19-11-800 et seq., as well as additional project specific criteria.
    iii. The Selection Committee may choose to, but is not required to, conduct interviews with any or all of the submitting firms.
(4) **Selection:** Selection shall be in accordance with §19-11-800 et seq.
    i. Once selection has been made and contract negotiations have been finalized, firms shall be notified of their status.

2. Procurement for Undeclared Professional Services

A Service that has not been declared a professional service by state law or City ordinance may be evaluated for procurement through a Request for Proposals solicitation and awarded through the City Council as a Waiver of Bid, provided that the service is one that is not feasible or practical to bid, as determined by the Purchasing Manager's review of the City Department's justification. If a Request for Proposals solicitation is approved by the Purchasing Manager, solicitation shall be in accordance with the below.

(1) **Advertisement:** An advertisement shall be published in a newspaper with local circulation (or in other approved manners, such as online, pursuant to current applicable laws) requesting sealed proposals.
    i. A minimum of ten days shall be allowed for interested parties to submit their proposals.
(2) **Deadline:** No submissions shall be accepted past the deadline stated in the advertisement.
    i. Submissions received after the deadline shall be rejected and may be returned to the submitting party at their expense.
(3) **Evaluation Criteria:** The criteria which will be used for evaluation shall be clearly defined in the solicitation documents and may also be included in the advertisement.
(4) **Selection:** A Selection Committee shall be formed, consisting of a minimum of three members.
    i. The Selection Committee shall evaluate the proposals and rate them based on the criteria outlined in the Request for Proposals.
    ii. Interviews may be conducted, but are not required.
    iii. The Selection Committee shall select the Proposal which received the highest rating.
    iv. Negotiation: The City Department may negotiate pricing and services with the selected proposer.

4.8 Procurement for Services Resulting in Revenue

Services for the City which result in revenue (such as concessions), shall be solicited via a Request for Proposals solicitation. A solicitation for these types of services requires approval from the Purchasing Manager. If a Request

for Proposals solicitation is approved by the Purchasing Manager, solicitation shall be in accordance with the below.

(1) **Advertisement:** An advertisement shall be published in a newspaper (or in other approved manners, such as online, pursuant to current applicable laws) with local circulation requesting sealed proposals.
    i. A minimum of ten days shall be allowed for interested parties to submit their proposals.
(2) **Deadline:** No submissions shall be accepted past the deadline stated in the advertisement. Submissions received after the deadline shall be rejected and may be returned to the submitting party at their expense.
(3) **Evaluation:** The criteria which will be used for evaluation shall be clearly defined in the solicitation documents or advertisement.
(4) **Selection:** A Selection Committee shall be formed, consisting of a minimum of three members.
    i. The Selection Committee shall evaluate the proposals and rate them based on the criteria outline in the Request for Proposals.
    ii. Interviews may be conducted, but are not required.
    iii. The Selection Committee shall select the Proposal which received the highest rating.
(5) **Negotiation:** The City Department may negotiate payments to the City and services with the selected proposer.

SECTION 5
Procurement Procedure Policies

5.1 Local Procurement Preference

Pursuant to §14-58-105, in the procurement of public works projects, capital improvements, commodities, materials, equipment, and services procured by the City, the following local preference shall be granted:

A) **Category 1 Local Firm Resident:** For bidders whom meet the definition of "local firm resident" in the City of Bentonville, the following percentage preference shall be applied: **5%** preference from the total cost proposed.

B) **Category 2 Local Firm Resident:** For bidders whom meet the definition of "local firm resident" in the Fayetteville-Springdale-Rogers Metropolitan Statistical Area, as defined by the Census Bureau: **2.5%** preference from the total cost proposed.

(1) In no event, for either category, shall the total amount of the preference exceed 10% of the current sealed bid threshold or other dollar amount threshold requiring approval from the City Council.
(2) In no event, for either category, shall the total amount of the preference cause the purchase price to exceed the budget amount or other dollar figure set (such as an engineer's estimate) for the item or service. In the event that the preference causes the purchase price to exceed the budget amount or other dollar figure set for the item or service, there shall be no local preference granted.
(3) For either category to be eligible for execution of the local preference, they must provide proof in their submission that they are eligible to meet the definition of a "local firm resident". In no event shall the City be responsible for researching or otherwise determining a bidder to be a "local firm resident" when that Bidder has not clearly identified and proven themselves to be eligible as such.
(4) The Local Procurement Preference shall not apply to the procurement of professional services as declared by state law or City ordinance.

5.2 Encouragement for Participation

a) For the expenditure of funds, it shall be the policy of the City of Bentonville to encourage the development and participation of small, minority owned and women owned businesses. The City shall actively encourage utilization of these businesses for City contracts as both prime and subcontractors, and each City Department shall be encouraged to develop goals for the inclusion of these businesses.
b) It shall be the policy of the Purchasing Department to make reasonable accommodations, as permitted by law, to encourage the participation of these businesses in the procurement of goods and services. These accommodations may include but are not limited to offering introductory meetings for information regarding how the City procures goods and services, offering solicitation instructions in the business's primary spoken language when possible, and the prohibiting of solicitation methods and/or timelines which would knowingly prohibit participation by small, minority owned, women owned or disadvantaged businesses.
c) The City shall refer to state and federal definitions of small, minority owned, women owned businesses.

5.3 Split Purchasing Prohibited

a) No City employee shall cause a purchase to be split into smaller amounts for the purpose of avoiding applicable procurement laws or City policies. Split purchasing means separating a purchase that exceeds a purchase limit or threshold into two or more transactions as a means of avoiding the rules or restrictions that apply to purchases above the limit or threshold.

5.4 Gifts Prohibited

a) Any City of Bentonville employee in the Purchasing Department shall be prohibited from receiving gifts of any kind, for any dollar amount, from vendors or parties otherwise interested in or currently doing business with the City.
b) Gifts include, but shall not be limited to: food for the Purchasing staff, drinkware, shirts, tickets, candies, discounts, or any other type of gift.

c) In the event that an employee of the Purchasing Department is not on-site to refuse receipt of a gift delivered, the Purchasing Manager shall deliver the items to the Human Resource Department for donation or use in other Departments and alert the gifting party of the City's policy for employees of the Purchasing Department.

5.5 Purchase Card Program (P-Card Program)

The City operates a Purchase Card (P-Card) program, which City Departments may choose to participate in by requesting a P-Card for themselves, their Department, or other City staff members in their Department.

A) The P-Card shall not be used to replace traditional procurement methods; however, P-Cards are essential when placing orders over the Internet and they simplify the purchase of low-dollar value goods.

B) The P-Card may be issued directly in the name of the cardholder or in the Department's name (for group use). Graphics on the card make it easy to distinguish the City's P-Card from a personal card. The City's P-Card is a privilege granted by the City and this privilege may be revoked at any time for any reason.

C) P-Card holder shall strictly follow the policies and practices set forth herein.

D) The City's purchasing guidelines (quote requirements, etc.), City ordinances, and state laws apply to all P-Card purchases.

E) A City P-Card shall only be used for official City of Bentonville business. Cardholders shall not make unauthorized or prohibited purchases. The unauthorized or prohibited use of a City P-Card is grounds for immediate revocation of all P-Card privileges.

F) Only authorized City of Bentonville employees may use the P-Card.

G) In situations where a Department is supplied with a P-Card, a designated person should be appointed for reconciling the Statements and keeping track of receipts. In this situation, the Department Head is considered the cardholder and is responsible for all charges, receipts and for approval of Department staff using the P-Card.

H) In the event that a cardholder authorizes another City staff member to use their P-Card, the cardholder is fully responsible for all charges and receipts and for retrieving their P-Card.

I) A violation is considered anything that is an improper, unauthorized or prohibited use, handling and/or reporting of a P-Card. Two (2) instances of violations within a one (1) year period will result in loss of P-Card use for one (1) year and may result in additional disciplinary action.

J) In the event that the P-Card is used for purchases and/or services that require a contract or agreement to be signed, the purchase is prohibited until the contract or agreement is reviewed by the Legal Department and signed by the Mayor.

K) The cardholder is responsible for and must ensure that there are sufficient funds (credit limit) in the account that will be used to pay for the purchase.

L) Cardholders or Department's designated persons can check their credit limit by logging into centresuite.com using credentials provided to them upon P-Card issuance.

M) A temporary credit limit increase can be requested from the Accounting Department; no credit limit increase shall be granted without Department Head approval.

N) The cardholder must obtain a receipt at the point of purchase and verify it for accuracy. The cardholder is responsible for all receipts and charges. Lost or delayed receipts will be considered a violation and will be grounds for revocation of all P-Card privileges. Receipts are required to include at minimum, the following information:

(1) Vendor name
(2) Vendor address (when applicable)
(3) Itemized amounts for items, taxes, fees and any other charges
(4) Total charge amount
(5) Description of items being purchased
(6) Date of transaction

(O) The cardholder is responsible for the timely review and reconciliation of P-Card Statements, and for adhering to all requirements for reconciling P-Card Statements. Untimely or improper P-Card Statement reconciliation is considered a violation.

(P) For Departments utilizing one card for the Department, the employee(s) using the P-Card must promptly submit receipts for their purchases to their designated person.

(Q) The P-Card must be kept secure at all times. Cardholders should keep their P-Card in a locked drawer or other locked location unless it is in use. When in use, cardholders must ensure that it is being stored in a secure manner that prevents fraudulent or unauthorized charges, theft, or loss of the P-Card.

(R) The cardholder must notify the Accounting Department by emailing immediately of a lost or stolen P-Card, fraudulent activity, discrepancies, and unauthorized or prohibited purchases.

(S) P-Cards are property of the City of Bentonville, and the City has the unconditional right to cancel or revoke a P-Card at any time. Cardholders shall immediately surrender the card upon the City's request, or upon the end of their employment with the City.

(T) P-Cards can only be surrendered to a Department Head or a manager or other authorized employee in the Accounting Department.

(U) The least expensive item that suits the needs of the purchase should be what is purchased.

(V) Cardholders shall adhere to the City's Travel Policy when using their P-Card for travel related expenses.

(W) Cardholders should limit saving the P-Card on any mobile applications or web browsers to reduce the chance of fraudulent or unauthorized activity. In the event that a P-Card must be saved or used in an mobile application (such as a vendor's mobile app) or web browser, the cardholder should immediately delete the P-Card from the payment methods to avoid the accidental use of a P-Card for personal purchases.

(X) Saving a P-Card on some vendor websites (such as Amazon) is often unavoidable; however, cardholders should frequently check their account for fraudulent or unauthorized activity.

(Y) Unauthorized use, including prohibited purchases, requires that the cardholder immediately submit repayment of all unauthorized charges to the City's Accounting Department. When reconciling the P-Card Statement containing the unauthorized charge, the cardholder must upload a Memo explaining the unauthorized use and stating that repayment has been submitted to the City.

(Z) All cardholders must complete P-Card training and sign the Purchase Card User Agreement prior to issuance of a P-Card.

RESOLUTION NO. _____

A RESOLUTION AUTHORIZING THE MAYOR AND CLERK AND APPROVING A PURCHASING POLICY.

NOW, THEREFORE, BE IT RESOLVED BY THE CITY COUNCIL FOR THE CITY OF BENTONVILLE, ARKANSAS.

Section 1: That the Mayor and Clerk's Purchasing Policy is hereby approved, as set forth in the agreement attached hereto as Exhibit "A".

Section 2: This resolution shall be in full force and effect from and after the date of its passage, provided, however, that the purchasing limits set forth by state law shall become effective on the date the state law amendments become effective.

PASSED and APPROVED this _____ day of _____, 2021.

APPROVED:

_____
MAYOR

ATTEST:

_____
CITY CLERK

Agenda Item Form

Date of City Council Meeting	**6/22/2021**
Department	**Finance/Accounting**
Submitted by	**Jake Harper**
Phone	**479-271-6781**

Item Type: (*Check Applicable Item Type*)					
☐ Budget Adjustment	☐ Change Order	☐ Informational	☐ Ordinance	☑ Resolution	☐ Bid Award

Recommendation/Suggested Action *(Enter recommendation in space below):*

Resolution to approve a Fund Balance and Reserve Policy.

Estimated Cost	
Is this Item Budgeted?	☐ Yes ☐ No

If no, please explain how item will be funded *(briefly explain in space below)* **:**

CITY OF BENTONVILLE
Fund Balance and Reserve Policy

Adopted: XXXX, 2021

Fund Balance and Reserve Policy

I. Purpose

To establish a policy for the administration of reserves defined as fund balances in the governmental funds and net working capital in proprietary funds.

In addition, prudent financial management dictates that some portion of the funds available to the City be reserved for future use, to mitigate risk and to support seasonal variation in cash flows.

II. Classifications of Fund Balance

a. For Governmental Funds, the Governmental Accounting Standards Board ("GASB") Statement No. 54 defines five specific classifications of fund balance. The five classifications are intended to identify whether the specific components of fund balance are available for appropriation and are therefore "Spendable." The classifications also are intended to identify the extent to which fund balance is constrained by special restrictions, if any. Applicable only to governmental funds, the five classifications of fund balance are as follows:

   i. Non-spendable - Non-spendable fund balance: That portion of fund balance that includes amounts that are either (a) not in a spendable form, or (b) legally or contractually required to be maintained intact.

   ii. Restricted - The portion of fund balance that reflects constraints placed on the use of resources (other than non-spendable items) that are either (a) externally imposed by creditors, grantors, contributors, or laws or regulations of other governments; or (b) imposed by law through constitutional provisions or enabling legislation.

   iii. Committed - That portion of a fund balance that includes amounts that can only be used for specific purposes pursuant to constraints imposed by formal action by the government's highest level of decision making authority, and remain binding unless removed in the same manner. The City considers a resolution to constitute a formal action for the purposes of establishing committed fund balance. The action to constrain resources must occur within the fiscal reporting period; however the amount can be determined subsequently.

   iv. Assigned - That portion of a fund balance that includes amounts that are constrained by the City's intent to be used for specific purposes but that are not restricted or committed. This policy hereby delegates the authority to the Mayor or designee to modify or create new assignments of fund balance. Constraints imposed on the use of assigned amounts may be changed by the Mayor or designee.

   v. Unassigned – The remaining portion of fund balance that does not fit into the categories above. The City of Bentonville's Unassigned Fund Balance contains the

Stabilization and Contingency Reserve (see section III) and the residual reserve (see below).

1. The residual portion of available fund balance that is not otherwise restricted, committed or assigned and is above and beyond the Stabilization and Contingency Reserve target reserve balance.

b. In the case of the Proprietary Funds (Utility/Enterprise Fund) Generally Accepted Accounting Principles ("GAAP") does not permit the reporting of reserves on the face of the City financial statements. However, this does not preclude the City from setting policies to accumulate financial resources for prudent financial management of the City's proprietary fund operations. Since proprietary funds may include both long-term capital assets and long-term liabilities, the most comparable measure of liquid financial resources that is similar to fund balance in proprietary funds is net working capital which is the difference between current assets and current liabilities. The City's internal accounting software can track similar classifications as described in this policy but the City will report on the official financial statements according to GAAP.

III. Stabilization and Contingency Reserve

a. The City establishes a Stabilization and Contingency Reserve ("SCR") to mitigate various situations which may include but are not limited to the following:
   i. A catastrophic loss of critical infrastructure.
   ii. A state or federally declared state of emergency.
   iii. Any settlement arising from a claim or judgment.
   iv. Deviation from budgeted revenue projections.
   v. Any action by another government that eliminates or shifts revenues from the City.
   vi. Inability of the City to meet its debt service obligations in any given year.
   vii. A cash flow issue arising from the timing of receipt of certain revenues or payment of certain expenditures.
   viii. Other circumstances deemed necessary by City Council to meet the claims and obligations of the City.

b. General Fund Stabilization and Contingency Reserve – The SCR for the General Fund shall have a target balance of twenty-five percent (25%) of General Fund total operating and capital expenditures in the most recent fiscal budget approved by City Council (excluding one-time expenditures using available reserves or impact/capacity fees).

c. Street Fund Stabilization and Contingency Reserve - The SCR for the Street Fund shall have a target balance of twenty-five percent (25%) of Street Fund total operating and capital expenditures in the most recent fiscal budget approved by City Council (excluding one-time expenditures using available reserves or impact/capacity fees).

d. Utility Fund Stabilization and Contingency Reserve – The SCR for the Utility Fund shall have a target balance based upon the most recent rate study prepared and approved by City Council for each specific Utility (Electric, Water, and Wastewater/Water Resource Reclamation).
   i. In the event that a rate study does not specifically address a SCR (or for other departments in the Utility Fund that do not have a rate study) then the reserve shall have a balance of twenty-five (25%) of the Department's total operating and capital expenditures in the most recent fiscal budget approved by City Council

(excluding one-time expenditures using available reserves or impact/capacity fees).

e. In the event a Stabilization and Contingency Reserve is used, City Staff shall present a plan to City Council to replenish the reserve within three to five years. This excludes use of any SCR to support seasonal variations in cash flows.

RESOLUTION NO. _____

A RESOLUTION AUTHORIZING THE MAYOR AND CLERK AND APPROVING A FUND BALANCE AND RESERVE POLICY.

NOW, THEREFORE, BE IT RESOLVED BY THE CITY COUNCIL FOR THE CITY OF BENTONVILLE, ARKANSAS.

Section 1: That the Mayor and Clerk's Fund Balance and Reserve Policy is hereby approved, as set forth in the agreement attached hereto as Exhibit "A".

Section 2: This resolution shall be in full force and effect from and after the date of its passage.

PASSED and APPROVED this _____ day of _____, 2021.

APPROVED:

_____
MAYOR

ATTEST:

_____
CITY CLERK

Agenda Item Form

Date of City Council Meeting	**6/22/2021**
Department	**Finance/Accounting**
Submitted by	**Jake Harper**
Phone	**479-271-6781**

Item Type: (*Check Applicable Item Type*)					
☐ Budget Adjustment	☐ Change Order	☐ Informational	☐ Ordinance	☑ Resolution	☐ Bid Award

Recommendation/Suggested Action *(Enter recommendation in space below)*:

Resolution to approve a Cash Management and Investment Policy.

Estimated Cost	
Is this Item Budgeted?	☐ Yes ☐ No

If no, please explain how item will be funded *(briefly explain in space below)* **:**

CITY OF BENTONVILLE
Cash Management and Investment Policy

Adopted: XXXX, 2021

CASH MANAGEMENT & INVESTMENT POLICY

I. Purpose

The purpose of this policy is twofold:

1. To establish a framework from which the City may work to maintain effective cash management practices that are in compliance with federal, state and local requirements, City policy and industry standards. These cash management practices will ensure that:
   - Funds are deposited promptly in order for the City to have the ability to remit payment of bills and payroll in a timely manner.
   - Accurate accounting of cash inflows and outflows is maintained.
   - Idle cash is invested in order to maximize revenues.
   - The level of funds necessary to meet short-term needs is monitored.

2. To provide guidelines for the investment of City of Bentonville operating and capital improvement funds to preserve the safety of principal, to maintain adequate cash flow, and to maximize interest earnings.

II. Scope

This policy applies to all monies held by the City that are needed for the short-term payment of obligations and those invested for future needs. This policy does not apply to the investment of employee retirement or pension funds, escrow funds held by the City of Bentonville, or proceeds from the issuance of bonds.

The City may consolidate cash balances from all operating funds to maximize investment earnings and to increase efficiencies with regard to investment pricing, safekeeping, and administration. Investment income will be allocated to the various funds based on their respective participation and in accordance with generally accepted accounting principles.

Investment expenses will be deducted from investment earnings and be reported in the annual reports referenced in section VI.I.

III. Deposits

The City's Accounting Department personnel will ensure that all monies are deposited, properly accounted for and reconciled in a timely and accurate manner.

- All monies from the City's different departments are held in the City's main checking accounts unless otherwise directed by federal or state guidelines or as required for special projects. For financial reporting purposes, the monies are reported in the appropriate fund.

- All received monies are reported to the general ledger on a daily basis by fund, payment type and source.
- Monies required to be reimbursed to a payee (Ex: Occupancy Deposits) are appropriately reported in the City's financial statements.

- All City departments that have the ability to accept monies should do so in accordance with the City's cash handling procedures which is contained in the Appendix A of this Policy.
- All deposit discrepancies will be investigated.
- The City will ensure that proper segregation of duties exists and the same employee who accepts payments is not the same employee who completes the daily deposit or reconciles bank statements.

IV. Receivables

All amounts due to the City are reviewed on an ongoing basis by the Accounting Department and other City departments to ensure that:

- The City is collecting payments in a timely manner.
- Work is not being performed for individuals or businesses who have a history of past due accounts or bad debts with the City.

Methods to collect past due receivables and insufficient checks shall be explored by the City.

V. Disbursements

The City's Accounting Department personnel will ensure that all monies are expended in a timely and accurate manner and in accordance with federal, state and local law, city policy and industry standards.

- At a minimum, the City makes cash disbursements on a weekly basis. Cash disbursements may be made on a more frequent basis if deemed necessary. All cash disbursements must be approved by the Finance Director or designee before disbursement occurs.
  - Payroll disbursements are made bi-weekly.
- All disbursements made must be allowable and will be properly recorded by fund, department and account.
- Two (2) signatories are required on all checking accounts. These signatures are kept electronically in a secure location that is only accessible by authorized personnel.

- The City will ensure that proper segregation of duties exists and that the same employee who writes checks is not the same employee who signs checks or reconciles the bank statements.

- The City will make every effort to take advantage of all applicable discounts.

VI. Investments

A. Primary Objectives

The primary objectives, in priority order, of investment activities shall be safety, liquidity, and yield.

1. *Safety*
   Safety of principal is the foremost objective of the City of Bentonville's investment program. Investments shall be undertaken in a manner that seeks to ensure the preservation of capital in the overall portfolio. The objective will be to mitigate credit risk and interest rate risk.

2. *Liquidity*
   The City of Bentonville's investment portfolio shall remain sufficiently liquid to meet all operating requirements that may be reasonably anticipated. This is accomplished by structuring the portfolio so that securities mature concurrent with cash needs to meet anticipated demands. Furthermore, since all possible cash demands cannot be anticipated, the portfolio should consist largely of securities with active secondary or resale markets. A portion of the portfolio also may be placed in money market mutual funds or local government investment pools which offer same-day liquidity for short-term funds.

3. *Yield*
   The investment portfolio shall be designed with the objective of attaining a market rate of return throughout budgetary and economic cycles, taking into account the investment risk constraints and liquidity needs. Return on investment is of secondary importance compared to the safety and liquidity objectives described above. The core of investments is limited to relatively low risk securities in anticipation of earning a fair return relative to the risk being assumed. The City shall maximize interest yields while ensuring that the maturity dates coincide with projected expenditure requirements.

B. Governing Authority

The investment program shall be operated in conformance with the Arkansas State Statutes and the City Of Bentonville Code of Ordinances. The City of Bentonville Finance and Accounting Departments are responsible for investing the unexpended cash in the City Treasury.

The authority governing investments for municipal governments is set forth in Arkansas State Code Title 19, Chapter 1, Subchapter 5 – *Investment of Public Funds as amended by Act 619 of 2011*. Further provisions for cities with real property assessed valuation in excess of 300 million dollars is set forth in Arkansas State Statute §19-1-505. Investment of City funds will be made only in compliance with Arkansas statutes.

C. Standards of Care

1. *Prudence*
   The standard of prudence to be used by investment officials shall be the "prudent person" standard and shall be applied in the context of managing an overall portfolio. Investment officials (elected officials or City employees involved in the investment process) acting in accordance with written procedures, within this investment policy, and with due diligence shall be relieved of personal responsibility for an individual security's credit risk or market price changes.

   The "prudent person" standard states that, "Investments shall be made with judgement and care under circumstances then prevailing, which persons of prudence, discretion, and intelligence exercise in the management of their own affairs, not for speculation, but for investment, considering the probable safety of their capital as well as the probable income to be derived."

2. *Ethics and Conflicts of Interest*
   All City elected officials and City employees involved in the investment process shall refrain from personal business activities that could conflict with the proper execution and management of the investment program, or that could impair their ability to make impartial decisions. No elected official or City employee involved in the investment process shall have a direct or indirect financial interest with the broker or corporation with whom they are conducting business. Elected officials or City employees involved in the investment process shall disclose any personal financial interests that could be related to the performance of the City's investment portfolio. Elected officials or City employees involved in the investment process shall refrain from undertaking personal investment transactions with the same individual with whom business is conducted on behalf of the City of Bentonville.

D. Authorized Financial Institutions and Brokers/Dealers

The Finance and Accounting Departments are responsible for the City's banking relationships. Establishing new or closing bank accounts should only be done by the Accounting Department. Use of the City's Federal Employer Identification Number to open bank accounts for other than legal, authorized City business is prohibited.

Security transactions (excluding certificates of deposit or CDARS program, see F.3 below) on behalf of the City will be conducted only with financial institutions and brokers/dealers who have been approved by City Council. In addition, the financial institutions must be on the list of banks or banking institutions, maintained by the Arkansas Bank Commissioner,

that are eligible to hold public funds. (Arkansas Code Annotated § 19-8-107) Brokers/dealers must meet or exceed the capital adequacy standards set by the Federal Reserve Bank of New York, and may include dealers or regional dealers that qualify under Securities and Exchange Commission (SEC) Rule 15C3-1 (Uniform Net Capital Rule). In addition, the broker/dealer that conducts security transactions on behalf of the City and/or performs safekeeping duties related to those securities on behalf of the City shall:

- Have offices located in the State of Arkansas.
- Be registered with the Arkansas Securities Department.
- Be a member of Financial Industries Regulatory Agency (FINRA).
- Be a member of Securities Investor Protection Corporation (SIPC).

E. Safekeeping and Collateralization

1. *Records*
   Complete records of all investment transactions will be kept by the City of Bentonville for the amount of time required by State law.

2. *Delivery vs. Payment*
   All trades where applicable will be executed by delivery vs. payment (DVP) to ensure that securities are deposited in an eligible financial institution prior to the release of funds.

3. *Collateralization*
   Collateralization will be maintained as required by State law.

F. Authorized Investments

1. The City will invest only in book entry securities.

2. The City may invest in any instrument or security authorized for investment by Arkansas Code Annotated § 19-1-501, and further defined in § 19-1-505, or by the Local Government Joint Investment Trust Act, and Arkansas Code Annotated § 19-8-301 et seq., as they may from time to time be amended.

3. The City of Bentonville shall not invest in derivative products, common stocks, or long-term bonds used for speculation.

    a. The City can accept common stocks of publicly traded companies as donations.
        i. The City will not accept such stocks without approval from City Council.
        ii. The City will liquidate (sale) the stock as soon as reasonably possible after receipt of the stock. The City's intent is not to hold Stock but to liquidate it immediately after receipt.

iii. Any conditions of the stock donation will be approved by City Council.

G. Investment Parameters

1. *Diversification*
   The investments shall be diversified by:
   - Limiting investment concentrations in securities from a specific issuer or business sector (excluding U.S. Treasury securities),
   - Limiting investment in securities that have higher credit risks,
   - Investing in securities with varying maturities, and;
   - Continuously investing a portion of the portfolio in readily available funds such as money market funds to ensure the appropriate liquidity is maintained to meet ongoing obligations.

2. *Maximum Maturities*
   To the extent feasible, the City of Bentonville shall attempt to match its investments with anticipated cash flow requirements. The City anticipates a range of maturities from ninety (90) days to five (5) years, consistent with the investment objectives.

   Reserve funds, capital improvement funds and other funds with longer-term investment horizons may be invested in securities exceeding five (5) years if the maturities of such investments are made to coincide as nearly as practicable with the expected use of funds, or in securities with active secondary or resale markets.

3. *Competitive Quotes*
   The Finance Director or designee shall attempt to obtain competitive quotes from at least three financial institutions on all purchases of certificates of deposits (or CDARS) with financial institutions. These financial institutions must be permitted to work in the State of Arkansas and have offices located in Benton and Washington counties in Arkansas. The Finance Director and one other pre-established bank signor are allowed to establish Certificate of Deposit or CDARS accounts with the bank providing the most competitive product taking into account safety, liquidity and yield.

H. Internal Controls

The Finance Director or designee shall establish policies and procedures to provide reasonable assurance that the City's monies are protected from loss due to fraud or employee error. A review of internal controls and compliance with the policies and procedures of the City's Cash Management Policy will be conducted as part of the City's annual financial audit.

Any suspicion of fraud or non-compliance with internal control procedures will be reported to the Finance Director or Assistant Finance Director immediately for further investigation.

I. Monitoring and Reporting

Cash flow is monitored on an ongoing basis to ensure that liquid funds are available to meet upcoming payment obligations. Any idle cash is invested in accordance with the City's Investment Policy.

The City's various bank accounts are reconciled on a monthly basis by the Accounting Department but not by the same employees responsible for preparing the daily deposit or weekly check run.

The Finance Director or investment advisor shall prepare an investment report at least annually that provides an analysis of the status of the current investment portfolio. The report shall include the following:

- Listing of individual securities held at the end of the reporting period.
- Realized and unrealized gains or losses resulting from appreciation or depreciation.
- Listing of investment by maturity date.
- Percentage of the total portfolio which each type of investment represents.

J. Annual Review

This policy shall be reviewed annually by the Finance Director, other City employees and elected officials involved in the investment and cash management process. The policy is subject to any revisions needed to stay current with changes in laws, regulations or needs of the City. Any modifications made shall be approved by City Council.

Appendix A

CASH COLLECTION AND DEPOSIT PROCEDURES

I. Purpose

The purpose of this document is to provide City of Bentonville employees with standard guidelines for cash collection and deposit procedures. All cash handling processes shall be performed within the delegated scope of authority and in compliance with all federal, state and local laws, City policy and generally accepted accounting principles.

II. Scope

This document provides the framework for the handling of cash by all departments of the City of Bentonville. Departments may have requirements in Federal or State laws, grant awards or other mandates not covered in this policy. The Finance and Accounting Departments should be notified of any additional requirements. Each department is responsible for developing internal cash handling procedures based on this document and for training their personnel on these procedures.

III. Cash Collection and Receipt Processing

A. Safekeeping of Funds

i. To enhance the internal control over money, a segregation of duties within the department should be in place so that errors or irregularities are prevented or promptly detected. Where staffing levels do not permit separation of duties, other controls such as strict individual accountability, thorough management review and supervision shall exist. Department Managers should periodically examine, count or perform other reviews of cash funds.

ii. The number of employees with access to cash funds shall be limited to ensure internal control.

iii. Physical protection of funds through the use of bank facilities, safes and locked cash boxes or drawers shall be practiced at all times.

iv. All unattended cash must be secured and safeguarded in a locked and secure location.

v. Cash held on the premises shall be held at an absolute minimum to ensure safety and maximize return on investments.

vi. All cash should be maintained on City property unless it is being transported between the bank or City properties during the normal course of business.

B. Cashier Responsibility

i. It is the responsibility of the cashier to ensure Cash Receipt Batches and cash on hand equal at all times (excluding starting cash). If a cash drawer or Cash Receipt Batch is out of balance, an over/short transaction must be recorded in the City's accounting software. Employees are strictly prohibited from putting money in or taking money out of their drawer in order to make it balance.

ii. All Cash Receipt Batches and drawers are to be handled in a neat and professional manner (contact the Accounting Department for a list of suggested guidelines).

C. Receipt Processing

i. All payments received on obligations to the City must be recorded through a computerized accounting system with computer generated official city receipts or handwritten receipts that are pre-numbered to account for lapsed sequence. The customer must be encouraged to take a receipt for all transactions; a receipt must be generated whether or not a customer requests or takes a receipt. All numbered receipts must be accounted for, including the original of voided receipts.

ii. Regardless of when the deposit is taken to the Administrative Services Building, the recording of any transaction should happen at the time the transaction occurs.

D. Cash Receipts

i. Checks

1. All checks should be made payable to the City of Bentonville or a variation (Ex: Bentonville Water Department, Bentonville Police, etc…). Under no circumstances shall a check for the City be made payable to an individual and signed over to the City. An exception to this is a reimbursement check made payable to a City employee and owed to the City, for that particular reason the check can be signed over to the City.

2. All checks received shall be restrictively endorsed (stamped) immediately upon receipt or opening of mail.

3. Each check shall be inspected for the following:

   a. Current date (post or stale dated checks are not to be accepted).

   b. Proper signature.

   c. No alterations (unless allowed by current bank regulations). Allowed alterations must be initialed by issuing party.

   d. Bank name and routing number printed on check.

e. Legal line matches courtesy amount and is the amount to be credited (amount written in words matches the numerically written amount).

f. For temporary checks, the payer's name, address, phone number and State issued ID number are written on the check.

4. Check cashing is prohibited unless there is an emergency circumstance. The Accounting Department must approve any check cashing and the check has to be issued by the City of Bentonville in a situation where cash is needed immediately for official City business.

ii. Credit Cards

1. All credit card transactions must be recorded the same day the transaction takes place in the City's accounting software or 3rd Party Software.

2. If an error occurs in the credit card company's software during processing, the customer's account will be credited in a timely manner from when the error is identified.

3. A customer's credit card information should be collected in a Payment Card Industry (PCI) compliant manner.

a. Credit card information must be treated as confidential and can only be taken in person, by phone or through an online payment portal. Accepting credit card information via email is not allowed.

iii. Cash back will not be provided for a check or credit card transaction.

E. Cash Receipt Batches delivered to Administrative Services

i. Departments must drop off all Cash Receipt Batches at the Utility Billing Department. The batches shall be given directly to a member of Utility Billing to be placed in their safe.

ii. Cash Receipt Batches must be dropped off the day after original receipt (excluding weekends) unless exempted below.

1. *Exemptions:*

a. Deposits shall be made within twenty-four (24) hours of receipt. Departments, in conjunction with the Accounting Department shall assess the reasonableness, practicality, and security in determining the timing for deposits, especially when deposits exceed the twenty-four (24) hour time requirement noted above. Careful consideration

shall be given to the risk involved in holding idle cash and/or cash equivalents in the department versus the cost of making more frequent deposits. Requests for waivers of the requirement for deposits to be made within twenty-four (24) hours of receipt shall be submitted to the Accounting Department for consideration by the Assistant Finance Director or designee.

b. Cash maintained in various vending type machines maintained at City facilities (batch must be brought up when the machine is serviced/Par Out).

c. A deposit that requires special processing due to additional requirements and cannot be completed the day of receipt. In this case, the deposit should be brought up when the additional requirements are met.

F. 3rd Party Software (Software other than the City's accounting software)

i. If 3rd Party Software is being utilized as the initial point of sale system, a report must be provided from the 3rd Party Software that shows the amount receipted in. This amount must equal the amount entered into the City's accounting software.

ii. If a 3rd Party Software is being utilized, all daily receipts (if done by multiple cashiers) shall be combined and balanced before being entered into the City's accounting software as one batch.

IV. Deposit Processing

It is the responsibility of the Accounting Department to balance all cash receipts daily to the City's accounting software and supporting documentation (daily deposit slips, 3rd Party reports, system receipts and reports) and resolve all discrepancies.

The standard for depositing cash and checks in the bank shall be within 24 hours (excluding weekends) of receipt of those funds by the Accounting Department (unless staffing levels require a temporary exception). All deposits not made daily shall be held in a secure location such as a safe.

Copies and receipts provided by the bank shall be maintained with the corresponding day's system cash reports and department provided support.

V. Refunds

All customer refunds should either be processed by check through the Accounting Department or via credit card. Cash refunds are not allowed.

i. If the original payment was made by cash or check, refunds must be made in the form of a check issued by the Accounting Department. The Accounts Payable staff processes these as a Request for Check and are subject to Department Head approval. All refund requests must be accompanied by proof of payment (receipt), the date paid, amount paid and purpose of payment.

ii. Credit card refunds are only for refunding payments originally made by credit card and must be refunded to the same credit card number used to make the initial payment. Credit card refunds may be processed by check if needed.

VI. Petty Cash

Petty cash funds held by the City departments should be properly secured at all times. Access to these funds should be restricted to specified personnel that are responsible for the funds.

Cash on hand and receipts for disbursements made should always equal the assigned amount of the petty cash fund. A member of staff within the respective department should reconcile petty cash monthly. When the person performing the reconciliation is also the person that maintains the funds, another staff member should review the reconciliation. Reimbursement of the petty cash funds should be submitted to the Accounting department at least annually prior to the end of the year.

On an annual basis, Accounting will perform an audit of City-wide petty cash.

VII. Internal Control

Strong internal controls for cash collection are necessary to prevent mishandling of City funds and are designed to safeguard and protect employees from inappropriate charges of mishandling funds by defining their responsibilities in the cash handling process.

Violation of this policy could result in discipline, up to and including termination. Any violation of the policy amounting to theft will be referred for prosecution.

VIII. Definitions

- *Cash Receipt Batch* – the accumulation of a day's work including all currency, checks, money orders, negotiable instruments and charge card transactions that has been entered and reconciled with the City's accounting software.

- *Receipt* – paper or electronic record of a financial transaction.

RESOLUTION NO. _____

A RESOLUTION AUTHORIZING THE MAYOR AND CLERK AND APPROVING A CASH MANAGEMENT AND INVESTMENT POLICY.

NOW, THEREFORE, BE IT RESOLVED BY THE CITY COUNCIL FOR THE CITY OF BENTONVILLE, ARKANSAS.

Section 1: That the Mayor and Clerk's Cash Management and Investment Policy is hereby approved, as set forth in the agreement attached hereto as Exhibit "A".

Section 2: This resolution shall be in full force and effect from and after the date of its passage.

PASSED and APPROVED this _____ day of _____, 2021.

APPROVED:

_____
MAYOR

ATTEST:

_____
CITY CLERK

Agenda Item Form

Date of City Council Meeting	**6/22/2021**
Department	**Finance/Accounting**
Submitted by	**Jake Harper**
Phone	**479-271-6781**

Item Type: (*Check Applicable Item Type*)					
☐ Budget Adjustment	☐ Change Order	☐ Informational	☑ Ordinance	☐ Resolution	☐ Bid Award

Recommendation/Suggested Action *(Enter recommendation in space below):*

Approve an ordinance authorizing the issuance of sales and use tax bonds for the purpose of financing and refinancing the cost of capital improvements; pledging a 1% sales and use tax to pay the principal of and interest on the bonds; prescribing other matters relating thereto; and declaring an emergency.

Estimated Cost	
Is this Item Budgeted?	☐ Yes ☐ No

If no, please explain how item will be funded *(briefly explain in space below)* **:**

ORDINANCE NO. _____

AN ORDINANCE AUTHORIZING THE ISSUANCE OF SALES AND USE TAX BONDS FOR THE PURPOSE OF FINANCING AND REFINANCING THE COST OF CAPITAL IMPROVEMENTS; PLEDGING A 1% SALES AND USE TAX TO PAY THE PRINCIPAL OF AND INTEREST ON THE BONDS; PRESCRIBING OTHER MATTERS RELATING THERETO; AND DECLARING AN EMERGENCY.

WHEREAS, there was submitted to the qualified electors of the City of Bentonville, Arkansas (the "City") the questions of issuing, under Amendment No. 62 to the Constitution of the State of Arkansas (the "State") and under Title 14, Chapter 164, Subchapter 3 of the Arkansas Code of 1987 Annotated (the "Authorizing Legislation"), capital improvement bonds in the maximum aggregate principal amount of $23,000,000 for the purpose of refunding the City's outstanding Sales and Use Tax Bonds, Series 2009, Series 2010 and Series 2017 (collectively, the "Bonds Refunded"); capital improvement bonds in the maximum aggregate principal amount of $173,500,000 for the purpose of financing all or a portion of the costs of new, and improvements to existing, streets, roads and bridges including any curb, gutter, drainage, flood control and related improvements, equipment and land acquisition to accomplish such improvements, and street lighting, utility adjustments, sidepaths and traffic signals related thereto (the "Street Improvements"); capital improvement bonds in the maximum aggregate principal amount $32,750,000 for the purpose of financing all or a portion of the costs of new, and improvements to existing, park and recreational facilities and improvements and any necessary land acquisition, equipment and parking, drainage, flood control, road, trail, lighting and utility improvements therefor (the "Park and Recreational Improvements"); capital improvement bonds in the maximum aggregate principal amount $3,900,000 for the purpose of financing all or a portion of the costs of equipment, apparatus and new, or improvements to existing, facilities for the fire department, including particularly, without limitation, fire safety training facilities, including any necessary land acquisition, parking and utilities therefor (the "Fire Department Improvements"); capital improvement bonds in the maximum aggregate principal amount of $1,650,000 for the purpose of financing all or a portion of the costs of equipment, apparatus and new, or improvements to existing, facilities for the police department, including particularly, without limitation, police safety training facilities, and any necessary land acquisition, parking and utilities therefor (the "Police Department Improvements"); capital improvement bonds in the maximum aggregate principal amount of $6,600,000 for the purpose of financing all or a portion of the costs of radio communication equipment, facilities and apparatus (the "Radio Communication Improvements"); capital improvement bonds in the maximum aggregate principal amount of $19,750,000 for the purpose of financing all or a portion of the costs facilities for drainage and flood control and any necessary land and easement acquisition therefor (the "Drainage Improvements"); and capital improvement bonds in the maximum aggregate principal amount of $4,975,000 for the purpose of financing all or a portion of the costs the expansion of and improvements to the Bentonville Public Library, including any necessary land acquisition, equipment, utility adjustments and parking improvements therefor (the "Library Improvements"); and

WHEREAS, at the special election held April 13, 2021, a majority of the electors voting on the questions approved the issuance of such bonds; and

WHEREAS, the City Council is prepared to issue capital improvement bonds designated as "City of Bentonville, Arkansas Sales and Use Tax Refunding and Improvement Bonds, Refunding Taxable Series 2021A" (the "Series 2021A Bonds") in the aggregate principal amount of $_____ for the purpose of refunding the Bonds Refunded designated "Series 2017" (the "Bonds Advance Refunded") and accomplishing a portion of the Street Improvements (the "2021A Improvements"); and

WHEREAS, the City Council is prepared to issue capital improvement bonds designated as "City of Bentonville, Arkansas Sales and Use Tax Refunding and Improvement Bonds, Series 2021B" (the "Series 2021B Bonds") in the aggregate principal amount of $_____ for the purpose of refunding the Bonds Refunded designated "Series 2009" and "Series 2010" (the "Bonds Current Refunded") and accomplishing the Radio Communication Improvements, the Fire Department Improvements and the Police Department Improvements and a portion of the Street Improvements, the Drainage Improvements, the Library Improvements and the Park and Recreational Improvements (collectively, the "2021B Improvements"); and

WHEREAS, through the assistance of Stephens Inc., as financial advisor for the City, the City has made arrangements for the sale of (a) the Series 2021A Bonds to Crews & Associates, Inc. and Raymond James & Associates, Inc. (collectively, the "Purchaser") at a price of $_____ (principal amount less underwriters' discount of $_____) (the "2021A Purchase Price") and (b) the Series 2021B Bonds to the Purchaser at a price of $_____ (principal amount plus net original issue premium of $_____ and less $_____ of underwriters' discount) (the "2021B Purchase Price"), pursuant to a Bond Purchase Agreement between the Purchaser and the City (the "Purchase Agreement"), which has been presented to and is before this meeting; and

WHEREAS, the Preliminary Official Statement, dated _____, 2021, offering the Series 2021A Bonds and the Series 2021B Bonds (collectively, the "2021 Bonds") for sale (the "Preliminary Official Statement"), has been presented to and is before this meeting; and

WHEREAS, the Continuing Disclosure Agreement between the City and Simmons Bank, Pine Bluff, Arkansas (the "Disclosure Agreement"), providing for the disclosure obligations of the City with respect to the 2021 Bonds, has been presented to and is before this meeting; and

WHEREAS, the principal amount of the 2021 Bonds plus any net original issue premium received from the sale of the 2021 Bonds are allocated among the purposes as set forth in Section 25 hereof; and

WHEREAS, the 2021 Bonds and any Additional Parity Bonds issued pursuant to Section 10 of this Ordinance are hereinafter collectively referred to as the "bonds;"

NOW, THEREFORE, BE IT ORDAINED by the City Council of the City of Bentonville, Arkansas:

Section 1. The offer of the Purchaser for the purchase of (a) the Series 2021A Bonds from the City at the 2021A Purchase Price and (b) the Series 2021B Bonds from the City at the 2021B Purchase Price, subject to the terms and provisions hereafter in this Ordinance set forth in detail is hereby accepted and the Purchase Agreement, in substantially the form submitted to this meeting, is approved and the 2021 Bonds are hereby sold to the Purchaser. The Mayor is hereby authorized and directed to execute and deliver the Purchase Agreement on behalf of the City and to take all action required on the part of the City to fulfill its obligations under the Purchase Agreement.

Section 2. The Preliminary Official Statement is hereby approved and the previous use of the Preliminary Official Statement by the Purchaser in connection with the sale of the 2021 Bonds is hereby in all respects approved and confirmed, and the Mayor is hereby authorized and directed, for and on behalf of the City, to execute the Preliminary Official Statement and the final Official Statement in the name of the City for use in connection with the sale of the 2021 Bonds as set forth in the Purchase Agreement.

Section 3. Under the authority of the Constitution and laws of the State, including particularly Amendment No. 62 to the Constitution of the State and the Authorizing Legislation, (a) the Series 2021A Bonds are hereby authorized and ordered issued in the total principal amount of $_____ for the purpose of financing all or a portion of the costs of accomplishing the refunding of the Bonds Advance Refunded and the 2021A Improvements, paying expenses of issuing the Series 2021A Bonds and funding a portion of a debt service reserve and (b) the Series 2021B Bonds are hereby authorized and ordered issued in the total principal amount of $_____ for the purpose of financing all or a portion of the costs of accomplishing the refunding of the Bonds Current Refunded and the 2021B Improvements, paying expenses of issuing the Series 2021B Bonds and funding a portion of a debt service reserve.

The 2021 Bonds shall bear interest at the rates and shall mature on November 1 in the amounts and in the years as follows:

SERIES 2021A BONDS

Year (November 1)	Amount	Interest Rate

SERIES 2021B BONDS

Year (November 1)	Amount	Interest Rate

The 2021 Bonds shall be issuable only as fully registered bonds without coupons in the denomination of $5,000 or any integral multiple thereof. Unless the City shall otherwise direct, the 2021 Bonds of each series shall be numbered from 1 upward in order of issuance. Each 2021 Bond shall have a CUSIP number but the failure of a CUSIP number to appear on any 2021 Bond shall not affect its validity.

The 2021 Bonds shall be registered initially in the name of Cede & Co., as nominee for the Depository Trust Company ("DTC"), which shall be considered to be the registered owner of the 2021 Bonds for all purposes under this Ordinance, including, without limitation, payment by the City of principal of, redemption price, premium, if any, and interest on the 2021 Bonds, and receipt of notices and exercise of rights of registered owners. There shall be one certificated, typewritten 2021 Bond for each stated maturity date and interest rate, as applicable, of each series which shall be immobilized in the custody of or on behalf of DTC with the beneficial owners having no right

to receive the 2021 Bonds in the form of physical securities or certificates. DTC and its participants shall be responsible for maintenance of records of the ownership of beneficial interests in the 2021 Bonds by book-entry on the system maintained and operated by DTC and its participants, and transfers of ownership of beneficial interests shall be made only by DTC and its participants, by book-entry, the City having no responsibility therefor. DTC is expected to maintain records of the positions of participants in the 2021 Bonds, and the participants and persons acting through participants are expected to maintain records of the purchasers of beneficial interests in the 2021 Bonds. The 2021 Bonds as such shall not be transferable or exchangeable, except for transfer to another securities depository or to another nominee of a securities depository, without further action by the City.

If any securities depository determines not to continue to act as a securities depository for the 2021 Bonds for use in a book-entry system, the City may establish a securities depository/book-entry system relationship with another securities depository. If the City does not or is unable to do so, or upon request of the beneficial owners of all outstanding 2021 Bonds, the City and the Trustee (hereinafter identified), after the Trustee has made provision for notification of the beneficial owners by the then securities depository, shall permit withdrawal of the 2021 Bonds from the securities depository, and authenticate and deliver 2021 Bond certificates in fully registered form (in denominations of $5,000 or integral multiples thereof) to the assigns of the securities depository or its nominee, all at the cost and expense (including costs of printing definitive 2021 Bonds) of the City, if the City fails to maintain a securities depository/book-entry system, or of the beneficial owners, if they request termination of the system.

Prior to issuance of the 2021 Bonds, the City shall have executed and delivered to DTC a written agreement (the "Representation Letter") setting forth (or incorporating therein by reference) certain undertakings and responsibilities of the City with respect to the 2021 Bonds so long as the 2021 Bonds or a portion thereof are registered in the name of Cede & Co. (or a substitute nominee) and held by DTC. Notwithstanding such execution and delivery of the Representation Letter, the terms thereof shall not in any way limit the provisions of this Section or in any other way impose upon the City any obligation whatsoever with respect to persons having interests in the 2021 Bonds other than the registered owners, as shown on the registration books kept by the Trustee. The Trustee shall take all action necessary for all representations of the City in the Representation Letter with respect to the Trustee to at all times be complied with.

The authorized officers of the Trustee and the City shall do or perform such acts and execute all such certificates, documents and other instruments as they or any of them deem necessary or advisable to facilitate the efficient use of a securities depository for all or any portion of the 2021 Bonds; provided that neither the Trustee nor the City may assume any obligations to such securities depository or beneficial owners of 2021 Bonds that are inconsistent with their obligations to any registered owner under this Ordinance.

Each 2021 Bond shall be dated as of its date of delivery to the Purchaser. Interest on the 2021 Bonds shall be payable on May 1, 2022, and semiannually thereafter on May 1 and November 1 of each year. Payment of each installment of interest shall be made to the person in whose name the bond is registered on the registration books of the City maintained by Simmons Bank, Pine Bluff, Arkansas, as Trustee and Paying Agent (the "Trustee"), at the close of business on the

fifteenth day of the month (whether or not a business day) next preceding each interest payment date (the "Record Date"), irrespective of any transfer or exchange of any such 2021 Bond subsequent to such Record Date and prior to such interest payment date, by check or draft mailed by the Trustee to such owner at his address on such registration books. Principal of the 2021 Bonds shall be payable at the corporate trust office of the Trustee.

Each 2021 Bond shall bear interest from the payment date next preceding the date on which it is authenticated unless it is authenticated on an interest payment date, in which event it shall bear interest from such date, or unless it is authenticated prior to the first interest payment date, in which event it shall bear interest from its dated date, or unless it is authenticated during the period from the Record Date to the next interest payment date, in which case it shall bear interest from such interest payment date, or unless at the time of authentication thereof interest is in default thereon, in which event it shall bear interest from the date to which interest has been paid.

Only such 2021 Bonds as shall have endorsed thereon a Certificate of Authentication substantially in the forms set forth in Section 5 hereof (the "Certificate") duly executed by the Trustee shall be entitled to any right or benefit under this Ordinance. No 2021 Bond shall be valid and obligatory for any purpose unless and until the Certificate shall have been duly executed by the Trustee, and the Certificate of the Trustee upon any such 2021 Bond shall be conclusive evidence that such 2021 Bond has been authenticated and delivered under this Ordinance. The Certificate on any 2021 Bond shall be deemed to have been executed if signed by an authorized officer of the Trustee, but it shall not be necessary that the same officer sign the Certificate on all of the 2021 Bonds.

In case any bond shall become mutilated or be destroyed or lost, the City shall, if not then prohibited by law, cause to be executed and the Trustee may authenticate and deliver a new bond of like date, maturity, interest rate and tenor in exchange and substitution for and upon cancellation of such mutilated bond, or in lieu of and in substitution for such bond destroyed or lost, upon the owner paying the reasonable expenses and charges of the City and Trustee in connection therewith, and, in the case of a bond destroyed or lost, his filing with the Trustee evidence satisfactory to it that such bond was destroyed or lost, and of his ownership thereof, and furnishing the City and Trustee with indemnity satisfactory to them. The Trustee is hereby authorized to authenticate any such new bond. In the event any such bond shall have matured, instead of issuing a new bond, the City may pay the same without the surrender thereof. Upon the issuance of a new bond under this Section, the City may require the payment of a sum sufficient to cover any tax or other governmental charge that may be imposed in relation thereto and any other expenses (including the fees and expenses of the Trustee) connected therewith.

The City shall cause books to be maintained for the registration and for the transfer of the bonds as provided herein and in the bonds. The Trustee shall act as the bond registrar. Each bond is transferable by the registered owner thereof or by his attorney duly authorized in writing at the principal office of the Trustee. Upon such transfer a new fully registered bond or bonds of the same maturity, interest rate and series, of authorized denomination or denominations, for the same aggregate principal amount will be issued to the transferee in exchange therefor.

Bonds may be exchanged at the principal corporate trust office of the Trustee for an equal aggregate principal amount of bonds of any other authorized denomination or denominations. The City shall execute and the Trustee shall authenticate and deliver bonds which the registered owner making the exchange is entitled to receive.

No charge shall be made to any owner of any bond for the privilege of transfer or exchange, but any owner of any bond requesting any such transfer or exchange shall pay any tax or other governmental charge required to be paid with respect thereto. Except as otherwise provided in the immediately preceding sentence, the cost of preparing each new bond upon each exchange or transfer and any other expenses of the City or the Trustee incurred in connection therewith shall be paid by the City. Neither the Trustee nor the City shall be required to transfer or exchange any bonds selected for redemption in whole or in part.

The person in whose name any bond shall be registered shall be deemed and regarded as the absolute owner thereof for all purposes, and payment of or on account of the principal or premium, if any, or interest on any bond shall be made only to or upon the order of the registered owner thereof or his legal representative, but such registration may be changed as hereinabove provided. All such payments shall be valid and effectual to satisfy and discharge the liability upon such bond to the extent of the sum or sums so paid.

In any case where the date of maturity of interest on or principal of the bonds or the date fixed for redemption of any bonds shall be a Saturday or Sunday or shall be in the State a legal holiday or a day on which banking institutions are authorized by law to close, then payment of interest or principal need not be made on such date but may be made on the next succeeding business day with the same force and effect as if made on the date of maturity or the date fixed for redemption, and no interest shall accrue for the period after the date of maturity or date fixed for redemption.

Section 4. The bonds shall be executed on behalf of the City by the manual or facsimile signatures of the Mayor and City Clerk and shall have impressed or imprinted thereon the seal of the City.

Section 5. The 2021 Bonds and the Certificate shall be in substantially the following forms and the Mayor and City Clerk are hereby expressly authorized and directed to make all recitals contained therein:

(Form of Series 2021A Bond)

REGISTERED REGISTERED

No.____ $_____

UNITED STATES OF AMERICA
STATE OF ARKANSAS
COUNTY OF BENTON
CITY OF BENTONVILLE
SALES AND USE TAX
REFUNDING AND IMPROVEMENT BOND
TAXABLE SERIES 2021A

Interest Rate: _____% Maturity Date: November 1, ____
Dated Date: _____, 2021
Registered Owner: Cede & Co.
Principal Amount: _____ Dollars
CUSIP No.: _____

KNOW ALL MEN BY THESE PRESENTS:

That the City of Bentonville, County of Benton, State of Arkansas (the "City"), for value received, hereby promises to pay to the Registered Owner shown above upon the presentation and surrender hereof at the principal corporate trust office of Simmons Bank, Pine Bluff, Arkansas, or its successor or successors, as Trustee and Paying Agent (the "Trustee"), on the Maturity Date shown above, the Principal Amount shown above, in such coin or currency of the United States of America as at the time of payment shall be legal tender for the payment of public and private debts and to pay by check or draft to the Registered Owner shown above interest thereon, in like coin or currency from the interest commencement date described below at the Interest Rate per annum shown above, payable on May 1, 2022 and on each May 1 and November 1 thereafter, until payment of such Principal Amount or, if this bond or a portion hereof shall be duly called for redemption, until the date fixed for redemption, and to pay interest on overdue principal and interest (to the extent legally enforceable) at the rate borne by this bond. Payment of each installment of interest shall be made to the person in whose name this bond is registered on the registration books of the City maintained by the Trustee at the close of business on the fifteenth day of the month (whether or not a business day) next preceding each interest payment date (the "Record Date"), irrespective of any transfer or exchange of this bond subsequent to such Record Date and prior to such interest payment date.

Unless this bond is presented by an authorized representative of The Depository Trust Company, a New York corporation ("DTC"), to the Trustee for registration of transfer, exchange or payment, and any certificate issued is registered in the name of Cede & Co. or in such other name as is requested by an authorized representative of DTC (and any payment is made to Cede & Co. or to such other entity as is required by an authorized representative of DTC), ANY TRANSFER, PLEDGE OR OTHER USE HEREOF FOR VALUE OR OTHERWISE BY OR TO

ANY PERSON IS WRONGFUL inasmuch as the registered owner hereof, Cede & Co., has an interest herein.

This bond shall bear interest from the payment date next preceding the date on which it is authenticated unless it is authenticated on an interest payment date, in which event it shall bear interest from such date, or unless it is authenticated during the period from the Record Date to the next interest payment date, in which case it shall bear interest from such interest payment date, or unless it is authenticated prior to the first interest payment date, in which event it shall bear interest from the Dated Date shown above, or unless at the time of authentication hereof interest is in default hereon, in which event it shall bear interest from the date to which interest has been paid.

This bond is one of an issue of City of Bentonville, Arkansas Sales and Use Tax Refunding and Improvement Bonds, Taxable Series 2021A, aggregating _____ Dollars ($_____) in aggregate principal amount (the "Series 2021A Bonds"), and is issued for the purpose of refunding the City's outstanding Sales and Use Bonds, Series 2017, financing a portion of the costs of street improvements, paying expenses related thereto and of authorizing and issuing the Series 2021A Bonds, and funding a portion of a debt service reserve. The City is also issuing its Sales and Use Tax Refunding and Improvement Bonds, Series 2021B (the "Series 2021B Bonds") and the Series 2021A Bonds and the Series 2021B Bonds (collectively, the "bonds") are equally and ratably secured.

The bonds are issued pursuant to and in full compliance with the Constitution and laws of the State of Arkansas (the "State"), particularly Amendment No. 62 to the Constitution of the State and Title 14, Chapter 164, Subchapter 3 of the Arkansas Code of 1987 Annotated (the "Authorizing Legislation"), and pursuant to Ordinance No. _____ of the City duly adopted on _____, 2021 (the "Authorizing Ordinance"), and an election duly held at which the majority of the legal voters of the City voting on the questions approved the issuance of the bonds. Reference is hereby made to the Authorizing Ordinance for the details of the nature and extent of the security and of the rights and obligations of the City, the Trustee and the registered owners of the bonds. The bonds are special obligations of the City, payable from the proceeds derived by the City from a 1% sales and use tax (the "Tax") levied by the City under Title 26, Chapter 75, Subchapter 2 of the Arkansas Code of 1987 Annotated and Ordinance No. 2003-108 of the City duly adopted on June 24, 2003, as amended by Ordinance No. 2021-47 of the City duly adopted on February 9, 2021, and the City hereby pledges its collections of the Tax received after the bonds are issued (the "Pledged Revenues") for the payment of this bond. The City has reserved the right in the Authorizing Ordinance to issue additional bonds under the Authorizing Ordinance on a parity of security with the bonds (the "Additional Parity Bonds").

The Series 2021A Bonds are not subject to redemption prior to maturity.

This bond is transferable by the Registered Owner shown above in person or by his attorney-in-fact duly authorized in writing at the principal corporate trust office of the Trustee, but only in the manner, subject to the limitations and upon payment of the charges provided in the Authorizing Ordinance, and upon surrender and cancellation of this bond. Upon such transfer a new fully registered bond or bonds of the same maturity, interest rate and series, of authorized denomination or denominations, for the same aggregate principal amount, will be issued to the

transferee in exchange therefor. This bond is issued with the intent that the laws of the State shall govern its construction.

The City and the Trustee may deem and treat the Registered Owner shown above as the absolute owner hereof for the purpose of receiving payment of or on account of principal hereof and interest due hereon and for all other purposes, and neither the City nor the Trustee shall be affected by any notice to the contrary.

The bonds are issuable only as fully registered bonds in the denomination of $5,000, and any integral multiple thereof. Subject to the limitations and upon payment of the charges provided in the Authorizing Ordinance, fully registered bonds may be exchanged for a like aggregate principal amount of fully registered bonds of the same maturity, interest rate and series of other authorized denominations.

This bond shall not be valid until it shall have been authenticated by the Certificate hereon duly signed by the Trustee.

IT IS HEREBY CERTIFIED, RECITED AND DECLARED that all acts, conditions and things required to exist, happen and be performed, under the Constitution and laws of the State, particularly Amendment No. 62 to the Constitution of the State and the Authorizing Legislation, precedent to and in the issuance of this bond have existed, have happened and have been performed in due time, form and manner as required by law; that the indebtedness represented by this bond and the issue of which it forms a part does not exceed any constitutional or statutory limitation; and that a tax sufficient to pay the bonds and interest thereon has been duly pledged in accordance with the Authorizing Legislation and made payable until all of the bonds and interest thereon have been fully paid and discharged.

IN WITNESS WHEREOF, the City of Bentonville, Arkansas has caused this bond to be executed by its Mayor and City Clerk and its corporate seal to be impressed or imprinted on this bond, all as of the Dated Date shown above.

ATTEST:	CITY OF BENTONVILLE, ARKANSAS
_____	_____
City Clerk	Mayor

(SEAL)

(Form of Trustee's Certificate)

TRUSTEE'S CERTIFICATE OF AUTHENTICATION

This bond is one of the Series 2021A Bonds issued under the provisions of the within mentioned Authorizing Ordinance.

Date of Authentication: _____.

SIMMONS BANK
Pine Bluff, Arkansas
TRUSTEE

By _____
Authorized Signature

(A form of assignment shall be attached to each Series 2021A Bond.)

(Form of Series 2021B Bond)

REGISTERED REGISTERED

No.____ $_____

UNITED STATES OF AMERICA
STATE OF ARKANSAS
COUNTY OF BENTON
CITY OF BENTONVILLE
SALES AND USE TAX
REFUNDING AND IMPROVEMENT BOND
SERIES 2021B

Interest Rate: _____% Maturity Date: November 1, ____
Dated Date: _____, 2021
Registered Owner: Cede & Co.
Principal Amount: _____ Dollars
CUSIP No.: _____

KNOW ALL MEN BY THESE PRESENTS:

That the City of Bentonville, County of Benton, State of Arkansas (the "City"), for value received, hereby promises to pay to the Registered Owner shown above upon the presentation and surrender hereof at the principal corporate trust office of Simmons Bank, Pine Bluff, Arkansas, or its successor or successors, as Trustee and Paying Agent (the "Trustee"), on the Maturity Date shown above, the Principal Amount shown above, in such coin or currency of the United States of America as at the time of payment shall be legal tender for the payment of public and private debts and to pay by check or draft to the Registered Owner shown above interest thereon, in like coin or currency from the interest commencement date described below at the Interest Rate per annum shown above, payable on May 1, 2022 and on each May 1 and November 1 thereafter, until payment of such Principal Amount or, if this bond or a portion hereof shall be duly called for redemption, until the date fixed for redemption, and to pay interest on overdue principal and interest (to the extent legally enforceable) at the rate borne by this bond. Payment of each installment of interest shall be made to the person in whose name this bond is registered on the registration books of the City maintained by the Trustee at the close of business on the fifteenth day of the month (whether or not a business day) next preceding each interest payment date (the "Record Date"), irrespective of any transfer or exchange of this bond subsequent to such Record Date and prior to such interest payment date.

Unless this bond is presented by an authorized representative of The Depository Trust Company, a New York corporation ("DTC"), to the Trustee for registration of transfer, exchange or payment, and any certificate issued is registered in the name of Cede & Co. or in such other name as is requested by an authorized representative of DTC (and any payment is made to Cede & Co. or to such other entity as is required by an authorized representative of DTC), ANY TRANSFER, PLEDGE OR OTHER USE HEREOF FOR VALUE OR OTHERWISE BY OR TO

ANY PERSON IS WRONGFUL inasmuch as the registered owner hereof, Cede & Co., has an interest herein.

This bond shall bear interest from the payment date next preceding the date on which it is authenticated unless it is authenticated on an interest payment date, in which event it shall bear interest from such date, or unless it is authenticated during the period from the Record Date to the next interest payment date, in which case it shall bear interest from such interest payment date, or unless it is authenticated prior to the first interest payment date, in which event it shall bear interest from the Dated Date shown above, or unless at the time of authentication hereof interest is in default hereon, in which event it shall bear interest from the date to which interest has been paid.

This bond is one of an issue of City of Bentonville, Arkansas Sales and Use Tax Refunding and Improvement Bonds, Series 2021B, aggregating _____ Dollars ($_____) in aggregate principal amount (the "Series 2021B Bonds"), and is issued for the purpose of refunding the City's outstanding Sales and Use Tax Bonds, Series 2009 and Series 2010, financing all or a portion of the costs of street improvements, park and recreational improvements, fire department improvements, police department improvements, drainage improvements, library improvements and radio communication improvements, paying expenses related thereto and of authorizing and issuing the Series 2021B Bonds, and funding a portion of a debt service reserve. The City is also issuing its Sales and Use Tax Refunding and Improvement Bonds, Taxable Series 2021A (the "Series 2021A Bonds") and the Series 2021A Bonds and the Series 2021B Bonds (collectively, the "bonds") are equally and ratably secured.

The bonds are issued pursuant to and in full compliance with the Constitution and laws of the State of Arkansas (the "State"), particularly Amendment No. 62 to the Constitution of the State and Title 14, Chapter 164, Subchapter 3 of the Arkansas Code of 1987 Annotated (the "Authorizing Legislation"), and pursuant to Ordinance No. _____ of the City duly adopted on _____, 2021 (the "Authorizing Ordinance"), and an election duly held at which the majority of the legal voters of the City voting on the questions approved the issuance of the bonds. Reference is hereby made to the Authorizing Ordinance for the details of the nature and extent of the security and of the rights and obligations of the City, the Trustee and the registered owners of the bonds. The bonds are special obligations of the City, payable from the proceeds derived by the City from a 1% sales and use tax (the "Tax") levied by the City under Title 26, Chapter 75, Subchapter 2 of the Arkansas Code of 1987 Annotated and Ordinance No. 2003-108 of the City duly adopted on June 24, 2003, as amended by Ordinance No. 2021-47 of the City duly adopted on February 9, 2021, and the City hereby pledges its collections of the Tax received after the bonds are issued (the "Pledged Revenues") for the payment of this bond. The City has reserved the right in the Authorizing Ordinance to issue additional bonds under the Authorizing Ordinance on a parity of security with the bonds (the "Additional Parity Bonds").

The Series 2021B Bonds are subject to extraordinary, optional and mandatory sinking fund redemption prior to maturity as follows:

(1) The Series 2021B Bonds shall be redeemed by the City from proceeds of the Series 2021B Bonds not needed for the purposes intended and Surplus Pledged Revenues (defined below), in whole at any time or in part on any interest payment date, at a redemption price equal to the principal amount being redeemed plus accrued interest to the redemption date, in inverse order of maturity (and by lot within a maturity in such manner as the Trustee shall determine).

The City has covenanted in the Authorizing Ordinance that Surplus Pledged Revenues, being 80% of the Pledged Revenues less the amount necessary to (1) insure the prompt payment of the principal of, interest on and Trustee's fees and expenses and administrative charges in connection with the bonds and the Additional Parity Bonds as the same become due, (2) maintain the debt service reserve in the required amount, and (3) pay any arbitrage rebate due under Section 148(f) of the Internal Revenue Code of 1986, as amended, must be used from time to time, at least annually, as and to the extent available to redeem outstanding bonds prior to maturity in the order of priority set forth below.

So long as there are no Additional Parity Bonds outstanding, the City shall apply 100% of the Surplus Pledged Revenues to the redemption of the Series 2021B Bonds. Thereafter, Surplus Pledged Revenues shall be applied to the redemption of the Series 2021B Bonds and the Additional Parity Bonds ratably (based on relative outstanding principal amounts).

In the case of any defeasance of the Series 2021B Bonds, redemption of defeased Series 2021B Bonds shall be scheduled on the basis of the mandatory redemption requirements set forth above and assuming collections of the Tax in an amount equal to receipts for the most recent twelve-month period prior to the defeasance being authorized by the City.

(2) The Series 2021B Bonds are subject to redemption at the option of the City from funds from any source, on and after November 1, 2028, in whole or in part at any time, at a redemption price equal to the principal amount being redeemed, plus accrued interest to the redemption date.

If fewer than all of the Series 2021B Bonds shall be called for redemption, the particular maturities and interest rates of the Series 2021B Bonds to be redeemed shall be selected by the City in its discretion. If fewer than all of the Series 2021B Bonds of any one maturity and interest rate shall be called for redemption, the particular Series 2021B Bonds or portion thereof to be redeemed from such maturity and interest rate shall be selected by lot by the Trustee.

(3) To the extent not previously redeemed, the Series 2021B Bonds maturing on November 1 in the years 20__ and 20__ are subject to mandatory sinking fund redemption by lot in such manner as the Trustee shall determine, on November 1 in the years and in the amounts set forth below, at a redemption price equal to the principal amount being redeemed plus accrued interest to the date of redemption:

Series 2021B Bonds Maturing November 1, 20__

Year (November 1)	Principal Amount

Series 2021B Bonds Maturing November 1, 20__

Year (November 1)	Principal Amount

In case any outstanding Series 2021B Bond is in a denomination greater than $5,000, each $5,000 of face value of such Series 2021B bond shall be treated as a separate Series 2021B bond of the denomination of $5,000.

Notice of redemption identifying the Series 2021B Bonds or portions thereof (which shall be $5,000 or a multiple thereof) to be redeemed and the date they shall be presented for payment shall be given by the Trustee, not less than 30 nor more than 60 days prior to the date fixed for redemption, by sending a copy of the redemption notice by first class mail, postage prepaid, or other acceptable standard means of delivery, including facsimile or electronic communication, to all registered owners of 2021B Bonds to be redeemed. Failure to send an appropriate notice or any such notice to one or more registered owners of Series 2021B Bonds to be redeemed shall not affect the validity of the proceedings for redemption of other Series 2021B Bonds as to which notice of redemption is duly given in proper and timely fashion. All such Series 2021B Bonds or portions thereof thus called for redemption and for the retirement of which funds are duly provided in accordance with the Authorizing Ordinance prior to the date fixed for redemption will cease to bear interest on such redemption date.

This bond is transferable by the Registered Owner shown above in person or by his attorney-in-fact duly authorized in writing at the principal corporate trust office of the Trustee, but only in the manner, subject to the limitations and upon payment of the charges provided in the Authorizing Ordinance, and upon surrender and cancellation of this bond. Upon such transfer a new fully registered bond or bonds of the same maturity, interest rate and series, of authorized denomination or denominations, for the same aggregate principal amount, will be issued to the transferee in exchange therefor. This bond is issued with the intent that the laws of the State shall govern its construction.

The City and the Trustee may deem and treat the Registered Owner shown above as the absolute owner hereof for the purpose of receiving payment of or on account of principal hereof and interest due hereon and for all other purposes, and neither the City nor the Trustee shall be affected by any notice to the contrary.

The bonds are issuable only as fully registered bonds in the denomination of $5,000, and any integral multiple thereof. Subject to the limitations and upon payment of the charges provided in the Authorizing Ordinance, fully registered bonds may be exchanged for a like aggregate principal amount of fully registered bonds of the same maturity, interest rate and series of other authorized denominations.

This bond shall not be valid until it shall have been authenticated by the Certificate hereon duly signed by the Trustee.

IT IS HEREBY CERTIFIED, RECITED AND DECLARED that all acts, conditions and things required to exist, happen and be performed, under the Constitution and laws of the State, particularly Amendment No. 62 to the Constitution of the State and the Authorizing Legislation, precedent to and in the issuance of this bond have existed, have happened and have been performed in due time, form and manner as required by law; that the indebtedness represented by this bond and the issue of which it forms a part does not exceed any constitutional or statutory limitation; and that a tax sufficient to pay the bonds and interest thereon has been duly pledged in accordance with the Authorizing Legislation and made payable until all of the bonds and interest thereon have been fully paid and discharged.

IN WITNESS WHEREOF, the City of Bentonville, Arkansas has caused this bond to be executed by its Mayor and City Clerk and its corporate seal to be impressed or imprinted on this bond, all as of the Dated Date shown above.

ATTEST: CITY OF BENTONVILLE, ARKANSAS

_____ _____

City Clerk Mayor

(SEAL)

(Form of Trustee's Certificate)

TRUSTEE'S CERTIFICATE OF AUTHENTICATION

This bond is one of the Series 2021B Bonds issued under the provisions of the within mentioned Authorizing Ordinance.

Date of Authentication: _____.

SIMMONS BANK
Pine Bluff, Arkansas
TRUSTEE

By _____
Authorized Signature

(A form of assignment shall be attached to each Series 2021B Bond.)

Section 6. The City hereby expressly pledges and appropriates all of the revenues from the City's 1% sales and use tax levied by Ordinance No. 2003-108 adopted June 24, 2003, as amended by Ordinance No. 2021-47 adopted February 9, 2021 (the "Tax") received by the City after the 2021 Bonds are issued (the "Pledged Revenues"), to the payment of the principal of and interest on the bonds when due at maturity or at redemption prior to maturity and to the payment of the Trustee's fees and expenses and other administrative charges and any arbitrage rebate due under Section 148 of the Internal Revenue Code of 1986, as amended (the "Code"). The City covenants that the Tax shall never be repealed or reduced while any of the bonds are outstanding. The City further covenants to use due diligence in collecting the Tax. Nothing herein shall prohibit the City from increasing the Tax from time to time, to the extent permitted by law, and no part of the revenues derived from any such increase shall become part of the revenues pledged hereunder.

Section 7. (a) The City hereby designates Simmons Bank, Pine Bluff, Arkansas as the bank which shall receive collections of the Tax from the State Treasurer and the City covenants to file a written designation thereof with the State Treasurer prior to the issuance of the 2021 Bonds. The Trustee shall deposit all collections of the Tax as and when received into a special fund of the City in the Trustee which is hereby created and designated "Sales and Use Tax Revenue Fund" (the "Revenue Fund"). There is created in the Revenue Fund the following accounts: Bond Account and Surplus Revenues Account. Eighty percent (80%) of the Pledged Revenues shall be deposited as and when received by the Trustee into the Bond Account. The balance of the Pledged Revenues shall be deposited into the Surplus Revenues Account.

(b) Moneys in the Bond Account shall, within two (2) days of receipt, be transferred to the following accounts each month, in the following order of priority:

(1) 1/6 of the interest on the bonds next due - Debt Service Account in the Bond Fund (hereinafter identified); and

(2) 1/12 of the principal of the bonds next due at maturity or upon mandatory sinking fund redemption - Debt Service Account in the Bond Fund; and

(3) the Trustee's fees and expenses and other administrative charges next due - Expense Account in the Bond Fund; and

(4) the amount which may be necessary to increase the Debt Service Reserve Account to the required level - Debt Service Reserve Account in the Bond Fund; and

(5) the amount necessary to pay any arbitrage rebate due under Section 148(f) of the Internal Revenue Code of 1986, as amended (the "Code") - Expense Account in the Bond Fund; and

(6) balance - the Special Redemption Account in the Bond Fund.

Notwithstanding the above, (a) the deposits made into the Debt Service Account in the Bond Fund shall be reduced in order to take into account as a credit (i) interest earnings and (ii) transfers from the Debt Service Reserve Account, (b) deposits shall be made into the Debt Service Account until November 2021 and (c) the deposits into the Debt Service Account shall be increased as needed in order to make up any deficiencies in prior months' deposits.

(c) Moneys in the Surplus Revenues Account shall be applied by the Trustee within two (2) business days of receipt by the Trustee in the following order of priority:

(1) in the event moneys in the Bond Account are insufficient to make the deposits required by clauses (1) through (5) of (b) above, moneys in the Surplus Revenues Account shall be used for such purpose in the order of priority listed above; and

(2) the balance shall be transferred to the City for the City to use for any lawful purposes.

Section 8. (a) There is hereby created a special fund of the City in the Trustee which is designated "Sales and Use Tax Bond Fund, Series 2021" (the "Bond Fund"), for the purpose of providing funds for the payment of principal of and interest on the bonds as they become due at maturity or at redemption prior to maturity, the Trustee's fees and expenses and other administrative charges and any arbitrage rebate due the United States under Section 148(f) of the Code. There shall be established in the Bond Fund the following accounts into which money from the Revenue Fund shall be deposited monthly: (i) Debt Service Account; (ii) Special Redemption Account; and (iii) Expense Account. Moneys in the Bond Fund shall be used on each interest payment date in the following order of priority as and when necessary:

(1) to pay the interest on the bonds then due; and

(2) to pay the principal of the bonds then due at maturity or upon mandatory sinking fund redemption; and

(3) to make provision in the Bond Fund for payment of one-half of the principal next due at maturity or upon mandatory sinking fund redemption on the bonds if principal is not due on such interest payment date; and

(4) to pay into the Debt Service Reserve Account (hereinafter identified) any moneys necessary to increase the Debt Service Reserve Account to the required level; and

(5) to pay the Trustee's fees and expenses and other administrative charges then due; and

(6) to make any arbitrage rebate payment due under Section 148(f) of the Code; and

(7) to redeem bonds prior to maturity.

Notwithstanding the above, (i) any arbitrage rebate shall be paid not later than the date due, and (ii) a bond redemption payment may occur on any authorized redemption date as set forth in the bonds, in each case whether or not such date is an interest payment date.

The Bond Fund (excluding those moneys in the Debt Service Reserve Account) shall, except as provided in this Section, be depleted once a year except for a carryover amount not to exceed the greater of (i) one year's earnings on the Bond Fund or (ii) 1/12 of the annual debt service on the bonds. Any moneys in the Bond Fund shall, except as provided in this Section, be spent for one of the above purposes within a thirteen-month period beginning on the date of deposit, and any amount received from investment of money held in the Bond Fund will be spent within a one-year period beginning on the date of receipt.

(b) There shall be established and maintained in the Bond Fund a Debt Service Reserve Account in an amount equal to one-half of the maximum annual principal and interest requirements on the bonds (the "required level"). The City shall calculate the required level for the Debt Service Reserve Account from time to time as bonds are issued and to fund any required increases at those times. Moneys in the Debt Service Reserve Account shall be used to make the payments described in clauses (1) and (2) of subsection (a) above if moneys in the Bond Fund are not otherwise sufficient for that purpose. Moneys in the Debt Service Reserve Account over and above the required level shall be immediately transferred from the Debt Service Reserve Account into the Debt Service Account in the Bond Fund. Moneys in the Debt Service Reserve Account shall be used to make the final payment of principal and interest on the bonds.

(c) There shall be established and maintained in the Bond Fund a Special Redemption Account into which shall be deposited all funds in the Bond Fund available for the redemption of the bonds arising from Surplus Pledged Revenues and any transfers made pursuant to Section 15 of this Ordinance. Moneys in the Special Redemption Account shall be used on the next available date for the purpose of redeeming bonds in accordance with clause (7) of subsection (a) of this Section 8 and with Section 11 of this Ordinance.

(d) When the moneys in the Bond Fund, including the Debt Service Reserve Account and the Special Redemption Account, shall be and remain sufficient to pay (1) the principal of all the bonds then outstanding, (2) interest on the bonds until the next interest payment date, (3) the Trustee's fees and expenses and other administrative charges, and (4) all arbitrage rebate payments due the United States under Section 148(f) of the Code, there shall be no obligation to make any further payments into the Bond Fund and any Pledged Revenues remaining in the Bond Fund after the principal of, premium, if any and interest on the bonds have been paid may be used by the City for any lawful purpose.

(e) The Trustee is authorized and directed to withdraw moneys from the Bond Fund from time to time as necessary for paying principal of and interest on the bonds when due at maturity or at redemption prior to maturity and for making other Bond Fund expenditures authorized hereby.

(f) The bonds shall be specifically secured by a pledge of the Pledged Revenues, which pledge in favor of the bonds is hereby irrevocably made according to the terms of this Ordinance, and the City, and the officers and employees of the City, shall execute, perform and carry out the terms thereof in strict conformity with the provisions of this Ordinance.

(g) Anything herein to the contrary notwithstanding, moneys in the Special Redemption Account and interest earnings thereon (1) shall be used from time to time to make up shortfalls in the Bond Fund, rather than redeeming bonds prior to maturity, and (2) shall not be used to redeem bonds more often than annually (rather than on each interest payment date) if the Trustee reasonably determines that such amounts available for redemption may be needed to make scheduled debt service payments.

Section 9. Any bond shall be deemed to be paid within the meaning of this Ordinance when payment of the principal of and interest on such bond (whether at maturity or upon redemption as provided herein, or otherwise), either (i) shall have been made or caused to be made in accordance with the terms hereof, or (ii) shall have been provided for by irrevocably depositing with the Trustee, in trust and irrevocably set aside exclusively for such payment (1) cash sufficient to make such payment and/or (2) Government Securities as defined in Section 16 hereof that are direct obligations of the United States of America (provided that such deposit will not cause any of the Series 2021B Bonds or any Additional Parity Bonds issued as tax-exempt bonds to be classified as "arbitrage bonds" within the meaning of the Code), maturing as to principal and interest in such amounts and at such times as will provide sufficient moneys to make such payment, and all necessary and proper fees, compensation and expenses of the Trustee with respect to which such deposit is made shall have been paid or the payment thereof provided for to the satisfaction of the Trustee.

In case of any defeasance of the bonds, redemption of defeased bonds shall be scheduled on the basis of the mandatory redemption requirements and assuming annual collections of the Tax in an amount equal to receipts for the most recent twelve-month period prior to the defeasance being authorized by the City.

On the payment of any bonds within the meaning of this Ordinance, the Trustee shall hold in trust, for the benefit of the owners of such bonds, all such moneys and/or Government Securities.

When all the bonds shall have been paid within the meaning of this Ordinance, if the Trustee has been paid its fees and expenses, and if all arbitrage rebate due the United States under Section 148(f) of the Code has been paid or provided for to the satisfaction of the Trustee, the Trustee shall take all appropriate action to cause (i) the pledge and lien of this Ordinance to be discharged and cancelled, and (ii) all moneys held by it pursuant to this Ordinance and which are not required for the payment of such bonds to be paid over or delivered to or at the direction of the City.

Section 10. The City covenants that it will not issue any additional bonds, or incur any additional obligations secured by a lien on or pledge of the Pledged Revenues except as hereinafter provided. The City may issue bonds or incur obligations, on a parity with the lien on the Pledged Revenues securing the 2021 Bonds ("Additional Parity Bonds"). The Additional Parity Bonds may be issued so long as the City has received collections from Tax for the 12 month period ending on the last day of the month preceding the date that the Additional Parity Bonds are authorized by the City to be issued, in an amount equal to or in excess of 125% of the maximum annual debt service for the 2021 Bonds, any outstanding Additional Parity Bonds and the Additional Parity Bonds proposed to be issued. Notwithstanding the above, nothing herein shall be construed to prohibit the City from refunding any bonds and pledging the Pledged Revenues to the refunding bonds on a parity with the non-refunded bonds and such refunding bonds shall be a part of the Additional Parity Bonds hereunder.

Section 11. The Series 2021B Bonds shall be callable for payment prior to maturity in accordance with the terms set out in the Series 2021B Bond form set forth in Section 5 of this Ordinance (the "Bond Form"). The City hereby covenants to use Series 2021B Bond proceeds not necessary for the purposes intended to redeem Series 2021B Bonds on the first available interest payment date. The City further covenants to use Surplus Pledged Revenues (as defined in the Bond Form) to redeem bonds prior to maturity on the first available interest payment date in accordance with clause (7) of Section 8(a) of this Ordinance and as set forth in the Bond Form.

Section 12. It is hereby covenanted and agreed by the City with the owners of the bonds that the City will faithfully and punctually perform all duties with reference to the Tax and the bonds required by the Constitution and laws of the State and by this Ordinance, including the collection of the Tax, as herein specified and covenanted and the applying of the Pledged Revenues as herein provided.

Section 13. The Trustee will keep or cause to be kept proper books of accounts and records in which complete and correct entries shall be made of all transactions relating to the

Pledged Revenues and such books shall be available for inspection by the City, the Purchaser and the owner of any of the bonds at reasonable times and under reasonable circumstances. The Trustee shall furnish a report to the City on a monthly basis of all receipts and disbursements of the Pledged Revenues received by the Trustee, which monthly report shall commence one month following the first month in which the Pledged Revenues are received by the Trustee.

Section 14. (a) If there be any default in the payment of the principal of and interest on any of the bonds, or if the City defaults in the performance of any covenant contained in this Ordinance, the Trustee may, and shall, upon the written request of the owners of not less than 25% in principal amount of the bonds then outstanding, by proper suit compel the performance of the duties of the officials of the City under the Constitution and laws of the State and under this Ordinance, and to take any action or obtain any proper relief in law or equity available under the Constitution and laws of the State.

(b) No owner of any bond shall have any right to institute any suit, action, mandamus or other proceeding in equity or in law for the protection or enforcement of any right under this Ordinance or under the Constitution and laws of the State unless previously shall have given to the Trustee written notice of the default on account of which such suit, action or proceeding is to be taken, and unless the owners of not less than 25% in principal amount of the bonds then outstanding shall have made written request of the Trustee after the right to exercise such powers or right of action, as the case may be, shall have accrued, and shall have afforded the Trustee a reasonable opportunity either to proceed to exercise the powers herein granted or granted by the Constitution and laws of the State, or to institute such action, suit or proceeding in its name, and unless, also, there shall have been offered to the Trustee reasonable security and indemnity against the cost, expense and liabilities to be incurred therein or thereby and the Trustee shall have refused or neglected to comply with such request within a reasonable time, and such notification, request and offer of indemnity are hereby declared in every such case, at the option of the Trustee, to be conditions precedent to the execution of the powers and trust of this Ordinance or to any other remedy hereunder. It is understood and intended that no one or more owners of the bonds shall have any right in any manner whatever by his or their action to affect, disturb or prejudice the security of this Ordinance, or to enforce any right hereunder except in the manner herein provided, that all proceedings at law or in equity shall be instituted, had and maintained in the manner herein provided and for the benefit of all owners of the outstanding bonds, and that any individual rights of action or other right given to one or more of such owners by law are restricted by this Ordinance to the rights and remedies herein provided.

(c) All rights of action under this Ordinance or under any of the bonds, enforceable by the Trustee, may be enforced by it without the possession of any of the bonds, and any such suit, action or proceeding instituted by the Trustee shall be brought in its name and for the benefit of all the owners of the bonds, subject to the provisions of this Ordinance.

(d) No remedy herein conferred upon or reserved to the Trustee or to the owners of the bonds is intended to be exclusive of any other remedy or remedies herein provided, and each and every such remedy shall be cumulative and shall be in addition to every other remedy given hereunder or given by any law or by the Constitution of the State.

(e) No delay or omission of the Trustee or of any owners of the bonds to exercise any right or power accrued upon any default shall impair any such right or power or shall be construed to be a waiver of any such default or an acquiescence therein, and every power and remedy given by this Ordinance to the Trustee and to the owners of the bonds, respectively, may be exercised from time to time and as often as may be deemed expedient.

(f) The Trustee may, and upon the written request of the owners of not less than a majority of the owners in principal amount of the bonds then outstanding shall waive any default which shall have been remedied before the entry of final judgment or decree in any suit, action or proceeding instituted under the provisions of this Ordinance or before the completion of the enforcement of any other remedy, but no such waiver shall extend to or affect any other existing or any subsequent default or defaults or impair any rights or remedies consequent thereon.

Section 15. (a) When the Series 2021A Bonds have been executed and sealed as herein provided, they shall be delivered to the Trustee, which shall authenticate them and deliver them to or at the direction of the Purchaser upon payment of the 2021A Purchase Price. The amount from the 2021A Purchase Price necessary to fund the portion of the Debt Service Reserve Account allocable to the 2021A Bonds, as set forth in the delivery instructions to the Trustee signed by the Mayor and City Clerk (the "Delivery Instructions"), shall be deposited into the Debt Service Reserve Account. An amount of the 2021A Purchase Price that is sufficient, along with other available moneys, to accomplish the refunding of the Bonds Advance Refunded shall be deposited into an escrow fund established with the trustee for the Bonds Refunded. The expenses of issuing the Series 2021A Bonds as set forth in the Delivery Instructions shall be paid from the 2021A Purchase Price. The balance of the 2021A Purchase Price shall be deposited into the Street Construction Fund established below.

(b) When the Series 2021B Bonds have been executed and sealed as herein provided, they shall be delivered to the Trustee, which shall authenticate them and deliver them to or at the direction of the Purchaser upon payment of the 2021B Purchase Price. The amount from the 2021B Purchase Price necessary to fund the portion of the Debt Service Reserve Account allocable to the 2021B Bonds, as set forth in the Delivery Instructions, shall be deposited into the Debt Service Reserve Account. The expenses of issuing the Series 2021B Bonds as set forth in the Delivery Instructions shall be paid from the 2021B Purchase Price.

An amount of the 2021B Purchase Price that is sufficient, along with other available moneys, to accomplish the refunding of the Bonds Current Refunded shall be transferred to the trustee for the Bonds Refunded and used to redeem the Bonds Current Refunded.

The balance of the 2021B Purchase Price shall be deposited in seven special funds of the City in the Trustee hereby created and designated "Street Construction Fund," "Park and Recreational Construction Fund," "Fire Department Construction Fund," "Police Department Construction Fund," "Library Construction Fund," "Drainage Construction Fund," and "Radio Communication Construction Fund" (each a "2021 Construction Fund" and collectively, the "2021 Construction Funds"). The proceeds of the Series 2021B Bonds to be deposited into the 2021 Construction Funds shall be allocated among the 2021B Improvements in proportion to the principal amount of Series 2021B Bonds allocated for each purpose. The moneys in each 2021 Construction Fund shall be used for accomplishing the 2021B Improvements for which the fund was created, paying expenses incidental thereto and paying the expenses of issuing the Series 2021B Bonds. Issuance costs and other expenses not specific to one purpose shall be joint obligations to be paid from each 2021 Construction Fund in proportion to the initial moneys credited thereto. Disbursements shall be made from the each 2021 Construction Fund on the basis of requisitions which shall specify: the name of the person, firm or corporation to whom payment is to be made; the amount of the payment; the purpose of the payment; the account from which the payment is to be made; and that the payment is a proper charge on the respective 2021 Construction Fund. Each requisition must be signed manually or electronically by the Finance Director and the Assistant Finance Director. The Trustee shall issue its check to the person, firm or corporation designated in the requisition. The Trustee shall keep records as to all payments made from each 2021 Construction Fund based upon requisitions.

When the 2021 Improvements of a particular type (e.g., Drainage Improvements) have been completed and all required expenses have been paid and expenditures made from the 2021 Construction Fund established to accomplish such 2021 Improvements and the financing thereof, this fact shall, if moneys remain in such 2021 Construction Fund, be evidenced by a certificate signed by the Mayor, which certificate shall state, among other things, the date of the completion and that all obligations payable from such 2021 Construction Fund have been discharged. A copy of the certificate shall be filed with the Trustee, and upon receipt thereof the Trustee shall transfer the remaining balance into the Special Redemption Account in the Bond Fund. Proceeds of the Series 2021B Bonds not needed for the purposes intended shall only be used to redeem Series 2021B Bonds.

Section 16. (a) Moneys held for the credit of the 2021 Construction Funds may be invested and reinvested in Permitted Investments or other investments permitted by Arkansas law which shall mature, or which shall be subject to redemption by the holder thereof, at the option of such holder, not later than the date or dates when such money will be required for the purposes intended.

(b) Moneys held for the credit of the Debt Service Reserve Account shall be invested and reinvested in Permitted Investments, which shall mature, or which shall be subject to redemption by the holder thereof, at the option of such holder, not later than the earlier of (i) the final maturity date of the bonds that are outstanding on the date of the investment or (ii) five (5) years.

(c) Moneys held for the credit of the Bond Fund (other than the Debt Service Reserve Account) and the Revenue Fund shall be invested and reinvested in Permitted Investments, which

will mature, or which will be subject to redemption by the holder thereof at the option of the holder, not later than the date or dates on which the money shall be required for the payment of the principal of and interest on the bonds when due.

(d) Obligations purchased as an investment of any fund or account shall be deemed at all times a part of such fund. Any profit or loss realized on investments of moneys in any fund shall be charged to said fund.

(e) The Trustee shall so invest and reinvest pursuant to the direction of the City and in the Trustee's discretion in the absence of any direct instructions from the City.

(f) "Permitted Investments" are defined as (i) direct or fully guaranteed obligations of the United States of America ("Government Securities"), (ii) direct obligations of an agency, instrumentality or government-sponsored enterprise created by an act of the United States Congress and authorized to issue securities or evidences of indebtedness, regardless of whether the securities or evidences of indebtedness are guaranteed for repayment by the United States Government, (iii) certificates of deposit or demand deposits of banks, including the Trustee, which are insured by Federal Deposit Insurance Corporation or, if in excess of insurance coverage, collateralized by Government Securities or other securities authorized by Arkansas law to secure public funds or (iv) money market funds invested exclusively in Government Securities and the obligations described in (ii) above.

Section 17. Simmons Bank is hereby appointed to act as Trustee and Paying Agent pursuant to this Ordinance. The Trustee shall be responsible for the exercise of good faith and reasonable prudence in the execution of its trusts. The recitals in this Ordinance and in the bonds are the recitals of the City and not of the Trustee. The Trustee shall not be required to take any action as Trustee unless it shall have been requested to do so in writing by the owners of not less than 25% in principal amount of bonds then outstanding and shall have been offered reasonable security and indemnity against the costs, expenses and liabilities to be incurred therein or thereby. The Trustee may resign by giving 60 days' notice in writing to the City Clerk and the owners of the bonds. The majority in principal amount of the owners of the outstanding bonds or the City, so long as it is not in default under this Ordinance, at any time, with or without cause, may remove the Trustee. In the event of a vacancy in the office of Trustee, the City shall forthwith designate a new Trustee by a written instrument filed with the City Clerk. The new Trustee shall be a bank or a trust company duly authorized to exercise trust powers and subject to examination by federal or state authority, having a reported capital and surplus of not less than $50,000,000. The preceding criteria may be met by a parent corporation if the parent corporation has guaranteed the obligations of the successor trustee. The Trustee and any successor Trustee shall file a written acceptance and agreement to execute the trusts imposed upon it by this Ordinance, but only upon the terms and conditions set forth in this Ordinance and subject to the provisions of this Ordinance, to all of which the respective owners of the bonds agree. Such written acceptance shall be filed with the City Clerk and a copy thereof shall be placed in the bond transcript. Any successor Trustee shall have all the powers herein granted to the original Trustee. Notwithstanding the above, no removal, resignation or termination shall take effect until the acceptance of the trusts by the successor Trustee.

Section 18. (a) The terms of this Ordinance shall constitute a contract between the City and the owners of the bonds and no variation or change in the undertaking herein set forth shall be made while any of the bonds are outstanding, except as hereinafter set forth in subsections (b) and (c).

(b) The Trustee may consent to any variation or change in this Ordinance that the Trustee determines is not to the material prejudice of the owners of the bonds or in order to cure any ambiguity, formal defect or omission in this Ordinance or any amendment hereto or in connection with the issuance of the Additional Parity Bonds, without the consent of the owners of the bonds.

(c) The owners of not less than 75% in aggregate principal amount of the bonds then outstanding shall have the right, from time to time, anything contained in this Ordinance to the contrary notwithstanding, to consent to and approve the adoption by the City of such ordinance supplemental hereto as shall be necessary or desirable for the purpose of modifying, altering, amending, adding to or rescinding, in any particular, any of the terms or provisions contained in this Ordinance or in any supplemental ordinance; provided, however, that nothing contained in this Section shall permit or be construed as permitting (1) an extension of the maturity of the principal of or the interest on any bond, or (2) a reduction in the principal amount of any bond or the rate of interest thereon, or (3) the creation of a pledge of the Pledged Revenues superior to the pledge created by this Ordinance, or (4) a privilege or priority of any bond or bonds over any other bond or bonds, or (5) a reduction in the aggregate principal amount of the bonds required for consent to such supplemental ordinance.

Section 19. (a) The City covenants that it shall not take any action or suffer or permit any action to be taken or condition to exist which causes or may cause the interest payable on the Series 2021B Bonds to be included in gross income for federal income tax purposes. Without limiting the generality of the foregoing, the City covenants that the proceeds of the sale of the Series 2021B Bonds and the Pledged Revenues will not be used directly or indirectly in such manner as to cause the Series 2021B Bonds to be treated as "arbitrage bonds" within the meaning of Section 148 of the Code.

(b) The City represents that it has not used or permitted the use of, and covenants that it will not use or permit the use of the 2021B Improvements or the improvements financed by the Bonds Current Refunded (the "Refunded Improvements") or the proceeds of the Series 2021B Bonds or the Bonds Current Refunded, in such manner as to cause the Series 2021B Bonds to be "private activity bonds" within the meaning of Section 141 of the Code. In this regard, the City covenants that (i) it will not use (directly or indirectly) the proceeds of the Series 2021B Bonds to make or finance loans to any person, and (ii) that while the bonds are outstanding the 2021B Improvements and the Refunded Improvements will only be used by state or local governmental entities or persons on a basis as members of the general public.

(c) The City shall pay any arbitrage rebate due the United States Treasury under Section 148 of the Code from moneys in the Bond Fund. The costs of calculating the arbitrage rebate due and the arbitrage rebate amount shall be considered to be administrative costs payable from moneys in the Bond Fund.

(d) The City covenants that it will not reimburse itself from proceeds of the Series 2021B Bonds for any costs paid prior to the date the Series 2021B Bonds are issued except in compliance with United States Treasury Regulation § 1.150-2 (the "Regulation"). This Ordinance shall be considered an "official intent" for purposes of the Regulation.

(e) The City will retain all documents and records pertaining to the Series 2021B Bonds and the 2021 Improvements for the life of the Series 2021B Bonds plus an additional three years.

Section 20. The City covenants that it will take no action which would cause the Series 2021B Bonds to be "federally guaranteed" within the meaning of Section 149(b) of the Code. The City further covenants that it will submit to the Secretary of the Treasury of the United States, not later than the 15th day of the second calendar month after the close of the calendar quarter in which the Series 2021B Bonds are issued, a statement concerning the Series 2021B Bonds which contains the information required by Section 149(e) of the Code.

Section 21. The Disclosure Agreement, in substantially the form submitted to this meeting, is approved, and the Mayor is hereby authorized and directed to execute and deliver the Disclosure Agreement for and on behalf of the City. The Mayor is authorized and directed to take all action required on the part of the City to fulfill the City's obligations under the Disclosure Agreement. Any legal fees and other administrative costs incurred by the City in connection with making the annual report pursuant to the Disclosure Agreement (except audit fees) shall be considered administrative charges that may be payable from moneys in the Bond Fund.

Section 22. All moneys in the Sales and Use Tax Bond Fund, Series 2007 established by Ordinance No. 2007-118, adopted October 9, 2007 are hereby appropriated and shall either (a) be used to accomplish the refunding of the Bonds Refunded, (b) be used to pay any arbitrage rebate expenses with respect to the Bonds Refunded, or (c) be deposited into the Revenue Fund and become a part of the Pledged Revenues hereunder, all in accordance with the Delivery Instructions.

Section 23. The refunding of the Bonds Refunded shall be accomplished and the Mayor and City Clerk are hereby authorized and directed to execute and deliver all necessary contracts and documents, including escrow deposit agreement or agreements between the City and the trustee for the Bonds Refunded. The Bonds Refunded shall be redeemed from time to time on the earliest available date or dates.

Section 24. The Mayor, and other officers of the City in accordance with their offices, are authorized to execute such writings and take such action as may be appropriate to cause the 2021 Bonds to be issued.

Section 25. (a) The principal amount of the Series 2021A Bonds will be allocated on the date the 2021 Bonds are issued following a determination of the amount of funds to be used

for the refunding of the Bonds Advance Refunded in accordance with Sections 15 and 22 hereof. The allocation shall be evidenced by a certificate signed by the Mayor and City Clerk and a copy of the Certificate shall be placed in the 2021 Bond transcript. The final allocation shall be based approximately, after taking into account issuance costs and rounding amounts, upon these initial allocations of principal amounts: (1) $_____ for the Street Improvements; and (2) $_____ for the refunding of the Bonds Advance Refunded. The initial allocations have been determined based upon $_____ being available from funds on hand for the refunding of the Bonds Advance Refunded. An increase in such amount shall cause a lower allocation of the principal amount for the refunding of the Bonds Advance Refunded and a greater allocation of the principal amount for the Street Improvements. A decrease in such amount shall cause a higher allocation of the principal amount for the refunding of the Bonds Advance Refunded and a lower allocation of the principal amount for the Street Improvements.

(b) The principal amount of the Series 2021B Bonds plus any net original issue premium will be allocated on the date the 2021 Bonds are issued following a determination of the amount of funds to be used for the refunding of the Bonds Current Refunded in accordance with Sections 15 and 22 hereof. The allocation shall be evidenced by a certificate signed by the Mayor and City Clerk and a copy of the Certificate shall be placed in the 2021 Bond transcript. The final allocation shall be based approximately, after taking into account issuance costs and rounding amounts, upon these initial allocations of principal amounts: (1) $_____ for the Street Improvements; (2) $_____ for the Drainage Improvements; (3) $_____ for the Radio Communication Improvements; (4) $_____ for the Library Improvements; (5) $_____ for the Fire Department Improvements; (6) $_____ for the Police Department Improvements; (7) $_____ for the Park and Recreational Improvements; and (8) $_____ for the refunding of the Bonds Current Refunded. The initial allocations have been determined based upon $_____ being available from funds on hand for the refunding of the Bonds Current Refunded. An increase in such amount shall cause a lower allocation of the principal amount for the refunding of the Bonds Current Refunded and a greater allocation of the principal amount for the Street Improvements. A decrease in such amount shall cause a higher allocation of the principal amount for the refunding of the Bonds Current Refunded and a lower allocation of the principal amount for the Street Improvements.

Section 26. Notice of the adoption of this Ordinance shall be posted at Bentonville Public Library, Bentonville City Hall, Bentonville Community Center, Bentonville Community Development Building and Bentonville Police Department, being five of the most public places in the City.

Section 27. The provisions of this Ordinance are separable and in the event that any section or part hereof shall be held to be invalid, such invalidity shall not affect the remainder of this Ordinance.

Section 28. All ordinances and resolutions and parts thereof in conflict herewith are hereby repealed to the extent of such conflict.

Section 29. It is hereby ascertained and declared that the 2021B Improvements are immediately needed for the preservation of the public peace, health and safety and to remove existing hazards thereto. The 2021B Improvements cannot be accomplished without the issuance

of the 2021 Bonds, which cannot be sold at the interest rates specified herein unless this Ordinance is immediately effective. Therefore, it is declared that an emergency exists and this Ordinance being necessary for the preservation of the public peace, health and safety shall be in force and take effect immediately upon and after its passage.

PASSED: _____, 2021.

APPROVED:

ATTEST:

_____
Mayor

_____
City Clerk

(SEAL)

CERTIFICATE

The undersigned, City Clerk of the City of Bentonville, Arkansas (the "City"), hereby certifies that the foregoing pages are a true and correct copy of Ordinance No. _____, passed at a regular session of the City Council of the City, held at the regular meeting place of the City Council at ____ p.m. on the _____ day of _____, 2021, and that the Ordinance is of record in Ordinance Record Book No. _____ at Page _____, now in my possession.

GIVEN under my hand and seal this _____ day of _____, 2021.

_____
City Clerk

(SEAL)